MITSUBISHI ELECTRIC

Changes for the Better

Automating the World

FACTORY AUTOMATION

AC Servo System MELSERVO-J5

Innovate Together



MITSUBISHI ELECTRIC SERVO SYSTEM

MELSERVO-J5







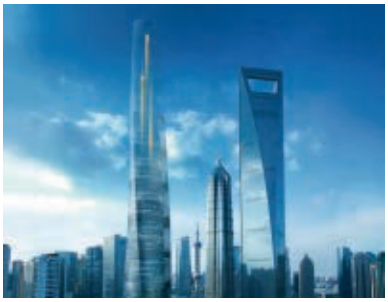



Our Factory Automation business is focused on "Automating the World" to make it a better, more sustainable environment supporting manufacturing and society, celebrating diversity and contributing towards an active and fulfilling role.

Mitsubishi Electric is involved in many areas including the following:

Energy and Electric Systems
A wide range of power and electrical products from generators to large-scale displays.

Electronic Devices
A wide portfolio of cutting-edge semiconductor devices for systems and products.

Home Appliance
Dependable consumer products like air conditioners and home entertainment systems.

Information and Communication Systems
Commercial and consumer-centric equipment, products and systems.

Industrial Automation Systems
Maximizing productivity and efficiency with cutting-edge automation technology.

SUSTAINABLE DEVELOPMENT GOALS

The Mitsubishi Electric Group is actively solving social issues, such as decarbonization and labor shortages, by providing production sites with energy-saving equipment and solutions that utilize automation systems, thereby helping towards a sustainable society.

Contents

OVERVIEW

■ Concept ····· 4

■ Product Lines ····· 10

■ Servo System ····· 16

■ Servo System Controllers ····· 26

■ Embedded Type Servo System Controller ····· 62

■ MELSERVO-J5 ····· 76

■ Utilization of SSCNET III/H Device Assets ····· 108

■ Powered by e-F@ctory ····· 114

■ Mitsubishi Electric Partners/FA Global Website ····· 115

■ Common Specifications (Combinations of Servo Motors and Servo Amplifiers, etc.) ····· 1-1

■ Product Specifications of Servo System Controllers ····· 2-1

■ MELSERVO-J5 Product Specifications

Servo Amplifiers ····· 3-1
Rotary Servo Motors ····· 4-1
Linear Servo Motors ····· 5-1
Direct Drive Motors ····· 6-1
Options/Peripheral Equipment ····· 7-1
Low-Voltage Switchgear/Wires ····· 8-1

■ Product List ····· 9-1

■ Precautions ····· 10-1

■ Support ····· 11-1

Compliance with the indicated global standards and regulations is current as of the release date of this catalog.
Contact your local sales office for the latest information.



Create new value with MELSERVO-J5. Unlock performance with a total drive solution.

Maximize system performance



Progressiveness

For evolution of machines

- Performance improvement
- Program standardization

Connectivity

For flexible system configurations

- Integration with connectable devices

Usability

For quick operation start

- Tool enhancement
- Improved drive system usability

Maintainability

For prompt detection and diagnosis of failures

- Predictive/preventative maintenance
- Corrective maintenance
- Maintenance cost reduction

Heritage

For utilization of existing devices

- Interchangeability with previous generation models

Create a cutting-edge servo system together with MELSERVO-J5

Maximize the performance of your system and equipment with MELSERVO-J5 total drive solutions

Progressiveness

For evolution of machines

The dramatically improved basic performance of MELSERVO-J5 and CC-Link IE TSN enable total drive solutions that help to increase production efficiency and keep your equipment on the cutting edge.

Performance improvement

- High-speed/high-accuracy/multi-axis
- Vibration suppression
- Compact and energy efficient

Program standardization

- Conforms to IEC 61131-3
- Function blocks for motion control
- Synchronous control /cam control

Connectivity

For flexible system configurations

CC-Link IE TSN enables a high degree of compatibility with IoT technology. Our servo system provides new opportunities for value creation with highly integrated connectable devices and a dramatically expanded range of compatible devices.

Integration with connectable devices

- CC-Link IE TSN
- Connection with TCP/IP devices

Usability

For quick operation start

Our intuitive and user-friendly products are designed to make program development as simple as possible. From system design to maintenance, efficiency is improved at each step of the development process through software and sizing tool enhancement.

Tool enhancement

- Simple programming
- Drive System Sizing Software/ FA Integrated Selection Tool
- Collaboration with partners

Improved drive system usability

- Single connector/one-touch lock
- Single/dual cable types
- Servo adjustment



Maintainability

For prompt detection and diagnosis of failures

In addition to the maintenance cost reduction, the machine downtime can be significantly reduced by prompt error detection and diagnostics.
Years of technical know-how and state of the art drive technology can realize predictive and planned maintenance.

Predictive/preventive maintenance

- Machine diagnosis

Corrective maintenance

- Servo system recorder

Maintenance cost reduction

- Batteryless absolute position encoder

Heritage

For utilization of existing devices

Incorporate existing manufacturing devices into your new system and benefit from reduced costs and faster construction speed.

Interchangeability with previous generation models

- Simple Motion mode
- SSCNET III/H-compatible MR-J5-B

Created using a brand-new approach, this new-generation servo system contributes to reducing the TCO through improved productivity

Focused on improving total performance.
The MELSERVO-J5 series servo system boasts industry-leading level basic performance.
The high-speed, high-precision capabilities of MELSERVO-J5 help to increase the productivity of your machines.

CC-Link IE TSN

MELSEC iQ-F series　MELSEC iQ-R series



FX5-SSC-G　RD78GH　RD78G

Motion Module

Minimum operation cycle *1	Max. number of control axes *1
31.25 μs	256 axes

*1. The values are applicable when RD78GH is used.

CC-Link IE TSN

Personal Computer Embedded Type Servo System Controller



Motion Control Software SWM-G(-N1)

Minimum operation cycle *2	Max. number of control axes
125 μs	128 axes

*2. The minimum operation cycle depends on the number of control axes and the CPU of the personal computer.

CC-Link IE TSN

CC-Link IE TSN supports TCP/IP communications and applies it to industrial architectures through its support of TSN enabling real-time communications. With its flexible system architecture and extensive setup and troubleshooting features make CC-Link IE TSN ideal for building an IIoT infrastructure across the manufacturing enterprise.

* TSN: Time Sensitive Networking
* IIoT: Industrial Internet of Things

CC-Link IE TSN

Servo System Controllers

Motion modules and Motion Control Software are available in our product lines. Select a controller suitable for your machine.

Motion Modules

The following operation modes are selectable: Simple Motion mode that enables utilization of existing projects and PLCopen® motion control FB mode that enables structured programming. MELSEC iQ-R series Motion modules utilize a multi-core processor to achieve enhanced performance.

Motion Control Software

Installed on a personal computer, Motion Control Software can perform motion control.

MELSERVO-J5 series servo amplifiers

Speed frequency response	Minimum communication cycle *3
3.5 kHz	31.25 µs

*3. MR-J5-G/MR-J5D1-G4 support 31.25 µs.

Industry-leading level

CC-Link IE TSN

SSCNET III/H
SERVO SYSTEM CONTROLLER NETWORK



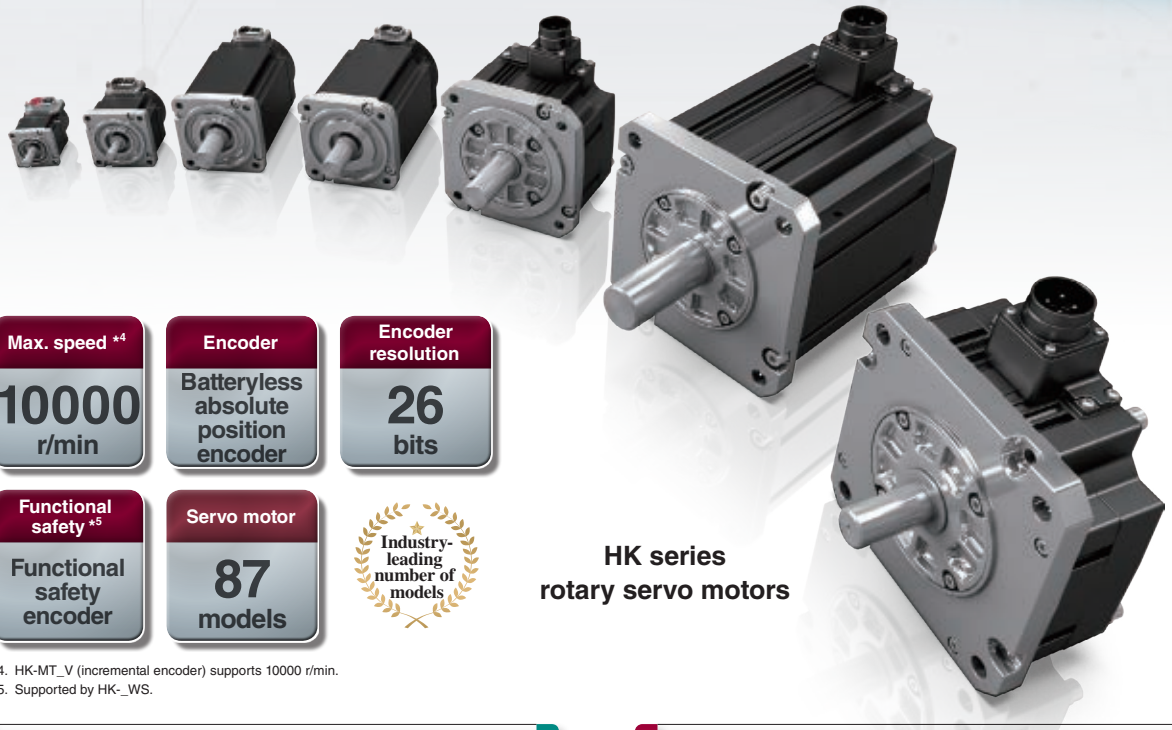

Max. speed *4	Encoder	Encoder resolution
10000 r/min	Batteryless absolute position encoder	26 bits

Functional safety *5	Servo motor
Functional safety encoder	87 models

Industry-leading number of models

HK series rotary servo motors

*4. HK-MT_V (incremental encoder) supports 10000 r/min.
*5. Supported by HK-_WS.

Servo Amplifiers

The MELSERVO-J5 series high-performance, industry-leading servo amplifiers feature a unique control engine that is more powerful than ever before.
MR-J5W_-G/MR-J5W_-B multi-axis servo amplifiers and MR-J5D_-G4 drive units simplify wiring and enable a compact machine.

CC-Link IE TSN-Compatible Servo Amplifiers

MR-J5-G/MR-J5D_-G4 servo amplifiers can connect to CC-Link IE TSN to perform high-speed, high-precision control.

SSCNET III/H-Compatible Servo Amplifiers

MR-J5-B servo amplifiers can connect to SSCNET III/H and utilize the existing program assets to improve the machine performance.

Rotary Servo Motors

The HK series rotary servo motors are equipped with a 26-bit resolution batteryless absolute position encoder as standard.

Batteryless Absolute Position Encoders

Mitsubishi Electric's unique multi-revolution detection method allows the saving of absolute position data without a battery.

Single Connector/One-Touch Lock/Single Cable Type

The servo motor power supply, encoder, and electromagnetic brake can be connected using only a single cable.
The one-touch lock makes wiring easy.

* "Industry-leading level" refers to results from a Mitsubishi Electric February 2025 research study.

Innovate Together

CONTROLLER

Programmable Controllers



MELSEC iQ-R



MELSEC iQ-F

CC-Link IE TSN-Compatible Motion Control Software



SWM-G(-N1)

CC-Link IE TSN-Compatible Motion Modules



RD78G



RD78GH



FX5-SSC-G

CC-Link IE TSN-Compatible Motion Control Board



NEW

MR-EM441G

INTERFACE

CC-Link IE TSN

CC-Link IE TSN

SERVO AMPLIFIER

CC-Link IE TSN-Compatible Servo Amplifiers



MR-J5-G

CC-Link IE TSN-Compatible 2/3-Axis Servo Amplifiers



MR-J5W_-G

CC-Link IE TSN-Compatible 1/2/3-Axis Drive Units



MR-J5D_-G4

* MR-J5-G/MR-J5D1-G4 are also compatible with CC-Link IE Field Network Basic.

* An MR-CV (400 V) is required for the drive units.

SERVO MOTOR

Rotary Servo Motors



Small capacity, low inertia
HK-KT Series
Capacity: 0.05 to 2 kW



Small capacity, ultra-low inertia
HK-MT Series
Capacity: 0.05 to 1 kW



Medium capacity, medium inertia
HK-ST Series
Capacity: 0.5 to 7 kW



Medium capacity, ultra-low inertia
HK-RT Series
Capacity: 1 to 7 kW



NEW
Medium/large capacity, low inertia
HK-JT Series
Capacity: 7 to 22 kW

SOLUTION

e-F@ctory

We take full advantage of Mitsubishi Electric's technological capability that achieved development of FA devices, along with our connectivity technology which makes it possible to connect FA with IT.
e-F@ctory optimizes manufacturing overall by connecting all devices and equipment, and then analyzing and utilizing the vast amount of data collected.

Create new value with MELSERVO-J5.
Unlock performance with a total drive solution

Programmable Controllers



MELSEC iQ-R



MELSEC-Q

EtherCAT®-Compatible Motion Control Software



SWM-G-N1

SOFTWARE

- MELSOFT GX Works3
- MELSOFT MT Works2
- MELSOFT MR Configurator2
- MELSOFT Motorizer

SSCNET III/H-Compatible Motion Controllers



RnMTCPU Q17nDSCPU

SSCNET III/H-Compatible Simple Motion Modules



RD77MS QD77MS

Positioning Modules



RD75P RD75D QD75PN QD75DN

SSCNET III/H | **Multi-Network** | **Pulse Train/ Analog Voltage**

SSCNET III/H SERVO SYSTEM CONTROLLER NETWORK

EtherCAT® EtherNet/IP ODVA

SSCNET III/H-Compatible Servo Amplifiers



MR-J5-B

SSCNET III/H-Compatible 2/3-Axis Servo Amplifiers



MR-J5W_-B

Multi-Network-Compatible Servo Amplifiers



MR-J5-G-N1/MR-J5W_-G-N1/MR-J5D_-G4-N1

* EtherNet/IP® is compatible with MR-J5-G-HSN1, MR-J5-G-RJN1, MR-J5W_-G-N1, and MR-J5D_-G4-N1.

General Purpose Interface-Compatible Servo Amplifiers



MR-J5-A

Linear Servo Motors



Core type
LM-H3 Series
Rating: 70 to 960 N



Core type
LM-AJ Series
Rating: 68.1 to 446.8 N



Core type (natural/liquid cooling)
LM-F Series
Rating: 300 to 1200 N (natural cooling)
Rating: 600 to 2400 N (liquid cooling)



Core type with magnetic attraction counter-force
LM-K2 Series
Rating: 120 to 2400 N



Coreless type
LM-U2 Series
Rating: 50 to 800 N



Coreless type
LM-AU Series
Rating: 28 to 350 N

Direct Drive Motors

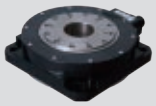

Low-profile flange type
TM-RG2M Series
Rating: 2.2 to 9 N·m

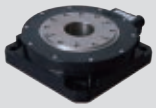

Low-profile table type
TM-RU2M Series
Rating: 2.2 to 9 N·m



High-rigidity
TM-RFM Series
Rating: 2 to 240 N·m

e-F@ctory Alliance

Through powerful alliances between Mitsubishi Electric, who boasts a broad-ranging product appeal in the FA domain, and partners that participate in the FA partnership program (e-F@ctory Alliance) promoted by Mitsubishi Electric, we will achieve new business creation and new monozukuri.

Product Lines

■Servo System Controllers (Note 3)

Servo system controller		Number of control axes	Minimum operation cycle [μs]	Features
MELSEC	Motion module RD78GH 	128, 256	31.25	MELSEC iQ-R series CC-Link IE TSN-compatible Motion module • Performs motion control (positioning, synchronous, cam, speed, and torque control) • Maximum number of connectable stations: 120 (Note 2)
	Motion module RD78G 	4, 8, 16, 32, 64	62.5	
	Motion module FX5-SSC-G 	4, 8	500	MELSEC iQ-F series CC-Link IE TSN-compatible Motion module • Performs motion control (positioning, synchronous, cam, speed, and torque control) • Maximum number of connectable stations FX5-40SSC-G: 20, FX5-80SSC-G: 24 (Note 2) • Number of connectable modules: 4 modules/FX5U or FX5UC
Personal computer embedded type	Motion Control Software (Note 4) SWM-G(-N1) 	16, 32, 64, 128	125	CC-Link IE TSN-compatible Motion Control Software for personal computers (Note 1) • Performs motion control (positioning, synchronous, cam, speed, and torque control) • Maximum number of connectable stations: 128 (Note 2) • Includes Real Time OS (RTX64), which enables SWM-G(-N1) to perform a real-time operation without being affected by the operation on Windows® • Programming language: Visual C++®
	Motion control board MR-EM441G 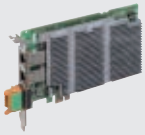	64	62.5	CC-Link IE TSN-compatible Motion control board for personal computers (Note 1) • Performs motion control (positioning and pressure control) • Maximum number of connectable stations: 120 (Note 2) • Programming language: Visual C++®

Notes: 1. A personal computer and Visual Studio® are not included and must be prepared by the user.
2. The multi-axis servo amplifiers MR-J5W_-G/MR-J5D_-G4 occupy one station.
3. For SSCNET III/H-compatible servo system controllers, refer to catalogs and manuals of MELSEC iQ-R series and MELSEC-Q series.
4. SWM-G-N1 is also compatible with EtherCAT®.

■Converters (Note 1)

Simple converter	Power supply specifications	Capacity [kW]
MR-CM 	200 V AC	3

Power regeneration converter	Power supply specifications	Capacity [kW]
MR-CV4 	400 V AC	11, 18, 30, 37, 45, 55, 75

Converter features
Supports multi-axis systems • Energy saving by effective use of regenerative energy • Reduction of molded-case circuit breakers and magnetic contactors • Reduced wiring • Space saving of total installation area

Notes: 1. Refer to "Servo Amplifier Specifications" for details of the selection of converters and servo amplifiers.

■Servo Amplifiers

●: Supported ○: Future support planned –: Not supported

	Servo amplifier	Number of control axes	Power supply specifications (Note 2)	Rated output [kW] (Note 1)	Command interface (Note 3)						Control mode			Fully closed loop control	Compatible servo motor		
					CC-Link IE TSN	EtherCAT®	EtherNet/IP® (Note 5)	SSCNET III/H	Pulse train	Analog voltage	Position	Velocity/Speed	Torque		Rotary	Linear	Direct drive
CC-Link IE TSN	MR-J5-G 	1 axis	200 V AC	0.1, 0.2, 0.4, 0.6, 0.75, 1, 2, 3.5, 5, 7, 12, 17, 25	●	–	–	–	–	–	●	●	●	●	●	●	●
			400 V AC	0.6, 1, 2, 3.5, 5, 7, 12, 17, 25	●	–	–	–	–	–	●	●	●	●	●	○	–
	MR-J5W_-G 	2 axes	200 V AC	0.2, 0.4, 0.75, 1	●	–	–	–	–	–	●	●	●	●	●	●	●
		3 axes		0.2, 0.4	●	–	–	–	–	–	●	●	●	–	●	●	●
	MR-J5D_-G4 (Note 4) 	1 axis	400 V AC	1, 2, 3.5, 5, 7	●	–	–	–	–	–	●	●	●	●	●	–	–
		2 axes		1, 2, 3.5, 5, 7	●	–	–	–	–	–	●	●	●	●	●	–	–
		3 axes		1, 2	●	–	–	–	–	–	●	●	●	–	●	–	–
SSCNET III/H	MR-J5-B 	1 axis	200 V AC	0.1, 0.2, 0.4, 0.6, 0.75, 1, 2, 3.5, 5, 7, 12, 17, 25	–	–	–	●	–	–	●	●	●	●	●	●	●
			400 V AC	0.6, 1, 2, 3.5, 5, 7, 12, 17, 25	–	–	–	●	–	–	●	●	●	●	●	○	–
	MR-J5W_-B 	2 axes	200 V AC	0.2, 0.4, 0.75, 1	–	–	–	●	–	–	●	●	●	●	●	●	●
		3 axes		0.2, 0.4	–	–	–	●	–	–	●	●	●	–	●	●	●
Multi-network	MR-J5-G-N1 	1 axis	200 V AC	0.1, 0.2, 0.4, 0.6, 0.75, 1, 2, 3.5, 5, 7, 12, 17, 25	–	●	●	–	–	–	●	●	●	●	●	●	●
			400 V AC	0.6, 1, 2, 3.5, 5, 7, 12, 17, 25	–	●	●	–	–	–	●	●	●	●	●	○	–
	MR-J5W_-G-N1 	2 axes	200 V AC	0.2, 0.4, 0.75, 1	–	●	●	–	–	–	●	●	●	●	●	●	●
		3 axes		0.2, 0.4	–	●	●	–	–	–	●	●	●	–	●	●	●
	MR-J5D_-G4-N1 (Note 4) 	1 axis	400 V AC	1, 2, 3.5, 5, 7	–	●	●	–	–	–	●	●	●	●	●	–	–
		2 axes		1, 2, 3.5, 5, 7	–	●	●	–	–	–	●	●	●	●	●	–	–
		3 axes		1, 2	–	●	●	–	–	–	●	●	●	–	●	–	–
General-purpose interface	MR-J5-A 	1 axis	200 V AC	0.1, 0.2, 0.4, 0.6, 0.75, 1, 2, 3.5, 5, 7, 12, 17, 25	–	–	–	–	●	●	●	●	●	●	●	●	●
			400 V AC	0.6, 1, 2, 3.5, 5, 7, 12, 17, 25	–	–	–	–	●	●	●	●	●	●	●	○	–

Notes: 1. The value listed is the servo amplifier rated output. Refer to "Combinations of Servo Motors and Servo Amplifiers" for compatible servo motors.
2. 200 V AC servo amplifiers are also compatible with DC power supply input as standard.
3. MR-J5-G/MR-J5D1-G4 are also compatible with CC-Link IE Field Network Basic.
4. An MR-CV_4 power regeneration converter unit is required for MR-J5D_-G4(-N1) drive units.
5. EtherNet/IP® is supported by MR-J5-G-HSN1/MR-J5-G-RJN1/MR-J5W_-G-N1/MR-J5D_-G4-N1.

Product Lines

■Rotary Servo Motors

●: Supported –: Not supported

Rotary servo motor series		Rated speed [r/min] (Note 2)	Rated output [kW] (Note 1)	With an electro-magnetic brake (B)	With a gear reducer (G1, G5, G7) (Note 4)	IP rating (Note 3)	Replaceable series	Features	Application examples
Small capacity	HK-KT series 	3000 (6700)	0.05, 0.1, 0.15, 0.2, 0.4, 0.6, 0.75, 1.0, 1.5, 2.0 0.4, 0.6, 0.75, 1.0, 1.5, 2.0	●	●	IP67	HG-KR HG-JR	Low inertia Batteryless absolute position encoder Includes flat type models Has a single connector	Belt drives Robots X-Y tables Semiconductor manufacturing systems
	HK-MT series 	3000 (6700/ 10000)	0.05, 0.1, 0.15, 0.2, 0.4, 0.6, 0.75, 1.0	●	–	IP67	HG-MR	Ultra-low inertia Batteryless absolute position encoder Includes high-speed type models (Note 5) Has a single connector	Inserters Mounters Ultra-high-throughput material handling systems
Medium capacity	HK-ST series 	2000/ 3000 (4000/ 6700)	0.5, 0.75, 1.0, 1.75, 2.0, 3.0, 3.5, 5.0, 7.0 0.5, 1.0, 1.75, 2.0, 3.0, 3.5, 5.0, 7.0	●	●	IP67	HG-SR HG-JR HG-UR	Medium inertia Batteryless absolute position encoder Includes flat type models Offers two rated speeds	Material handling systems Battery manufacturing systems Printing systems Food packaging machines
	HK-RT series 	3000 (6700)	1.0, 1.5, 2.0, 3.5, 5.0, 7.0 1.0, 1.5, 2.0, 3.5, 5.0, 7.0	●	–	IP67	HG-RR	Ultra-low inertia Batteryless absolute position encoder Has a single connector (1 to 2 kW)	X-Y tables Ultra-high-throughput material handling systems
Medium/large capacity	HK-JT series 	1500 (3000)	7, 11, 15, 22 7, 11, 15, 22	● (Note 7)	–	IP67/ IP44 (Note 8)	HG-JR	Low inertia Batteryless absolute position encoder One-touch lock (Note 6)	Injection molding machines Press machines

Notes: 1. : For 400 V.
2. The value in brackets indicates the maximum speed. The speed varies by the model type. Refer to "Rotary Servo Motors Specifications" for details.
3. The shaft-through portion is excluded. For geared servo motors, IP rating of the reducer part is equivalent to IP44.
4. G1 indicates a gear reducer for general industrial machines, and G5 and G7 indicate a gear reducer for high precision applications. HK-KT series servo motors are available in 200 V only. Refer to "Rotary Servo Motors Specifications" for details.
5. The high-speed type models (maximum speed of 10000 r/min) are equipped with an incremental encoder.
6. The one-touch lock is available for HK-JT 1500 r/min series, 15 kW or less.
7. The servo motor with an electromagnetic brake is not available for HK-JT 1500 r/min series 22 kW.
8. For HK-JT 1500 r/min series, 15 kW or smaller is rated IP67, and 22 kW is rated IP44.

■Linear Servo Motors

Linear servo motor series		Maximum speed [m/s]	Continuous thrust [N]	Maximum thrust [N]	Cooling method	Features	Application examples
Core type	LM-H3 series 	3.0	70, 120, 240, 360, 480, 720, 960	175, 300, 600, 900, 1200, 1800, 2400	Natural cooling	Suitable for space-saving Compact size and high thrust Maximum speed: 3 m/s	Mounters Wafer cleaning systems FPD assembly machines Material handlings
	LM-AJ series 	2.0 to 6.5	68.1, 117.0, 136.2, 174.5, 223.4, 234.0, 348.9, 446.8	214.7, 369.0, 429.4, 550.2, 704.5, 738.1, 1100.4, 1409.1	Natural cooling	Low installation height, and suitable for compact X-Y tables	Semiconductor manufacturing systems FPD assembly machines
	LM-F series 	2.0	300, 600, 900, 1200	1800, 3600, 5400, 7200	Natural cooling	Compact size The integrated liquid-cooling system doubles the continuous thrust.	Press feeders NC machine tools Material handlings
			600, 1200, 1800, 2400		Liquid cooling		
	LM-K2 series 	2.0	120, 240, 360, 720, 1200, 1440, 2400	300, 600, 900, 1800, 3000, 3600, 6000	Natural cooling	High thrust density Magnetic attraction counter-force structure enables longer life of the linear guides and lower audible noise.	Mounters Wafer cleaning systems FPD assembly machines
Coreless type	LM-U2 series 	2.0	50, 75, 100, 150, 225, 400, 600, 800	150, 225, 300, 450, 675, 1600, 2400, 3200	Natural cooling	No cogging and small speed fluctuation No magnetic attraction force structure extends life of the linear guides.	Screen printing systems Scanning exposure systems Inspection systems Material handlings
	LM-AU series 	2.0 to 4.5	28, 44, 57, 85, 88, 113, 132, 176, 264, 350	122, 274, 280, 411, 549, 561, 842, 970, 1684, 1764	Natural cooling	No cogging and small speed fluctuation No magnetic attraction force structure extends life of the linear guides.	Screen printing systems Scanning exposure systems Inspection systems Material handlings

■Direct Drive Motors

Direct drive motor series		Motor outer diameter [mm]	Hollow shaft diameter [mm]	Rated speed [r/min]	Maximum speed [r/min]	Rated torque [N·m]	Maximum torque [N·m]	IP rating (Note 1)	Features	Application examples
Low-profile	TM-RG2M series/ TM-RU2M series 	ø130	ø20	300	600	2.2	8.8	IP40	Suitable for low-speed and high-torque operations Smooth operation with less audible noise The motor's low-profile design contributes to compact construction and a low center of gravity for enhanced machine stability. Clean room compatible	Semiconductor manufacturing devices Liquid crystal manufacturing devices Machine tools
		ø180	ø47	300	600	4.5	13.5	IP40		
		ø230	ø62	300	600	9	27	IP40		
High-rigidity	TM-RFM series 	ø130	ø20	200	500	2, 4, 6	6, 12, 18	IP42		
		ø180	ø47	200	500	6, 12, 18	18, 36, 54	IP42		
		ø230	ø62	200	500	12, 48, 72	36, 144, 216	IP42		
		ø330	ø104	100	200	40, 120, 240	120, 360, 720	IP42		

Notes: 1. Connectors and the gap along the rotor (output shaft) are excluded.

Construct a high-performance servo system using our extensive product line

We understand that each system is different and has unique drive control requirements.
To meet these demands, we have expanded the product line for our next-generation servo system to offer simple converters, engineering software, servo system controllers, servo amplifiers, servo motors, and a variety of other components.
Mitsubishi Electric is dedicated to satisfying all of our customers' needs.

Simple programming



Collaborating with our extensive group of partners allows us to flexibly support your system needs

Servo systems are constructed using iQ Platform devices such as controllers, servo drivers, actuators, and sensors, and collaboration with our partner companies allows us to expand the number of possibilities available to customers. For example, partner products such as stepping motors, direct drive motors, vision systems, and various types of software are available to keep your equipment on the cutting edge.



Collaboration with partners

Single network

CC-Link IE TSN

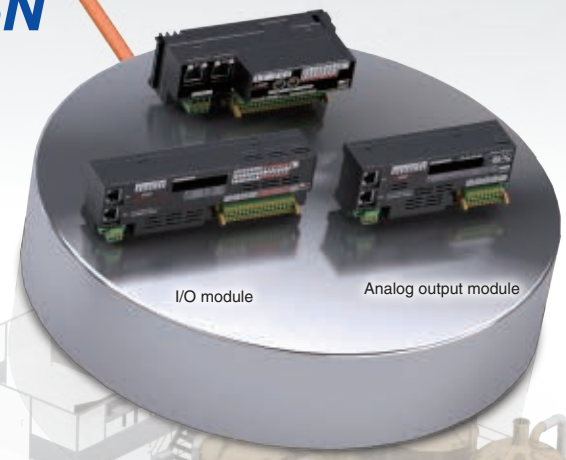

Safety I/O combined module

I/O module

Analog output module



Inverter

CC-Link IE TSN safety communication function Deterministic control even when mixed with TCP/IP communication and safety control communication

CC-Link IE TSN enables mixing of safety and non-safety communications.*1 Safety sub-functions (STO, SS1, SS2, SOS, SLS, SBC, SSM, SDI, SLI, SLT*2) are also supported for drive-control devices that are on the network.
Deterministic performance of cyclic communication is maintained even when mixed with slower information data (non real-time). This enables TCP/IP communication devices to be used without affecting overall control.

*1. Some devices cannot be connected to CC-Link IE TSN depending on the system configuration.
*2. Supported safety sub-functions vary depending on the system configuration.

Open integrated networking across the manufacturing enterprise

CC-Link IE TSN

CC-Link IE TSN supports TCP/IP communications and applies it to industrial architectures through its support of TSN enabling real-time communications. With its flexible system architecture and extensive setup and troubleshooting features make CC-Link IE TSN ideal for building an IIoT infrastructure across the manufacturing enterprise.

* TSN: Time Sensitive Networking
* IIoT: Industrial Internet of Things

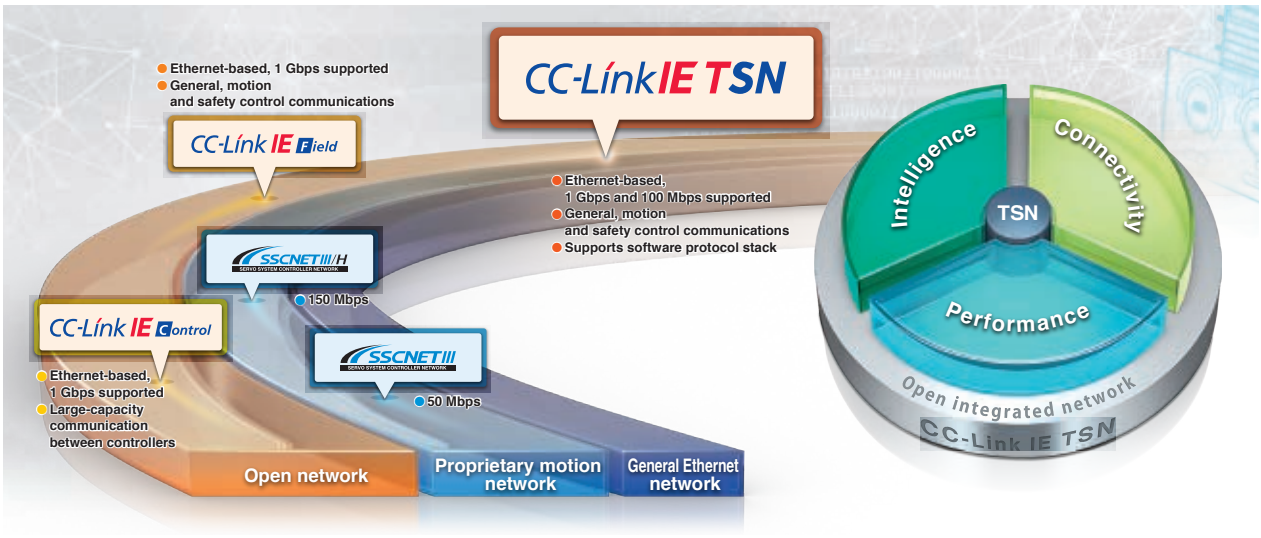

Real-Time Network Performance Even When Integrated with Information Data

TSN technology enables mixing of deterministic communications with IT system information data on the same network. Giving higher priority to CC-Link IE TSN cyclic communications and TCP/IP communications by allocating increased network bandwidth, devices using general Ethernet communications can be connected on the same network while maintaining real-time control communication performance.

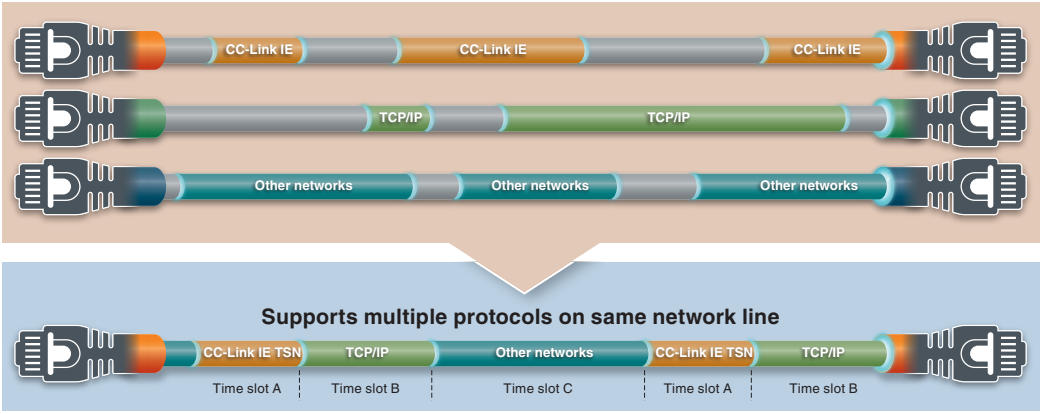

Deterministic Control Even When Mixed with TCP/IP Communication

Deterministic performance of cyclic communication is maintained even when mixed with slower information data (non real-time).
This enables TCP/IP communication devices to be used without affecting overall control.

* Some devices cannot be connected to CC-Link IE TSN depending on the system configuration.

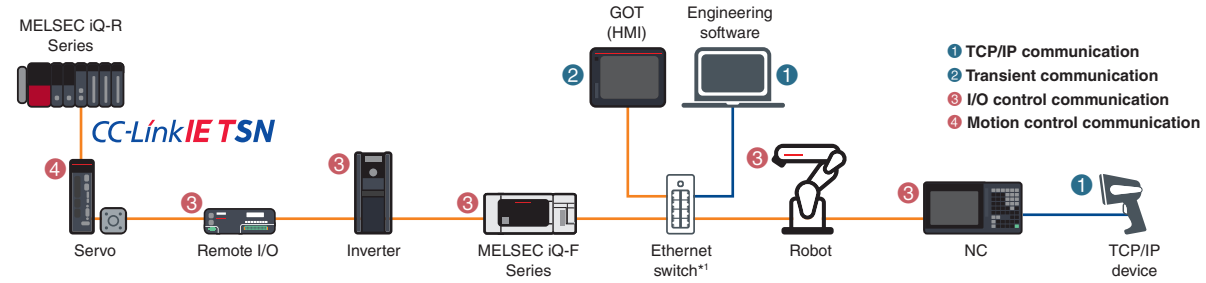

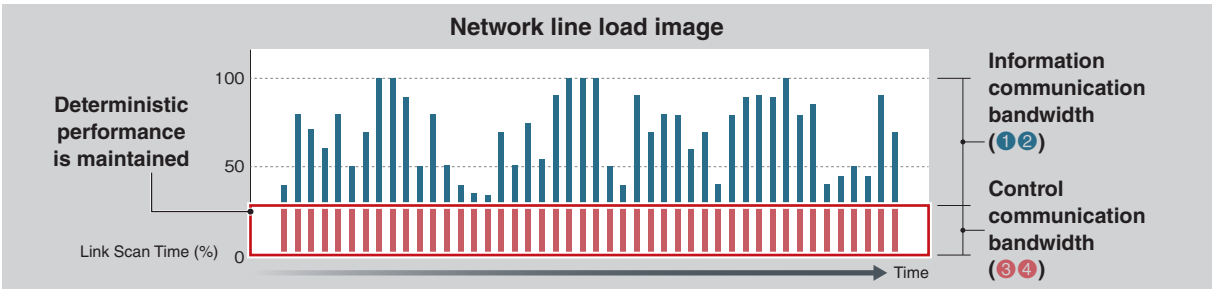

*1. Class B switching hub supporting CC-Link IE TSN recommended by the CC-Link Partner Association.

Integrated Network

Current network systems use multiple networks to enable communication between IT and control systems on the shop floor.
CC-Link IE TSN is a one-stop solution for integrating different networks, thereby realizing flexibility in topology and reducing wiring cost.

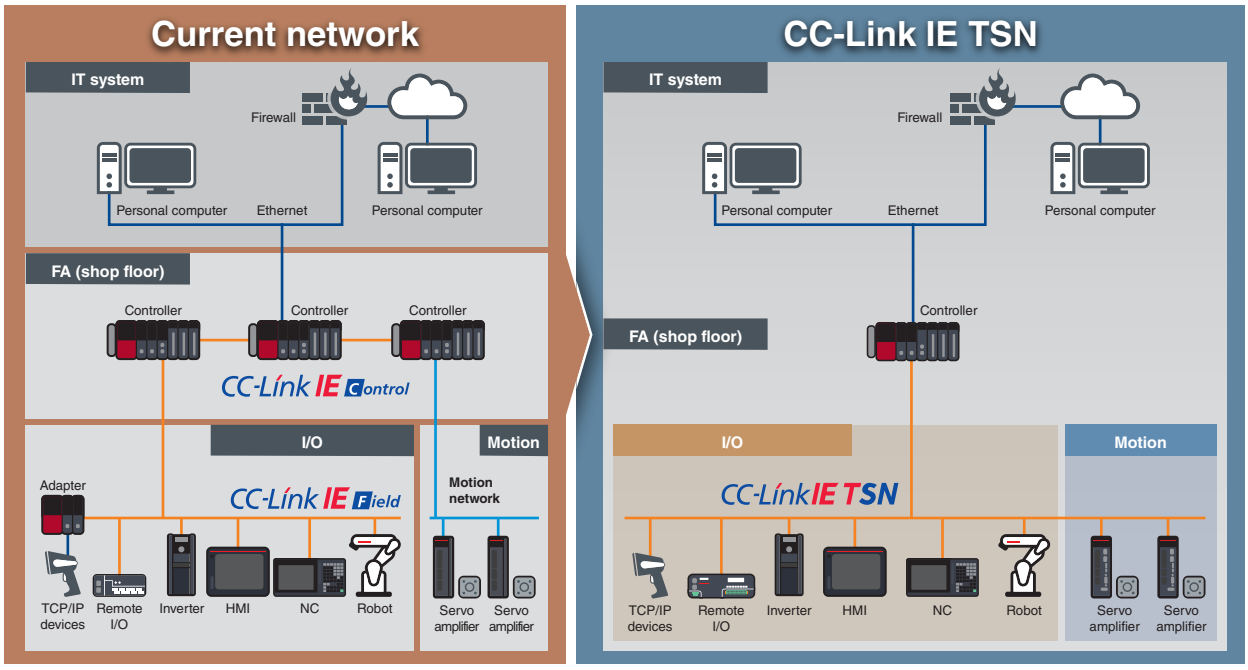

Network configuration example (includes functions and products planned for future support/release.)

High-Speed, High-Accuracy Motion Control

CC-Link IE TSN controls I/O modules while also maintaining high-speed motion control. The single network boosts machine performance.

- Motion control (high-speed processing)
- I/O control (low-speed processing)

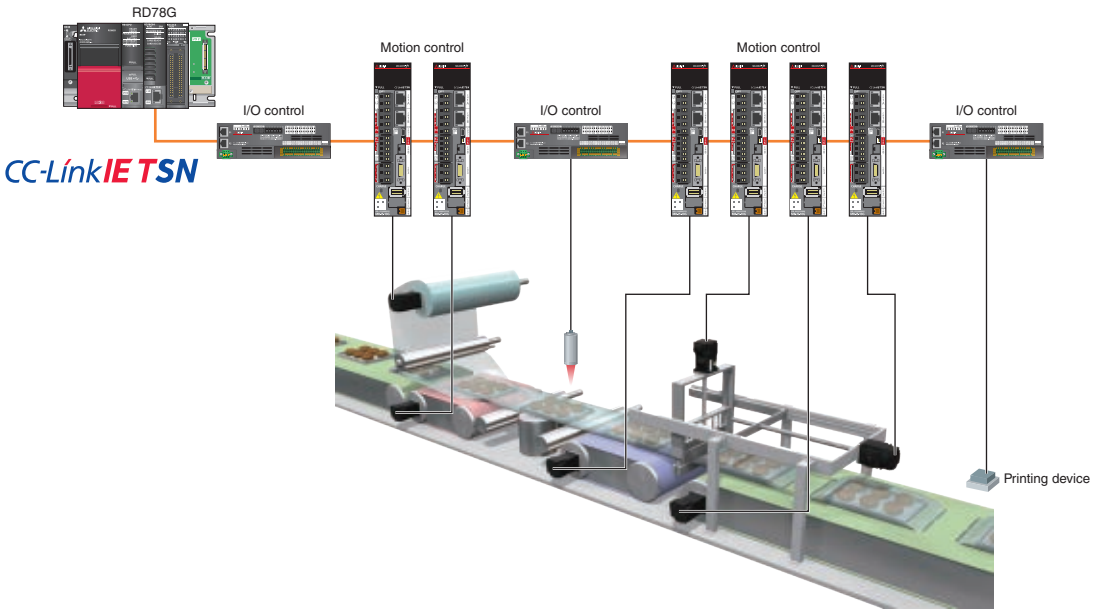

Time Synchronization

Set time is completely synchronized among servo amplifiers, Motion modules, and PLC CPUs. This time synchronization enables accurate recording of the event history in chronological order, making it simple to identify the cause of errors.

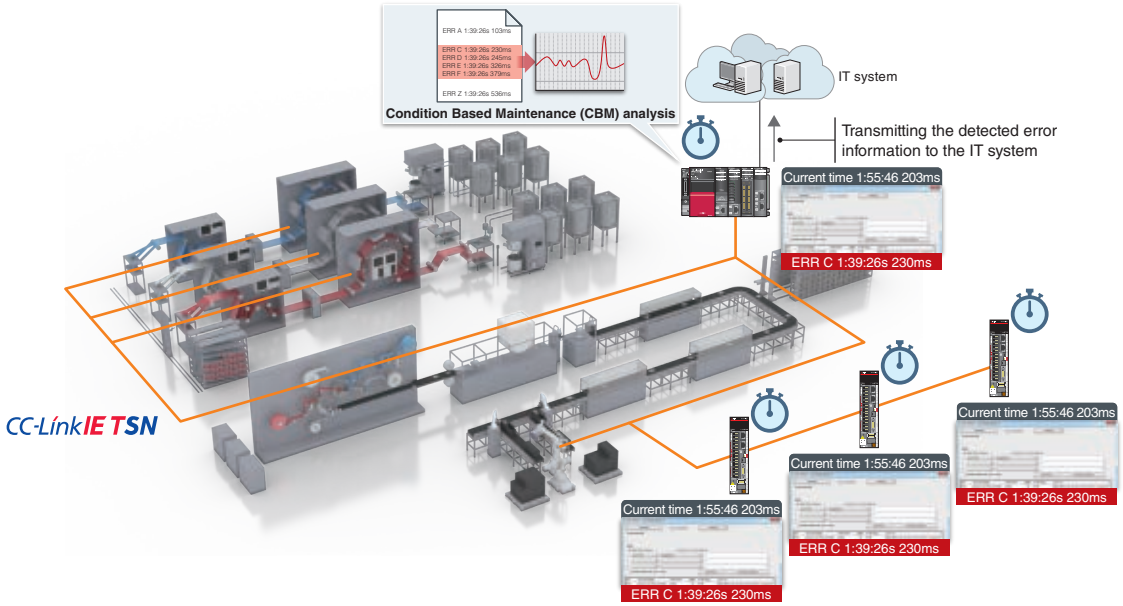

Seamless Connectivity Between TCP/IP Devices and a Servo System

TCP/IP communication (information communication) can be mixed in the same line with the real-time control communications of CC-Link IE TSN.
CC-Link IE TSN device stations and TCP/IP devices can be connected on the same network, achieving a flexible and integrated network system.
Note that the TCP/IP devices must be connected after servo amplifiers and I/O modules.

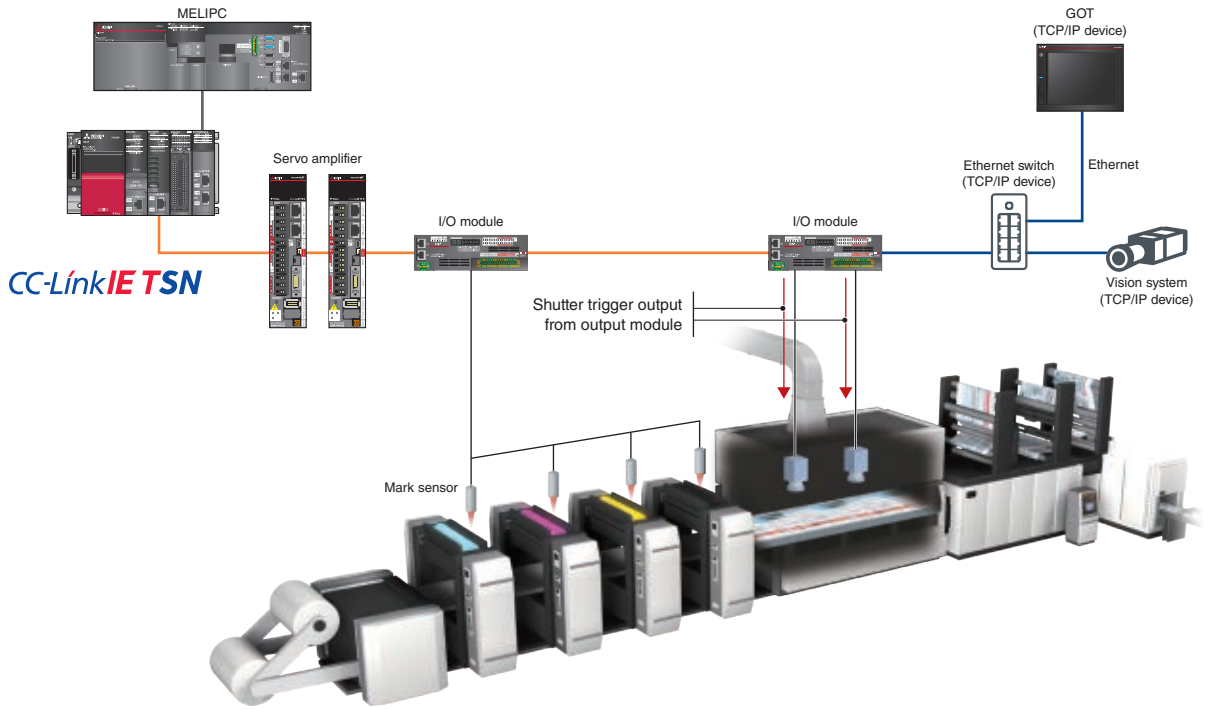

Large-Capacity Data Communications

CC-Link IE TSN is a high-speed, large-capacity 1 Gbps communications network that is capable of sending and receiving large amounts of data, such as manufacturing, quality, and control data from the production process. The network can transmit large recipe data or traceability data at high speeds without degrading the performance of servo system communications. In addition, Ethernet supported devices can directly and seamlessly connect to controllers on the same network line.

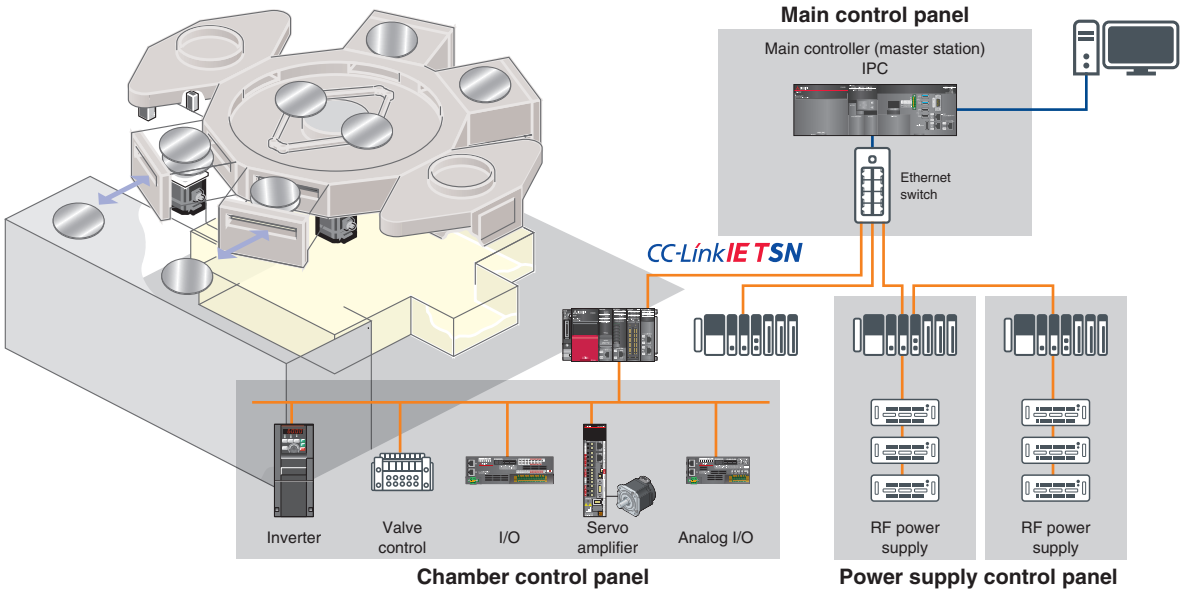

Network configuration example (includes functions and products planned for future support/release.)

Simple maintenance

Comprehensive diagnostic functions contribute to improved maintenance

Increasing the capacity of your production line is an important factor in this fiercely cost-competitive market.
The MELSERVO-J5 series servo system provides various kinds of maintenance functions that predict and prevent unforeseen problems and enable quick recovery when trouble arises.
These functions contribute to reduced downtime and increased productivity while protecting the quality of your products.

MELSERVO-J5 series servo amplifiers and servo motors are equipped with various predictive and preventative maintenance functions.

Predictive Maintenance (CBM)

Predictive maintenance, also known as Condition Based Maintenance (CBM), is the practice of detecting changes in machine vibration and friction so that parts can be replaced accordingly before they fail.
Performing predictive maintenance leads to increased machine capacity and helps to avoid system failure, reduce maintenance time, and improve both productivity and product quality.

Detects Changes in Vibration and Friction to Predict the Service Life of Mechanical Drive Components

[Machine diagnosis function]
The machine diagnosis function detects age-related deterioration based on the frictions and vibrations of mechanical drive components such as ball screws, belts, and gears. This function automatically generates a failure warning limit, detects errors, and outputs a warning upon signs of failure. Results of the failure are transmitted via CC-Link IE TSN to the Motion module and IT system and can be used for maintenance and overall machine diagnostics.

Maisart

Ball screw

To detect the service life of the ball screw:

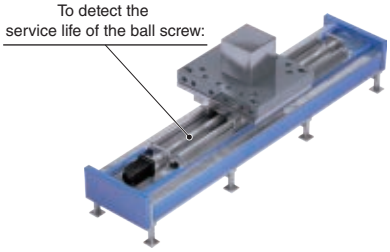

- Friction failure prediction with the friction estimation function
- Vibration failure prediction with the vibration estimation function

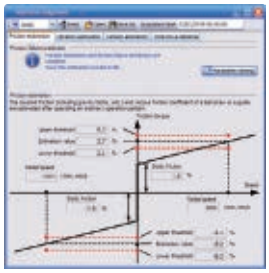

Estimated friction value is displayed.

Belt

To detect the service life of the belt:

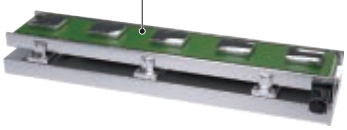

- Static friction failure prediction
- Belt tension deterioration prediction

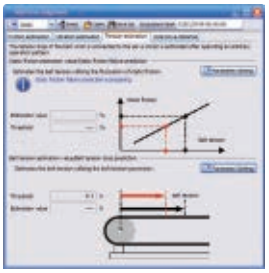

Estimated static friction and belt tension are displayed.

Gear

To detect the wear level of the gear:



- Backlash estimation function
- Gear failure prediction



Estimated backlash value is displayed.

Preventative Maintenance (TBM) *1

*1. TBM stands for Time Based Maintenance.

Machine Diagnosis (Mechanical Drive Components)

This function estimates when a machine failure will occur based on the total travel distance of the servo motor and notifies when it is time for replacement if the rated service life of the mechanical drive components is set.

● Machine total travel distance failure prediction

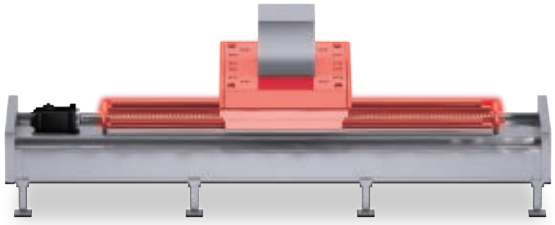

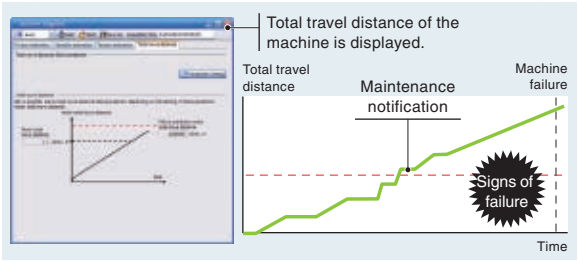

Servo Amplifier Life Diagnosis

This function displays the cumulative energization time and the number of inrush relay on/off times. The data can be used to check service life of the parts as a rough guide.

● Cumulative energization time (Smoothing condenser/ cooling fan life span)
● The number of inrush relay on/off times (Inrush relay life)

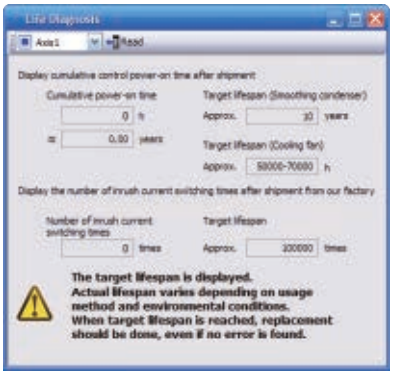

Corrective Maintenance

Servo System Data Recording

The servo system recorder of RD78G/RD78GH Motion module automatically collects data of all the servo amplifiers when an error occurs. The drive recorder of the servo amplifier continuously monitors the servo status and records the status transition such as a trigger condition before and after an alarm for a fixed period of time.

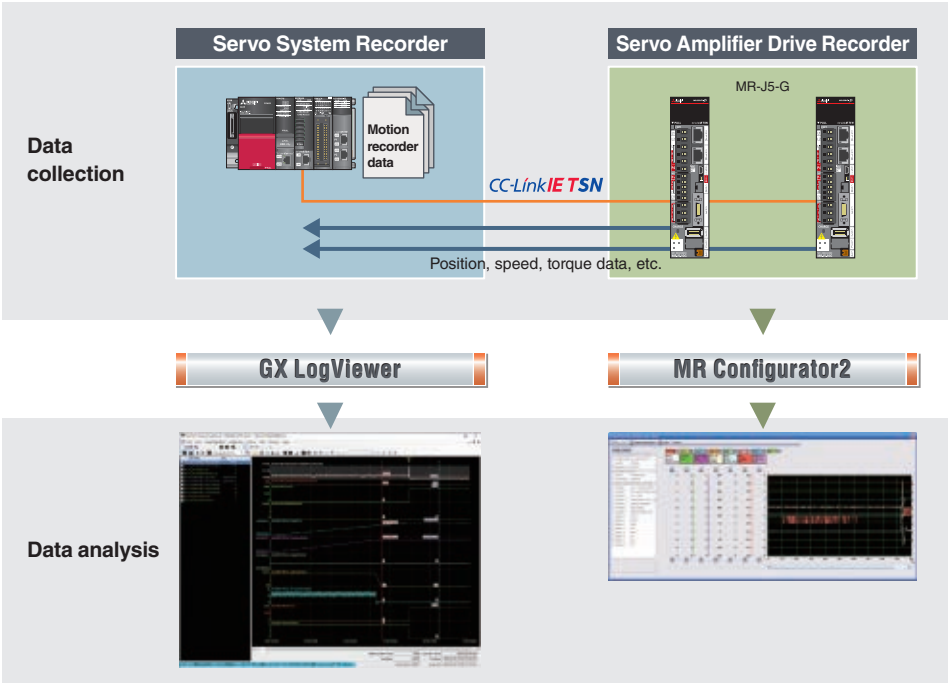

An engineering environment that provides common, consistent usability throughout all product development phases

Programmable Controller Engineering Software

MELSOFT GX Works3

Program creation is largely dependent on the ability of the programmer; therefore, an enormous amount of time is often spent on creating a servo program where a high level of programming expertise is required.
"MELSOFT GX Works3" introduces a more intuitive, efficient, and user-friendly programming environment that revolutionizes the programming process and minimizes hassles.

Engineering Environment for Maximizing Your Machine Performance

● Mitsubishi Electric offers a complete, consistent engineering environment which covers all aspects of the product development cycle - from network configuration all the way to programming with function blocks, startup, and maintenance.

System Design → **Programming**

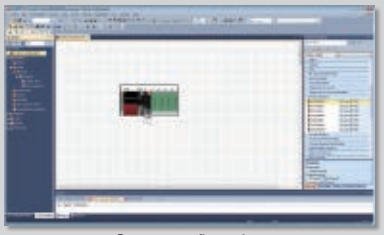
System configuration


Network configuration


Programming


e-Manual



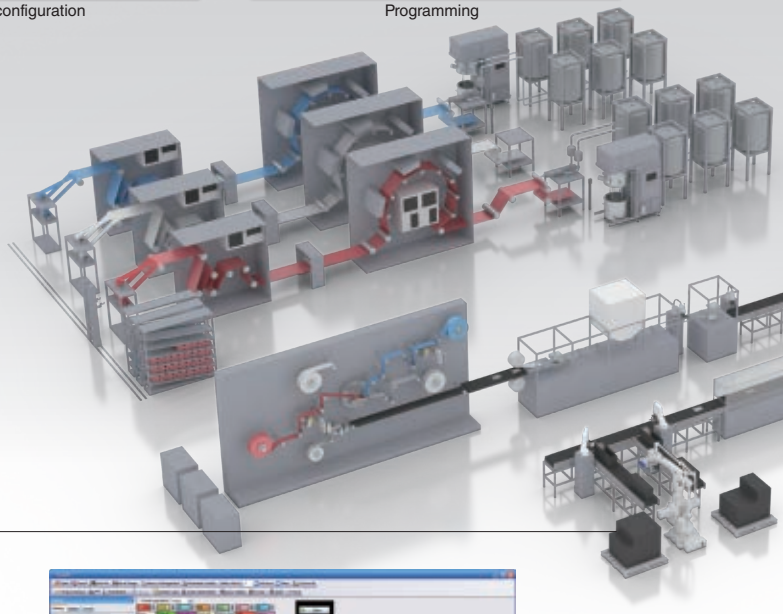

Useful Servo Software

[MELSOFT MR Configurator2]
The software has a variety of features which help users start up and conduct maintenance for servo amplifiers. Parameter settings, monitor display, diagnosis, test operation, and servo adjustments are easily performed.

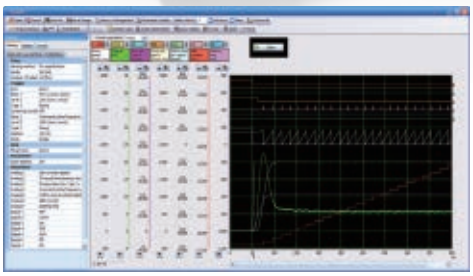



● All-in-one engineering platform MELSOFT GX Works3 allows you to set different modules in a single project, including the setting of a wide range of areas from servo amplifier parameters to PLC CPU data.

Debug

Maintenance

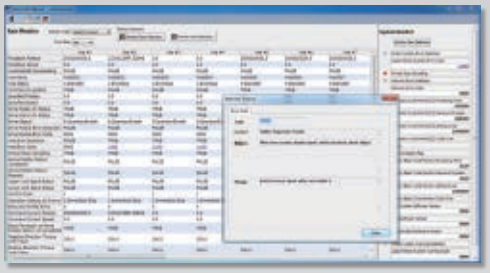

Monitor

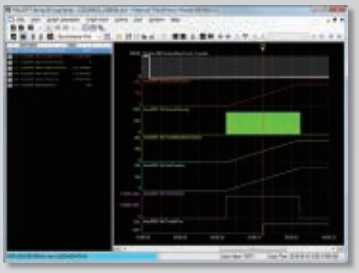

Real-time monitor



Servo adjustment*1



Event history

*1. The servo adjustment is enabled via MR Configurator2.

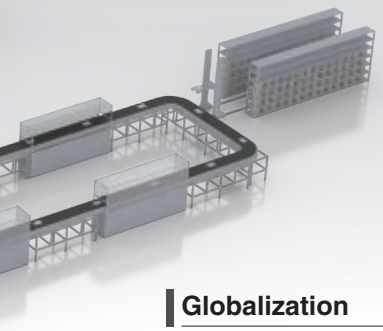

Globalization

[PLCopen® Motion Control FB]
PLCopen® Motion Control FB is a standardized interface, and therefore people other than the program designer can understand the programming, leading to reduced design and maintenance time.



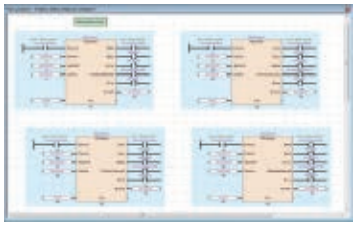

[Conforms to IEC 61131-3]
MELSOFT GX Works3 realizes structured programming such as ladder and ST, making project standardization across multiple users even easier.

[Multi-language support for global operations]
To adhere to today's global production needs, MELSOFT GX Works3 supports multi-language features at various levels, from the multiple language software menu system to device comment language switching features.
Supported languages: English, Japanese, and Chinese.

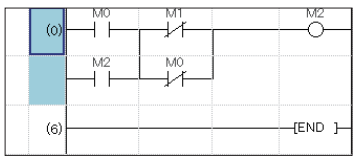

Heritage

Simple Motion Mode Simple Motion

The Simple Motion mode is an operation mode that enables the Motion module to utilize an existing project for driving servo amplifiers via CC-Link IE TSN. Reusing existing projects helps reduce program development time.

CC-Link IE TSN
Motion Module
MELSEC iQ-R series
RD78G

MELSEC iQ-F series
FX5-SSC-G



- Motion profile table
- Advanced synchronous control
- Digital oscilloscope

Select

Features of Simple Motion Mode

- Positioning control can be easily performed with motion profile tables. Synchronous control can be executed only with parameter settings.
- Remote devices are connected via CC-Link IE TSN and programmed from PLC CPUs.
- Data that is synchronized with the motion operation cycle can be collected with the digital oscilloscope. The collected data is displayed in waveforms for operation verification.

An example of programming by a PLC CPU

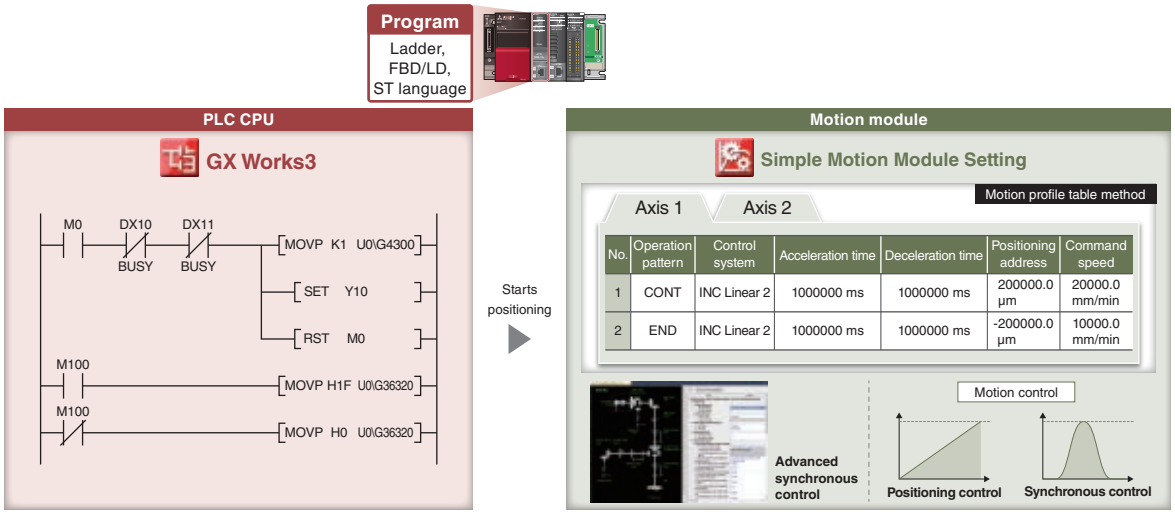

Product Lines



CC-Link IE TSN
MELSEC iQ-R series

RD78G4: 4 axes
RD78G8: 8 axes
RD78G16: 16 axes



CC-Link IE TSN
MELSEC iQ-F series

FX5-40SSC-G: 4 axes
FX5-80SSC-G: 8 axes

PLCopen® Motion Control FB Mode PLCopen®

The PLCopen® motion control FB mode is an operation mode that supports programming with PLCopen® Motion Control FBs, enabling structured/component programming for standardization.
When selecting this mode, the Motion module executes motion control with various advanced technologies such as programming using PLCopen® Motion Control FBs in ST language and logging of motion control data.

Select

CC-Link IE TSN
Motion Module
MELSEC iQ-R series
RD78GH
RD78G



- ST language
- PLCopen® Motion Control FB
- Logging
- Advanced synchronous control FB

Features of PLCopen® Motion Control FB Mode

- The Motion modules are programmed in ST language. PLC CPUs are in ladder, FBD/LD, and ST language.
- The library of PLCopen® Motion Control FBs, which are compliant with international standards, is available for programming.
- Users can analyze the operation status with logging data on GX LogViewer, which improves debug efficiency.

An example of programming by PLC CPU

[Programming by PLC CPU only]

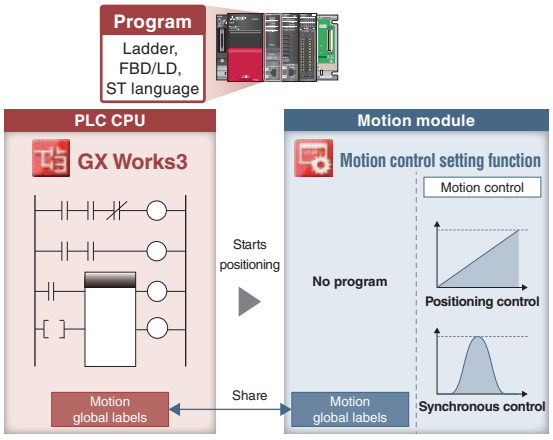

A PLC CPU program starts operation of the Motion module, eliminating the need for users to create another program for the Motion module, reducing programming burden.

An example of programming by each module

[Programming by PLC CPU and Motion modules]

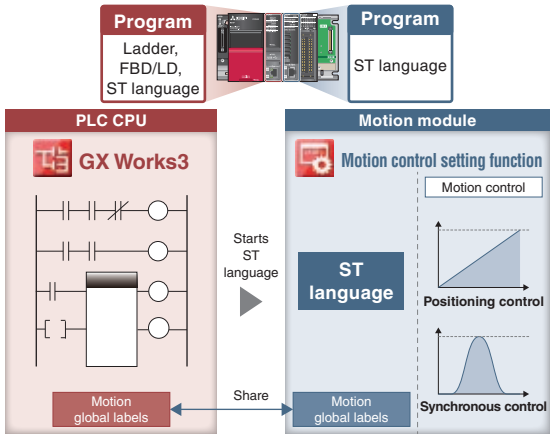

Motion modules can execute operations in place of the PLC CPU. This reduces the operation burden on the PLC CPU and results in a shorter cycle time.

Product Lines



CC-Link IE TSN
MELSEC iQ-R series

RD78GHV: 128 axes
RD78GHW: 256 axes



CC-Link IE TSN
MELSEC iQ-R series

RD78G4: 4 axes
RD78G8: 8 axes
RD78G16: 16 axes
RD78G32: 32 axes
RD78G64: 64 axes

Taking evolution to the next step with Simple Motion mode

Simple Motion Mode Simple Motion

CC-Link IE TSN
Motion Module

MELSEC iQ-R series
RD78G

MELSEC iQ-F series
FX5-SSC-G



Combined with a CC-Link IE TSN-compatible servo amplifier, the Motion modules create a high-performance servo system that improves machine capability.

- Connects remote I/O modules and FR-A800-GN inverters via CC-Link IE TSN.
- Connects TCP/IP devices, enabling a flexible system configuration.
- Possible to reuse the existing projects of Simple Motion modules.

Product Lines Simple Motion



MELSEC iQ-R series
RD78G4
RD78G8
RD78G16

- Maximum number of control axes: RD78G16: 16 axes/module
- Minimum operation cycle*1: 250 [μs]



MELSEC iQ-F series
FX5-40SSC-G
FX5-80SSC-G

- Maximum number of control axes: FX5-80SSC-G: 8 axes/module
- Minimum operation cycle*1: 500 [μs]
- Maximum number of connected modules*2: 4 modules/system

*1. The operation cycle varies by the number of control axes and the models.
*2. This refers to the total number of the Motion modules and one FX5-CCLGN-MS (master station).

Reuse of Existing Projects

The existing projects of a Simple Motion module can be reused. This enables reduction in program development time.

RD77MS➡RD78G

Select [Change Module] in the navigation menu of GX Works3 to convert the Simple Motion module project to a Motion module project. After the conversion, set the network parameters, servo amplifier parameters, and other parameters.

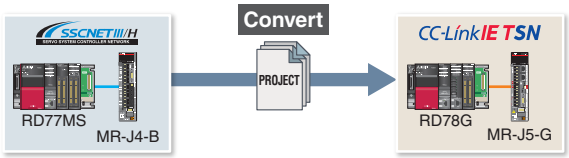

QD77MS➡RD78G

Select [Import Simple Motion Module Data] in the navigation menu of GX Works3 to import the parameters of QD77MS. After the import, set the network parameters, servo amplifier parameters, and other parameters.

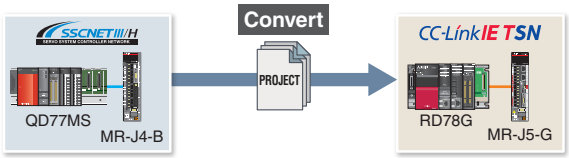

Improved Performance

Simple Motion

The minimum operation cycle of RD78G in Simple Motion mode is approximately 1.7 to 3.5 times faster than that of the previous models. The data from the servo amplifiers and input/output signals can be received at high speeds, which reduces the cycle time.

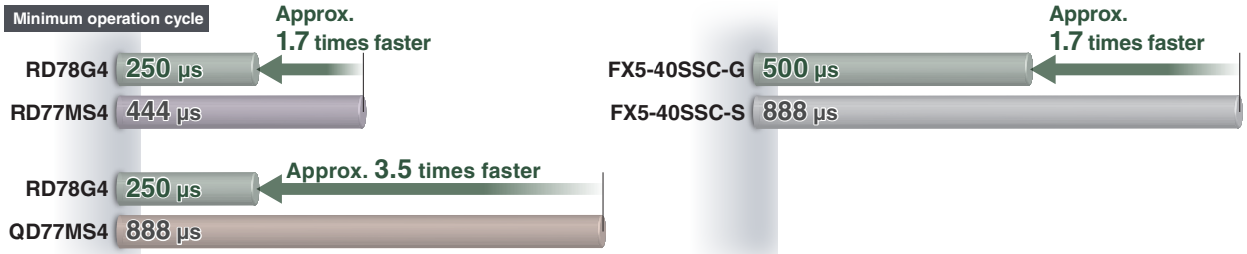

System Configuration

Simple Motion

The Motion module can function as a master station of CC-Link IE TSN.*1
This feature enables users to create a system more flexibly by connecting various devices, such as servo amplifiers, remote I/O modules, and TCP/IP devices, to the Motion module.*4

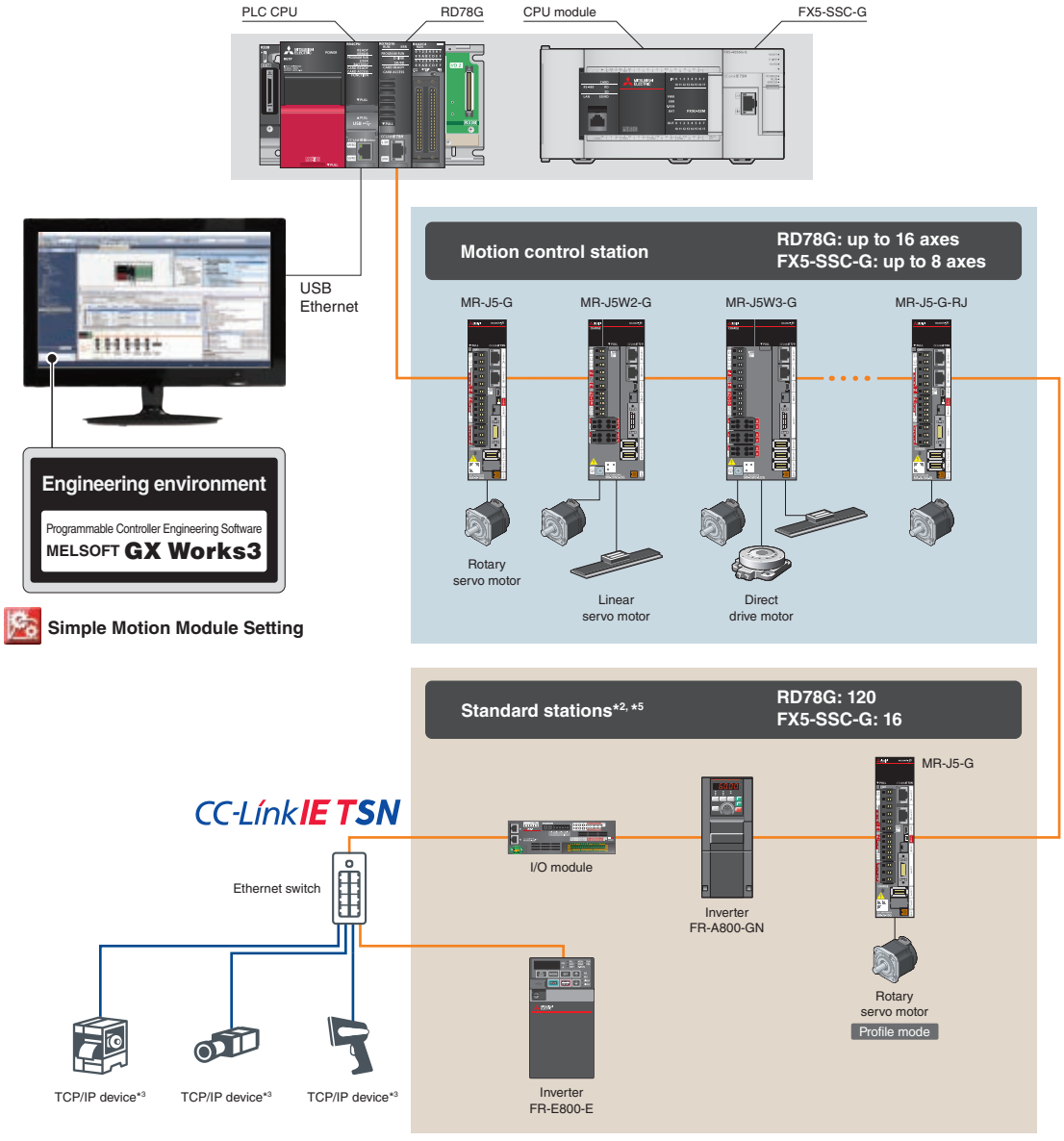

*1. Sub-master station is not supported.
*2. Standard stations refer to device stations other than motion control stations on CC-Link IE TSN.
*3. TCP/IP devices are not included in the standard stations.
*4. Refer to manuals for precautions when CC-Link IE TSN Class B and A devices are mixed.
*5. RD78G can connect up to 120 stations, which is the total number of the motion control stations and standard stations. FX5-SSC-G can connect 16 standard stations and the motion control stations.

Positioning Control

Simple Motion

Positioning control is easily executed using a motion profile table.

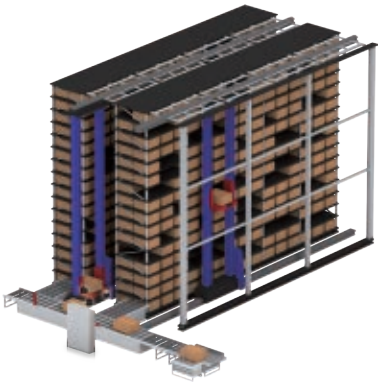

- To meet various application needs, the Motion module offers various types of positioning control, such as linear interpolation, 2-axis circular interpolation, fixed-pitch feed, and continuous path control.
- Positioning control can be executed easily by setting the positioning address, the speed, and other setting items in a sequence program.
- Powerful sub-functions, such as M-code output, skip, speed change, and target position change functions, are available.

Programming

The Motion module easily executes positioning operation with the instruction in a sequence program that starts a positioning data of the motion profile table.

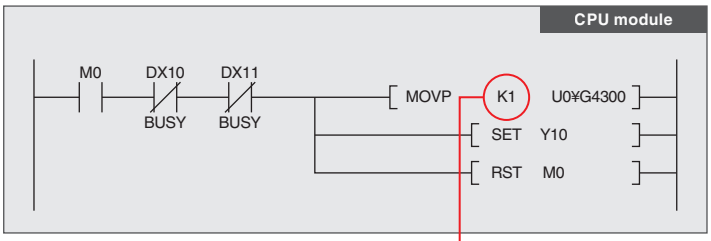



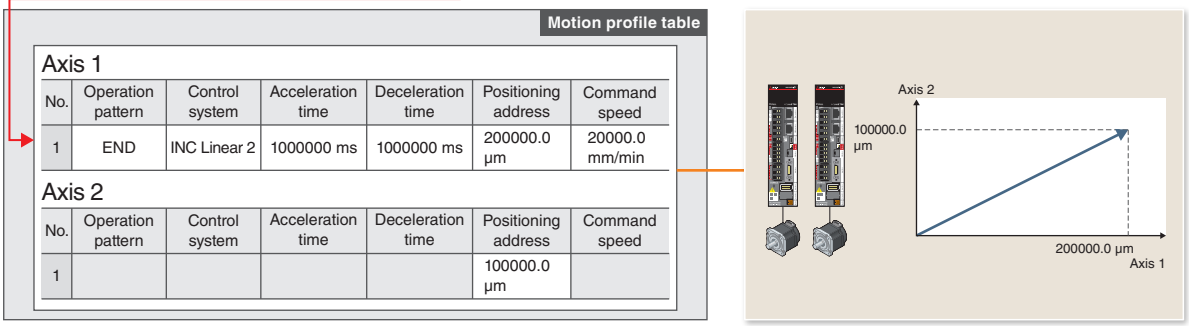

Target Position Change Function

The target position can be changed at any time even when the products are being moved (1-axis linear control). The product is examined with the vision system while being moved to the next line. If a faulty product is found, the target position is changed so that the faulty product is put in a separate tray for those rejected.

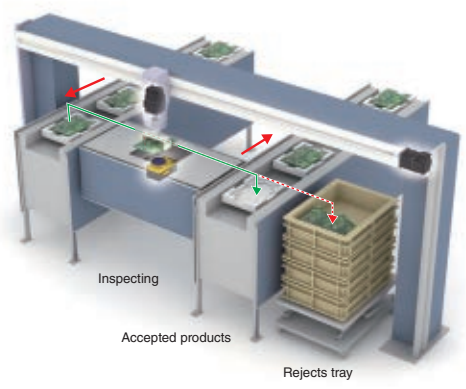

[Time chart]

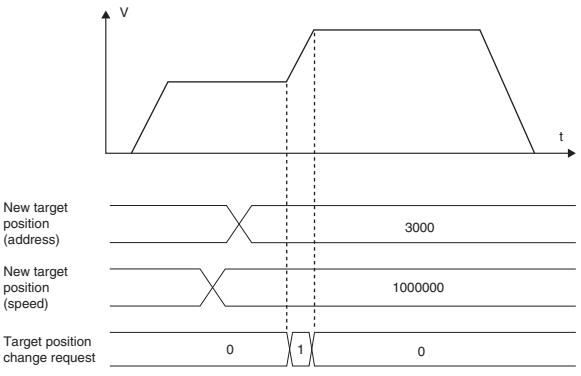

Advanced Synchronous Control

Simple Motion

Synchronous control can be achieved using software instead of controlling mechanically with gears, shafts, clutches, speed change gears, cams, etc.

- Synchronous control can be flexibly started/ended for each axis, enabling the synchronous control axis and positioning control axis to be used within the same program.
- Command generation axis, servo input axis, or synchronous encoder axis can be set as the input axis.
- The output axis is operated with a cam. The following three operations can be performed with the cam functions: linear operation, two-way operation, and feed operation.
- An encoder*1 can be connected via a servo amplifier and used as a synchronous encoder axis.

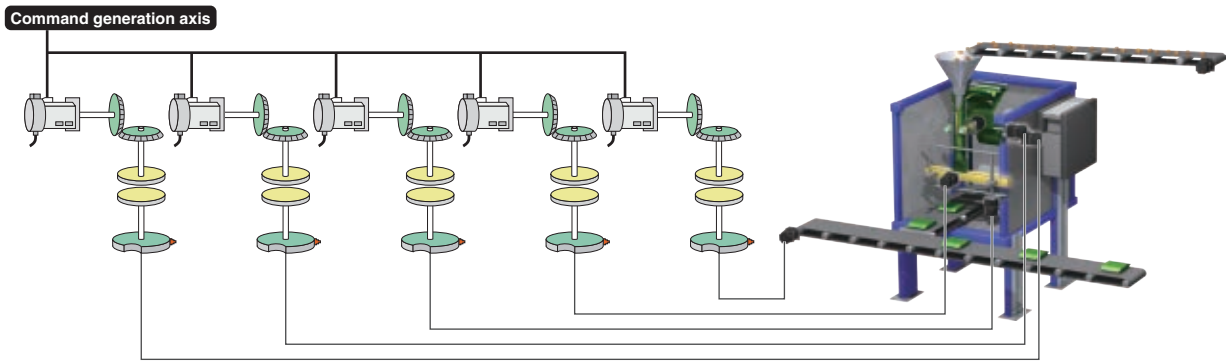

*1. For the compatible synchronous encoders, refer to each controller and servo amplifier manual.

[Command generation axis]

Command generation axis is the axis that performs only the command generation.
It is controlled independently of other axes connected to servo amplifiers. (not counted as a control axis)

Parameter Settings

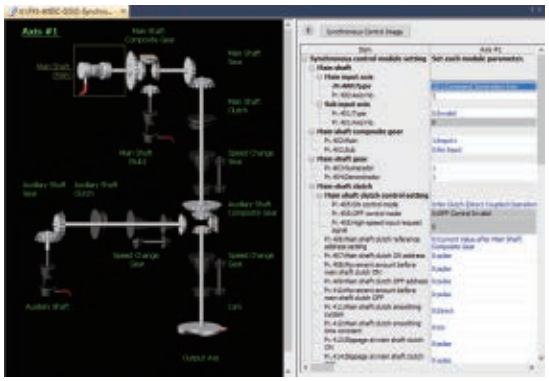

Synchronous control is executed by setting parameters of the input axis, output axis, gear, and clutch for synchronous control and turning on the synchronous control start signal.

Cam Data (Operation Profile Data)

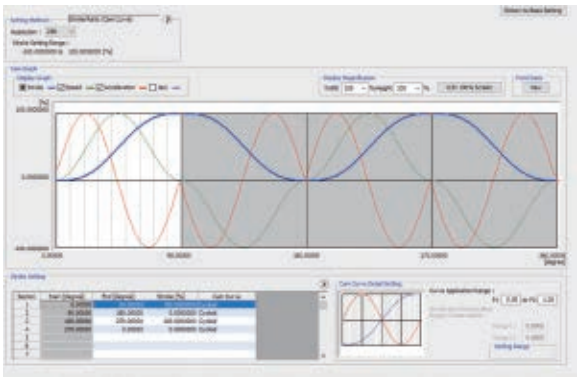

The cam graph can be flexibly and easily created through drag & drop. The waveform is changed according to the pointer's movement.

Start/Stop

Synchronous control can be executed after synchronous parameters are set for each output axis. When synchronous control start signal is turned on, the synchronous control parameters are analyzed, and the status is changed to during synchronous control. The output axis is operated by the commands transmitted from the input axis.

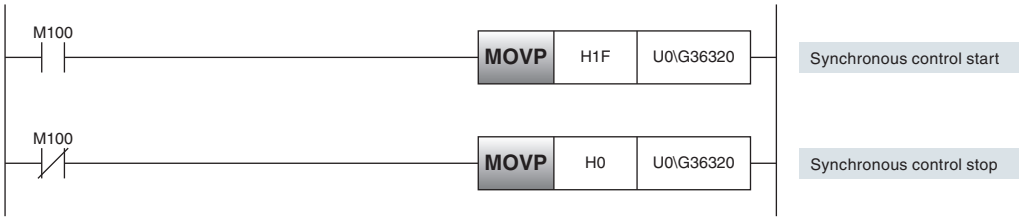

Selectable Speed Control to Best Fit Your System Needs

Simple Motion

Two types of speed control are available: speed control that includes position loop and speed control that does not include position loop.

Speed Control That Does Not Include Position Loop

- Control mode setting of the servo amplifier: velocity control mode
- Minimizes speed deviation by flexibly responding to speed changes, such as those that occur when the load changes.
- Suitable for machines which keep driving the motors at constant speed, such as a wind/unwind machine.

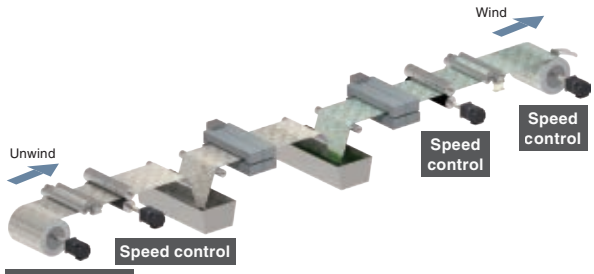

Converting machine

Speed Control That Includes Position Loop

- Control mode setting of the servo amplifier: position control mode
- Suitable for operations that repeatedly switch between speed and position control.

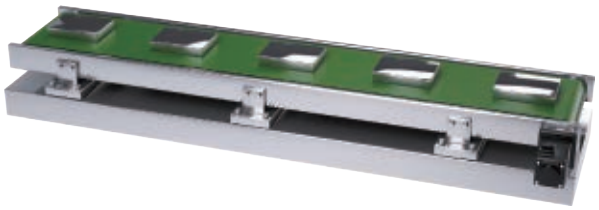

Belt conveyor

Torque Control

Simple Motion

Torque Control

The axes in torque control are controlled to run at the constant torque by following the torque command.
When the load is light and the speed increases to the set limit, the torque control switches to speed control.

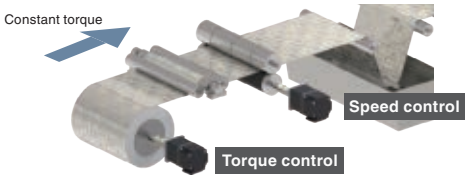

Continuous Operation to Torque Control

The axes are controlled to run at the constant torque by following the torque command while the current position is being tracked.
The position control can be switched smoothly to the torque control without stopping the servo motor.

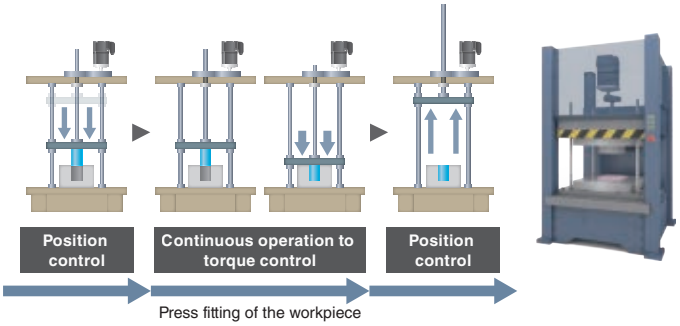

Press fitting of the workpiece

Auxiliary Functions

Simple Motion

Inter-Module Synchronization*1

The inter-module synchronization function can synchronize the control timing between multiple Motion modules on the same base unit.
Even different machines can be synchronized through this function when each machine uses Motion modules.

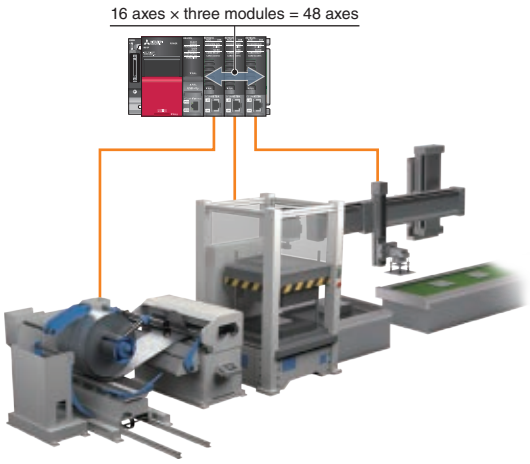

*1. The function is available with RD78G.

Automatic Return

When device stations are back to normal status after disconnected due to a data link error, this function automatically returns the disconnected stations to the network and restarts data link.
Only the machine where an error occurred can be turned off, and parts can be replaced without turning off the power of the entire system.

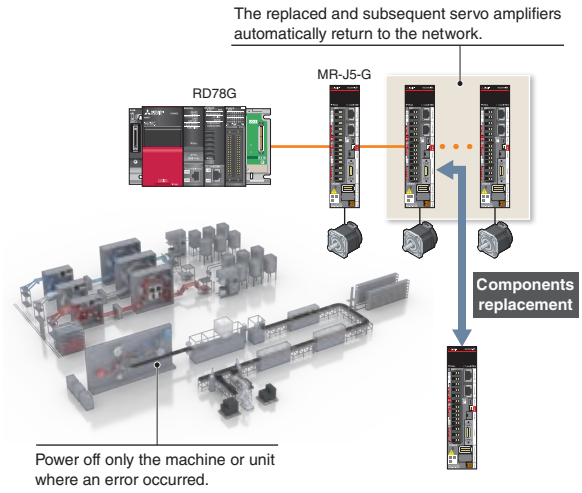

Read/Write Operation of Standard Stations

- The PLC CPU sends/receives link devices to/from standard stations (device stations other than the motion control stations) through a Motion module.
- One-to-one communication is possible between the master and device stations.
- The PLC CPU can be programmed using the signals of the device stations.

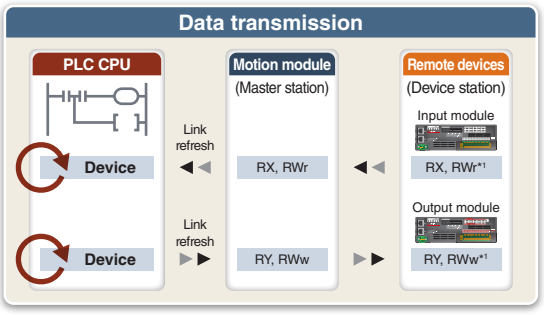

*1. RX and RY are not available for some remote devices.

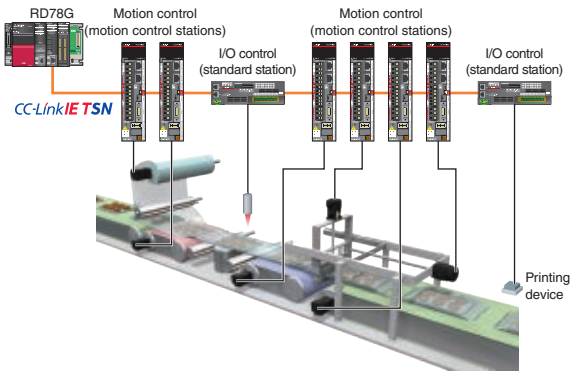

Mark Detection

This function latches data responding to a trigger signal input to a servo amplifier.
The compensation amount is calculated based on the latched data, and the error is compensated using a compensation axis.
A high-accuracy mark detection at 1 µs is possible.

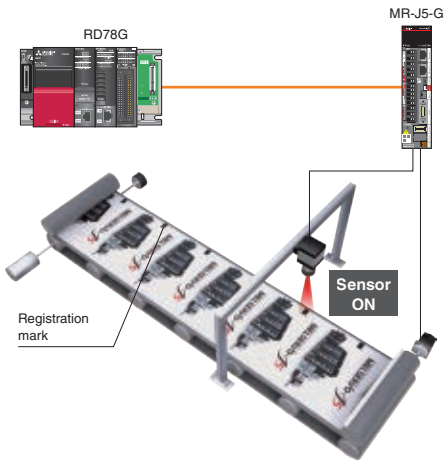

CC-Link IE TSN Safety Communication Function

Simple Motion

CC-Link IE TSN enables building a system where safety and non-safety communications are mixed.
In the following system which integrates safety and non-safety communications, the safety CPU checks the safety signals received via the safety remote I/O module and outputs the safety signals (STO, etc.) to the servo amplifiers. Outputting safety signals via the network eliminates the need for wiring of safety signals to a safety controller and a servo amplifier.
The CC-Link IE TSN safety communication function is available with iQ-R series Motion modules.

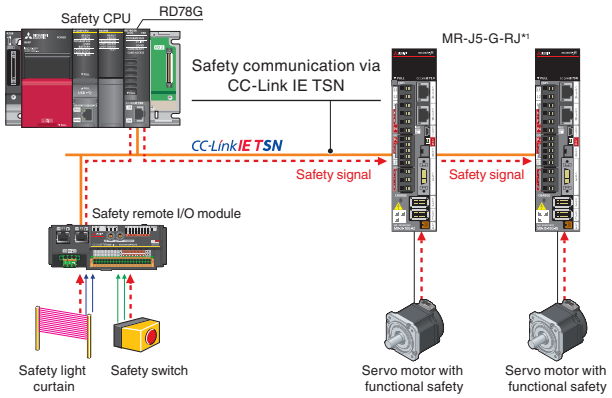

*1. For servo amplifiers that support the safety communication function, refer to "Safety Sub-Functions" in section 1 of this catalog.

Optional Data Monitor

Simple Motion

Servo operation is monitored with extensive servo data acquired via CC-Link IE TSN. The acquired data can be transferred to IT system or transferred and displayed on any user-created GOT screen in the network. The target data for monitoring can be flexibly changed during operation.

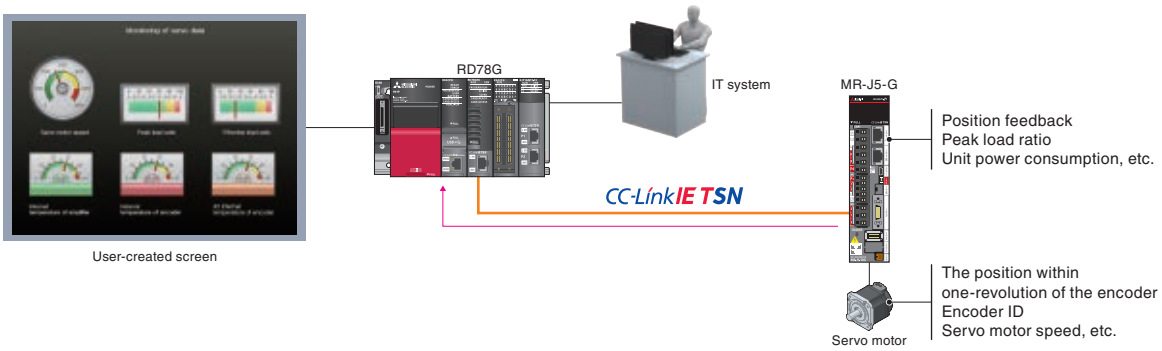

Driver Communication Function*1

Simple Motion

By using the driver communication function of the servo amplifier, the master axis is controlled with the Motion module, while the following axes are controlled by data communication between servo amplifiers (driver communication) without using the Motion module. The Motion module can drive multiple axes by controlling only the master axis.

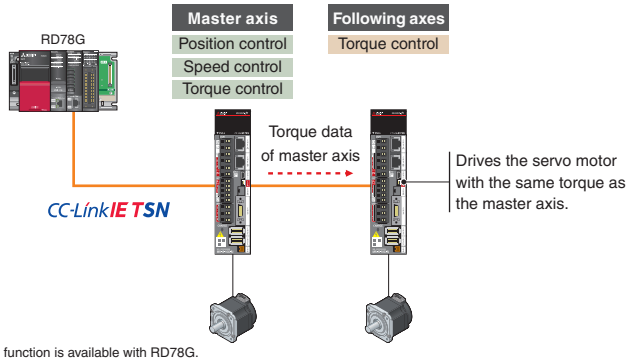

Application examples

[Press machines]	[Material handling systems]
	

*1. This function is available with RD78G.

A Wide Variety of Features

Simple Motion

JOG operation

Moves a workpiece in the designated direction while the JOG start signal is ON.
JOG operation can be executed without completing home position return.

Stop operation functions

The forced stop, the axis stop, and the forced stop of servo amplifiers are available.

Absolute position system

Restores the absolute position of the designated axis.
Once the home position return is executed at the start of the system, it is unnecessary to perform the home position return again when the power is turned ON next time.

Virtual servo amplifier

Enables operations of a virtual servo amplifier as if an actual unit is connected.
When the virtual servo amplifier is set as a servo input axis of synchronous control, the Motion module executes synchronous control with virtually generated input commands.
In addition, this function is used to simulate an axis without an actual connection.

Stroke limit functions

Establish the physical movable range for a machine. The hardware stroke limit function and the software stroke limit function are available.

Home position return control

Establishes a position as the starting point (or "Home position") of positioning control and performs positioning toward that starting point.

Target position change

Changes a target position to a newly designated target position at any timing during the position control (1-axis linear control).

Torque limit function

Limits the torque generated by the servo motor. This function is used to protect the gear reducer and limit the pushing force applied to a stopper. It can control torque so that excessive force will not be applied to loads and machines.

Acceleration/deceleration processing function

Adjusts the acceleration/deceleration of each motion control so that the acceleration/deceleration curve is suitable for the machine.

Event history

Saves the error information and the operation for the module as an event in the CPU module and the Motion module.

Override

Changes the command speed by a specified percentage (0 to 300 %) for all controls to be executed.

One software, many possibilities

Programmable Controller Engineering Software

GX Works3

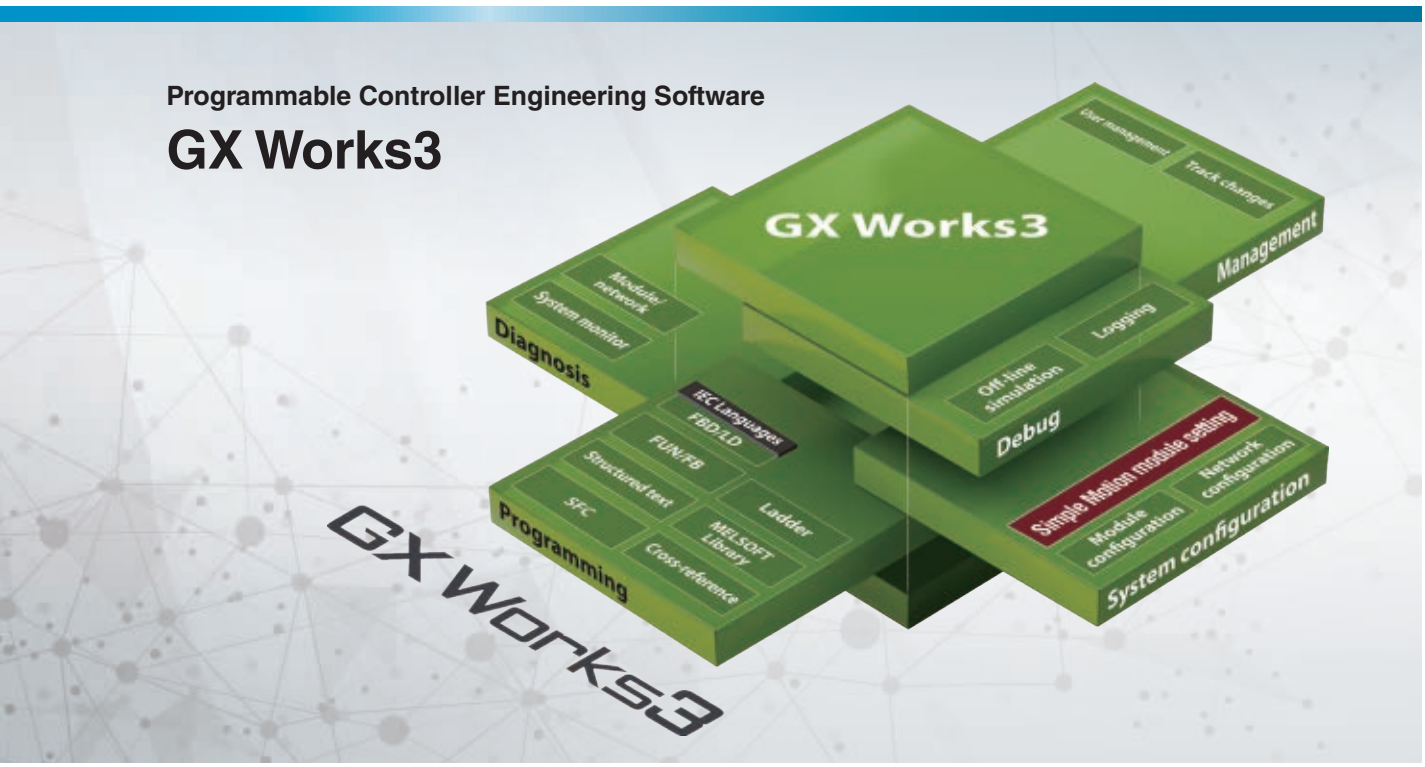

MELSOFT GX Works3 covers various aspects of development processes - parameter settings, servo adjustments, and debugging of Motion modules as well as sequence program creation. This software offers an engineering environment that provides comfortable design environment.

Engineering Environment

Simple Motion

Various features are integrated into GX Works3, which allows users not only to easily create projects but also maintain consistency through the entire development processes.

System Design

- System configuration by simply selecting modules from a list
- Easy parameter settings for each module
- Parameters settable for reduction ratio and electronic gear

Programming

- Easy positioning data creation with a variety of functions
- Synchronous control only with parameter settings
- Highly flexible cam data creation

Debug

- Simulation without actual devices
- Automatic servo adjustments
- Digital oscilloscope that allows operation verification and quick troubleshooting

Maintenance



System Design

System Design

Module configuration

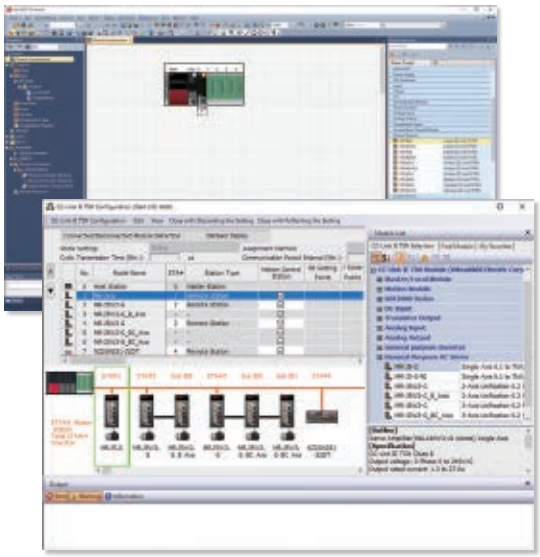

Network configuration

- Module configuration
- Network configuration
- Data settings for servo amplifiers
- Settings for remote I/O modules
- Parameter conversion function

Programming (Positioning)

Programming

Positioning data setting



Offline simulation

Automatic calculation of command speed

- Programming with Ladder, SFC, FBD/LD
- Positioning data settings
- Offline simulation, automatic calculation of command speed

Programming (Advanced Synchronous Control)

Programming

Synchronous control parameter

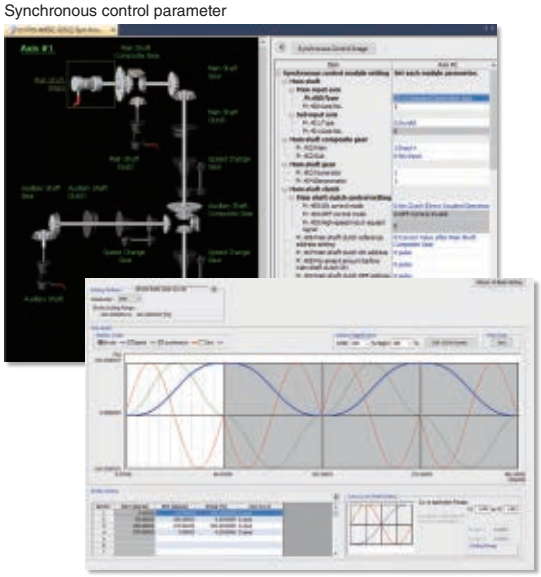

Cam data creation

- Synchronous control parameter
- Cam data creation, cam data list

Debug/Maintenance

Debug Maintenance

Axis monitor

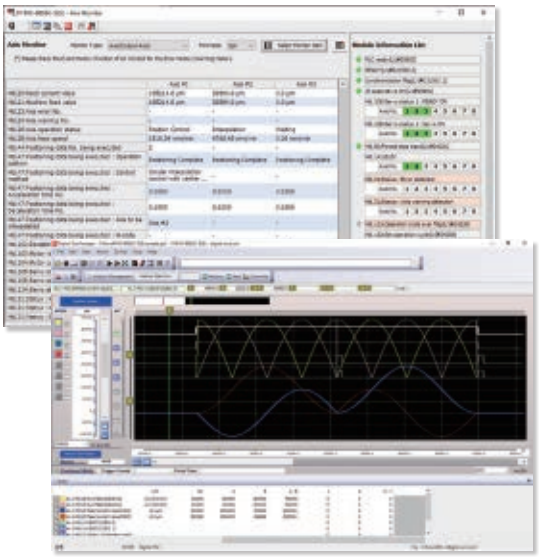

Digital oscilloscope

- Event history
- Current value history, start history, axis monitor
- Servo monitor
- Digital oscilloscope

Unlock new system capabilities together with CC-Link IE TSN

PLCopen® Motion Control FB Mode

PLCopen®

CC-Link IE TSN

Motion Module

RD78GH
RD78G



These Motion modules with multiple-core processors enable to configure a high-speed, large system by supporting the CC-Link IE TSN real-time open network.

- Performs positioning control such as linear interpolation using function blocks. The programming is easy: users just need to set positioning data to the function blocks.
- Connects to various modules such as servo amplifiers and I/O modules via CC-Link IE TSN. This connectivity allows you to configure a servo system more flexibly.
- Supports a consistent engineering environment that is capable of handling tasks ranging from system design to debugging and maintenance.

Product Lines

PLCopen®



CC-Link IE TSN
MELSEC iQ-R series

RD78GHV
RD78GHW

- Maximum number of control axes:
  RD78GHV: 128 axes/module
  RD78GHW: 256 axes/module
- Minimum operation cycle *1: 31.25 µs
- ST language program capacity:
  Built-in ROM max. 64 MB
  + SD memory card

RD78GHV/RD78GHW are designed with a quad-core processor that enables higher-speed control. These Motion modules can be directly programmed to distribute load control with PLC CPUs.
This ensures that performance will not be degraded even when the number of axes is increased.



CC-Link IE TSN
MELSEC iQ-R series

RD78G4/RD78G8
RD78G16/RD78G32
RD78G64

- Maximum number of control axes:
  RD78G64: 64 axes/module
- Minimum operation cycle *1: 62.5 µs
- ST language program capacity:
  Built-in ROM max. 16 MB + SD memory card

RD78G4/RD78G8/RD78G16/RD78G32/RD78G64 are designed with a dual-core processor and can be programmed to enable various types of control, such as positioning, synchronous, cam, speed, and torque control.

*1. The operation cycle varies by the number of control axes and the models.

Improved Performance

PLCopen®

The minimum operation cycle of RD78GH in PLCopen® motion control FB mode is approximately 4.1 to 6.2 times faster than that of the previous models, and the number of maximum control axes is 4 to 8 times more. The data from the servo amplifiers and input/output signals can be received at high speeds, which reduces the cycle time.

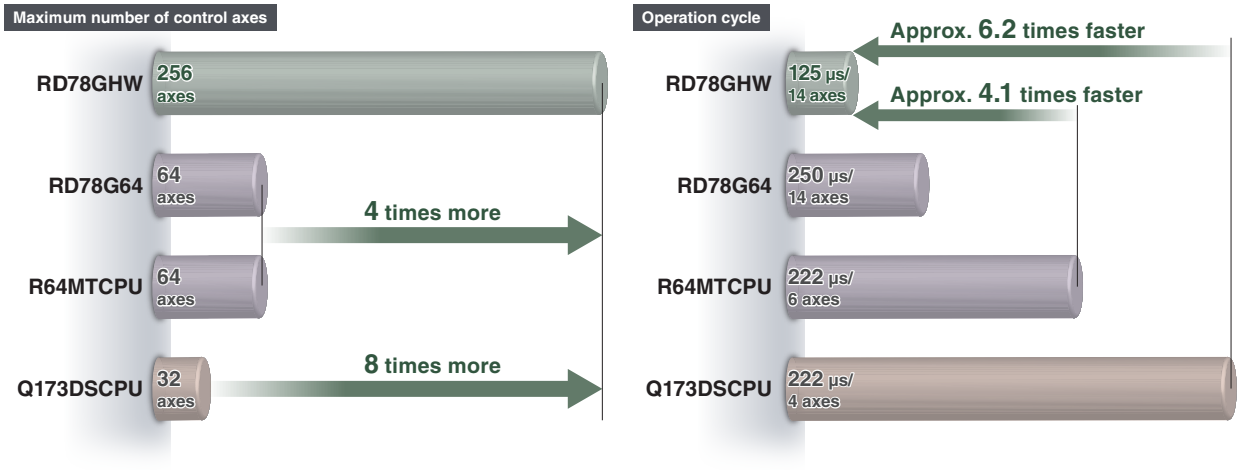

System Configuration

PLCopen®

The Motion Module executes motion control while functioning as a master station of CC-Link IE TSN.*1
This feature enables users to create a system more flexibly by connecting various devices, such as servo amplifiers, remote I/O modules, and TCP/IP devices, to the Motion module.*2

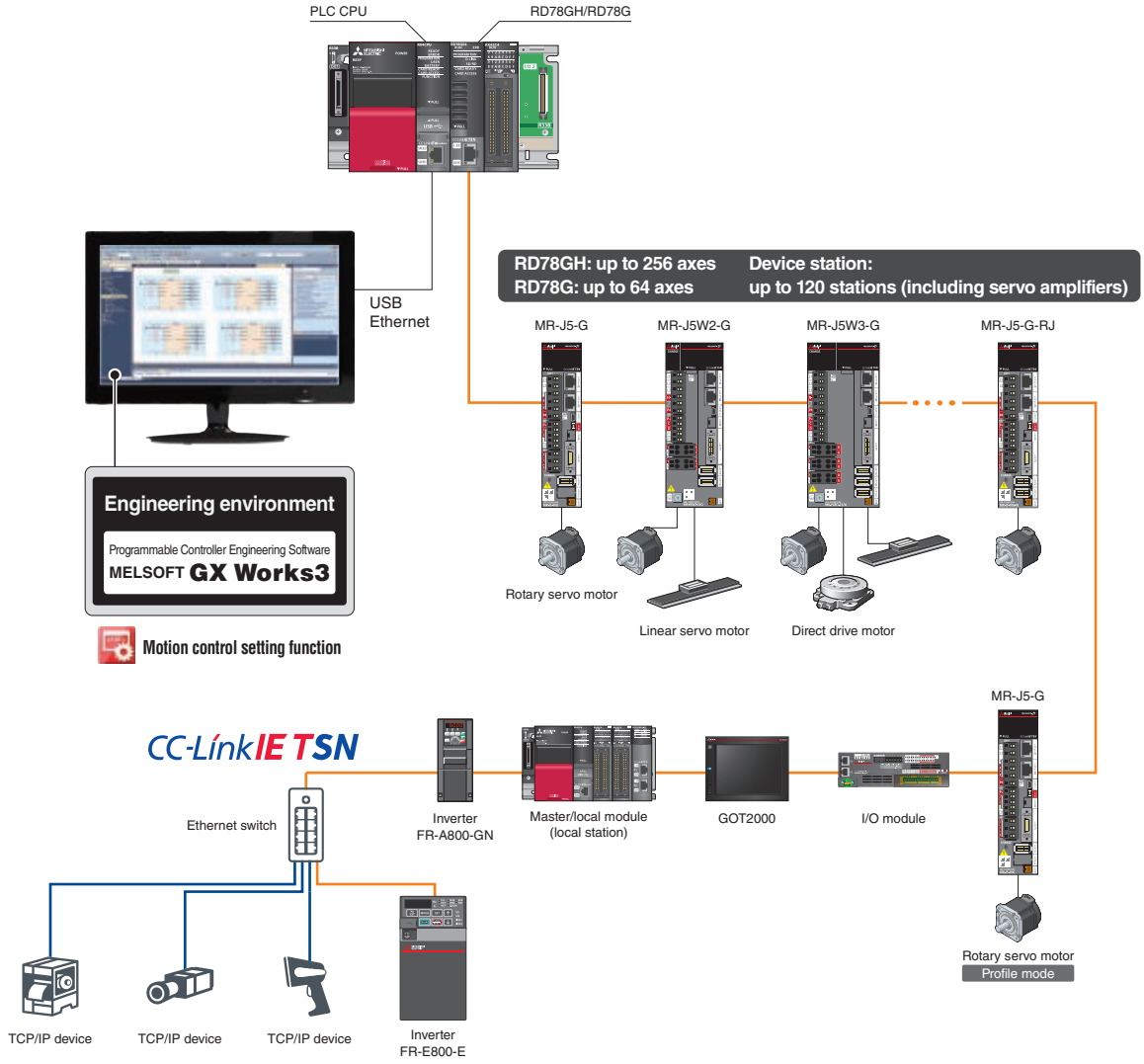

*1. Sub-master station is not supported.
*2. Refer to manuals for precautions when CC-Link IE TSN Class B and A devices are mixed.

Inter-Module Synchronization

PLCopen®

The inter-module synchronization function can synchronize the control timing between multiple Motion modules on the same base unit.
Even different machines can be synchronized through this function when each machine uses Motion modules.

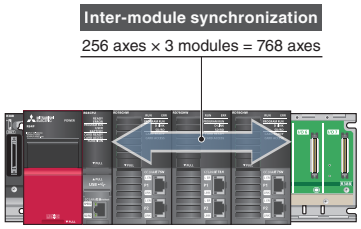

Positioning Control

PLCopen®

Two types of positioning control are available: single-axis and multi-axis positioning control.
This variety allows you to meet various control needs.

Item	Control types	
Single-axis control	Positioning	Absolute positioning
		Relative positioning
	Homing	
	JOG operation	

Item	Control types	
Multi-axis control	Linear interpolation	Absolute linear interpolation
		Relative linear interpolation
	Circular interpolation	Absolute circular interpolation
		Relative circular interpolation
	Multiple axes positioning data operation	

Main Control

Linear interpolation

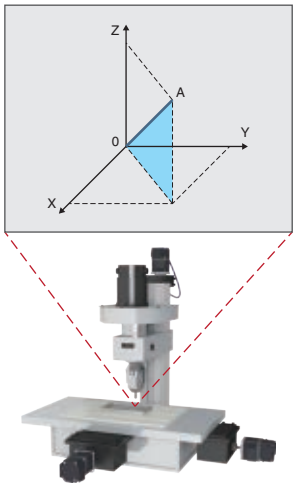

Circular interpolation

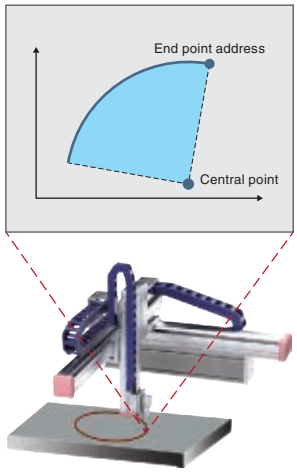

Multiple axes positioning data operation

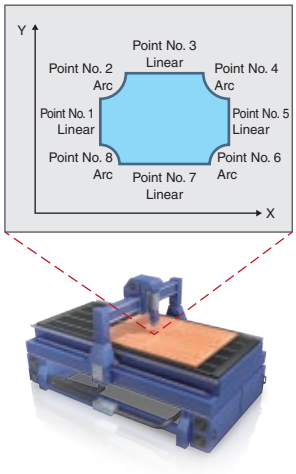

Acceleration/Deceleration Methods

PLCopen®

Three types of acceleration/deceleration methods are available: trapezoidal acceleration/deceleration, jerk acceleration/deceleration, and acceleration/deceleration time fixed.

Trapezoidal acceleration/deceleration

After starting, maximum acceleration is maintained until the target speed is reached.
For example, when a vehicle loaded with a workpiece accelerates suddenly, the workpiece will swing back and forth due to the impact of the sudden acceleration.
To reduce impacts and vibrations in a case such as this, the vehicle must accelerate at a slower rate.
The speed creates a trapezoidal shape.

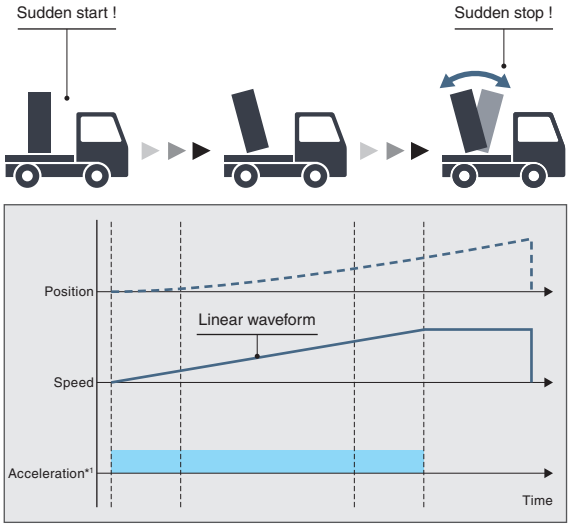

Jerk acceleration/deceleration

The acceleration changes gradually.
For example, when a vehicle loaded with a workpiece accelerates gradually, the load will not swing back and forth after acceleration.
The jerk is maintained during acceleration. When the vehicle has almost reached the target speed, the jerk is decelerated. Adjusting jerk in this way achieves smooth acceleration/deceleration while also shortening the time it takes to reach the target speed.
The speed creates a S-curve shape.

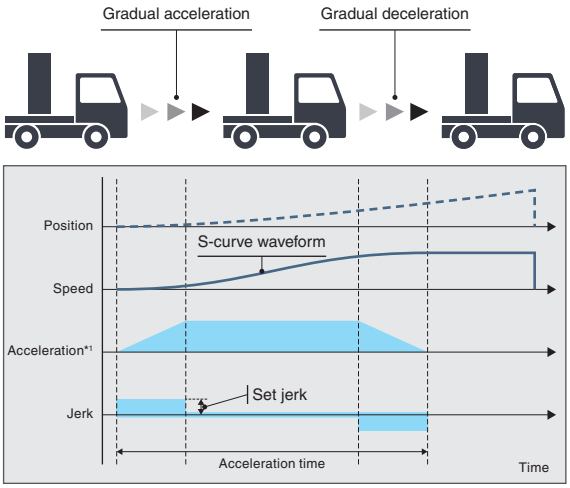

Acceleration/deceleration time fixed method

This method executes acceleration/deceleration based on the time specified, regardless of the commanded speed.

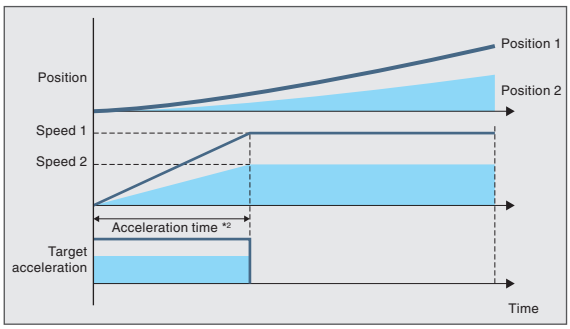

*1. Input acceleration.
*2. Specify acceleration time.

MEMO

Synchronous Control

PLCopen®

Synchronous control is performed using function blocks that operate as software-based mechanical modules such as gears, shafts, speed change gears, and cams.

- Positioning and synchronous control can be performed together in the same program.
- Synchronous control using a synchronous encoder as an input axis is also possible.
- The output axis is operated based on cam data (operation profile).

Flexibly Combining Synchronous Modules

The number and the combination of the synchronous modules are flexibly selected, achieving optimized operation.

[An example of packing machine program]

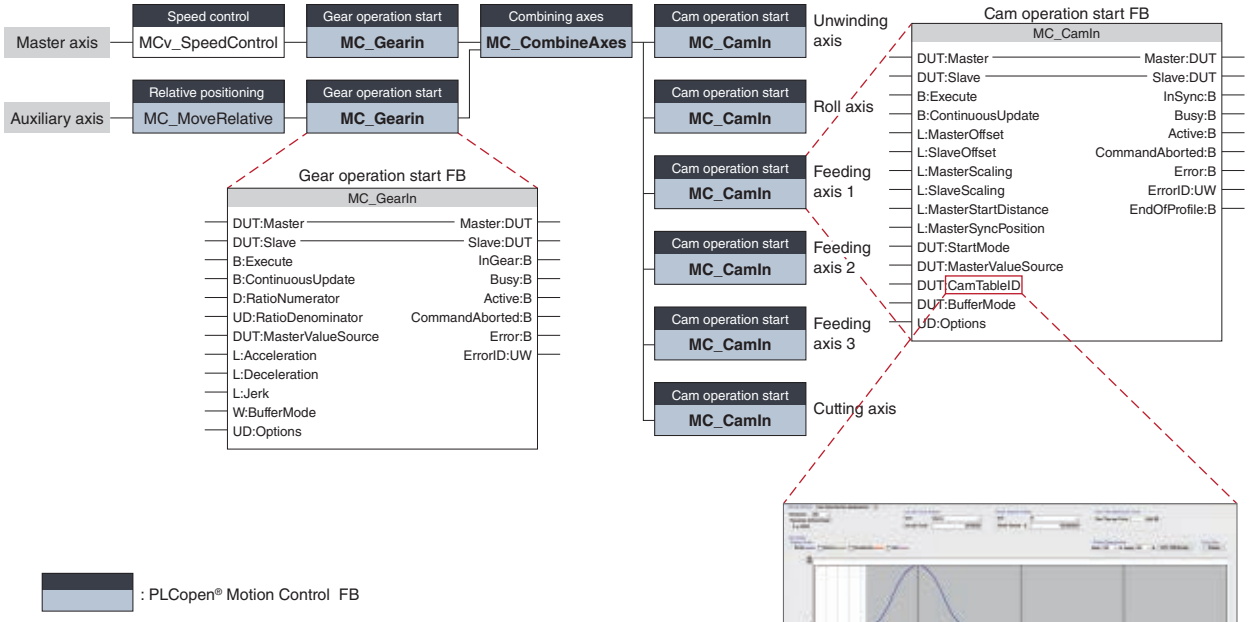

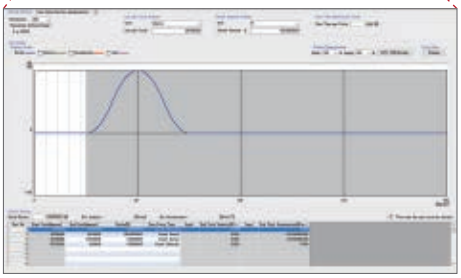

Cam data (operation profile)

Application examples

[Packing machines]

This application synchronizes all the axes, from the cutting axis through the unwinding axis, with the master axis. Cutting operation is performed with the cutting axis and the feeding axis 3.

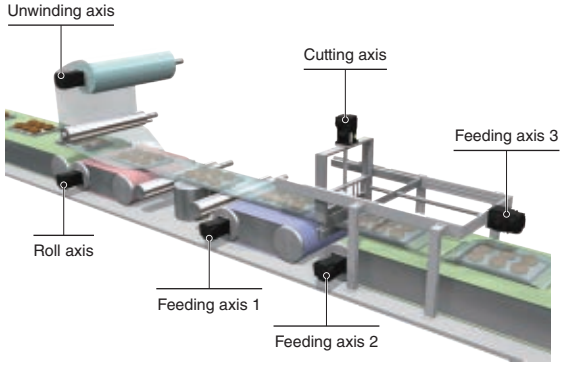

Time chart of film cutting operation

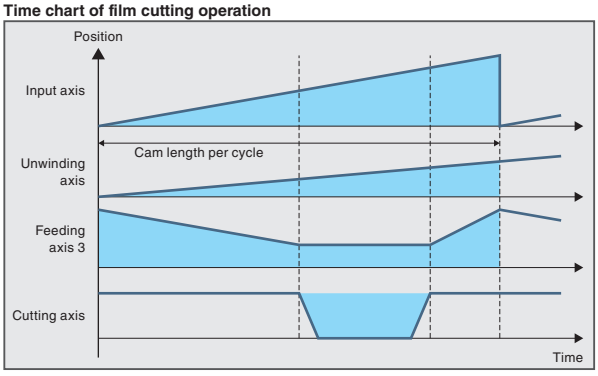

Advanced Synchronous Control FB Settings with Graphic-Based Interface

Synchronous control can be executed by setting synchronous modules with parameters and starting the advanced synchronous control FB. Synchronous modules such as the auxiliary shafts, gears, clutches, and speed change gears can be set with a graphic-based interface.

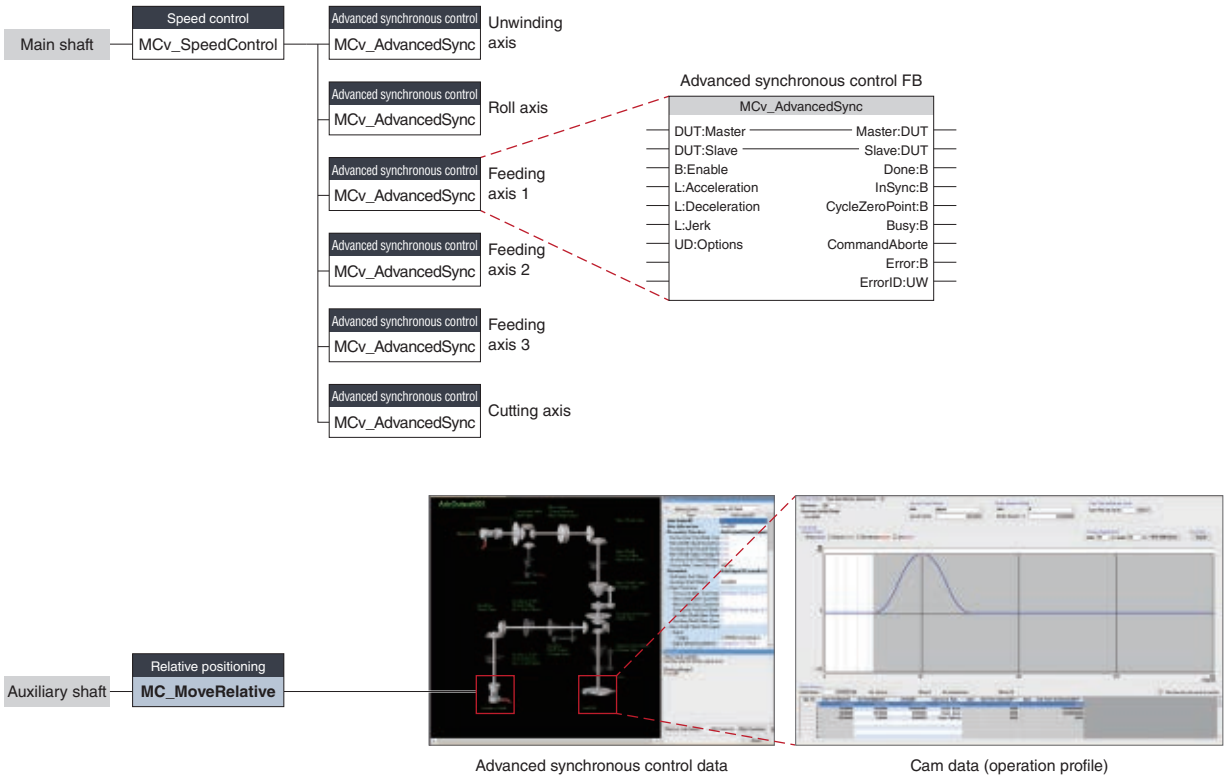

: PLCopen® Motion Control FB

Advanced synchronous control data

Images of enabled synchronous modules are highlighted, allowing easy verification of set data through visualization.

- Input axis data
- Synchronous parameter (output axis)
- Auxiliary shaft data
- Clutch data
- Gear data
- Speed change gear data
- Cam data (operation profile)
- Cam waveform type

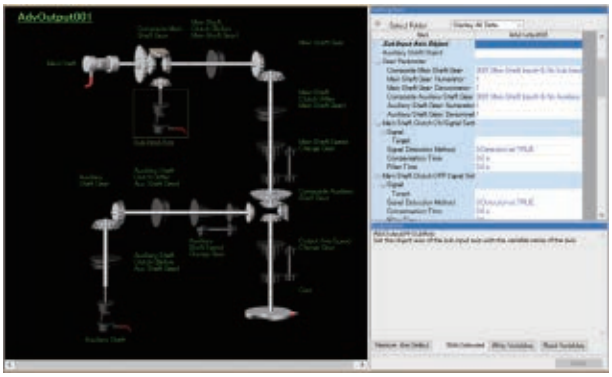

Clutch

The clutch is used to transmit/disengage command pulses from the main/auxiliary shaft input side through turning the clutch ON/OFF, which controls the operation/stop of the output axis.
The clutch can be set to the main shaft clutch and the auxiliary shaft clutch.

Clutch ON control mode	Clutch OFF control mode
Invalid (Direct coupled operation)	Invalid (OFF control invalid)
Clutch command	Clutch command (One-shot operation)
Clutch command leading edge	Clutch command leading edge
Clutch command trailing edge	Clutch command trailing edge
Address mode	Address mode
I/O data specification	I/O data specification

A clutch can be used through the advanced synchronous control FB.

Advanced synchronous control data

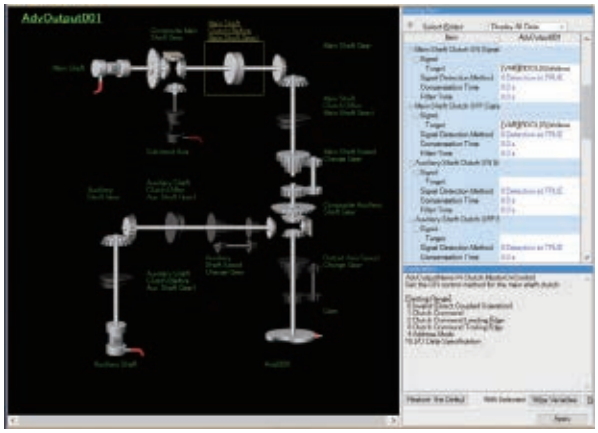

Restarting synchronous control

In case that the synchronous positions become misaligned due to an emergency stop, etc., synchronous control can be restarted by using the synchronous control analysis mode.

In the synchronous control analysis mode, the cam set position is updated on the basis of the input axis. The synchronous position can be aligned using the updated cam set position before starting synchronous control.

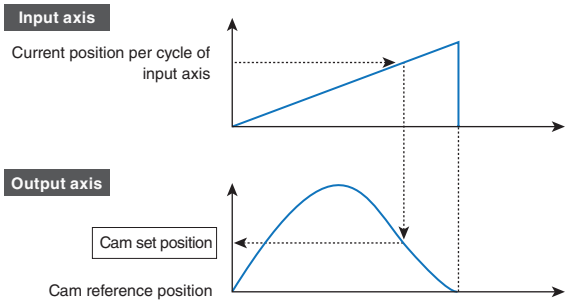

Synchronous Encoder

The Motion module easily performs synchronous control by setting a synchronous encoder to "Real encoder axis" and creating a program with function blocks.
The number of command pulses can be adjusted using the function block (MC_Gearin) or a parameter.
An encoder*1 can be connected via a servo amplifier and used as a synchronous encoder axis.

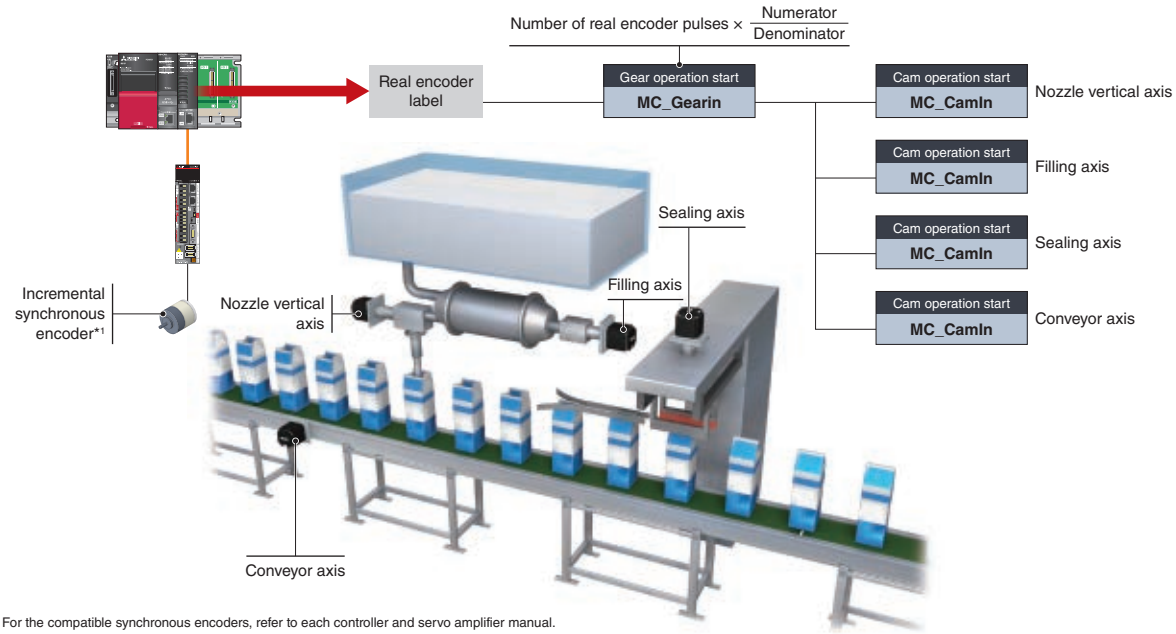

*1. For the compatible synchronous encoders, refer to each controller and servo amplifier manual.

Switching Cam Control

The cam being executed can be flexibly switched to another cam without stopping the servo motor. Similarly, cam control is smoothly switched to position control with no need of stopping the motor.

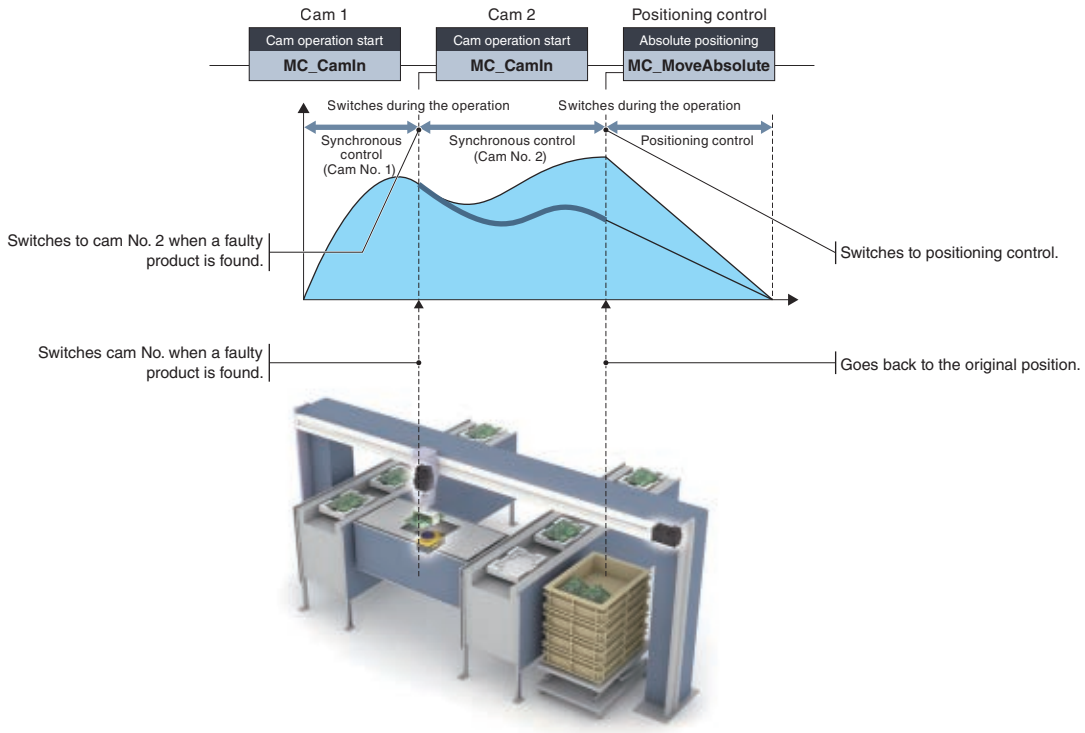

Cam Data (Operation Profile Data)

PLCopen®

Create cam data (operation profile data*1) according to your application. The created cam data is used to control an output axis.

*1. "Operation profile data" is a general name for waveform data, which is used for various applications.

Cam Operation

The following three cam operations are available: linear operation, two-way operation, and feed operation. Choose one according to your application.

Linear operation

The cam pattern is a linear line.
This pattern is used for a ball screw and a rotary table.

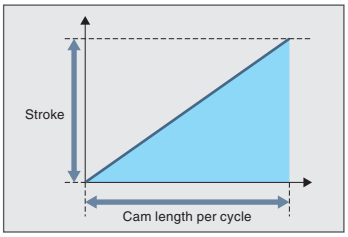

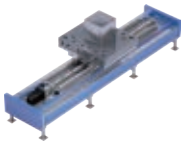

Ball screw [Unit: mm]

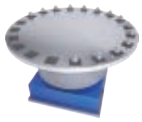

Rotary table [Unit: degree]

Two-way operation

The beginning and the end of the cam pattern are the same.
Mechanical cams fall into this category.

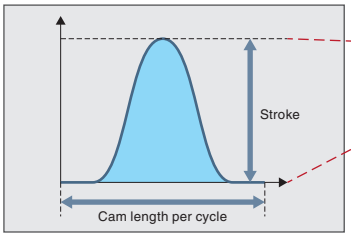

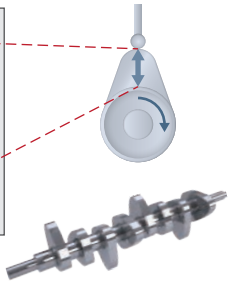

Crankshaft

Feed operation

The beginning and the end of the cam pattern differ.
This pattern is used for fixed-amount feed operations and intermittent operations.
Set the end point for the feed operation to a position of your choice.

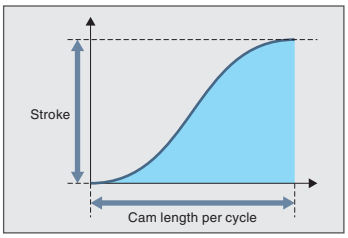



Belt conveyor

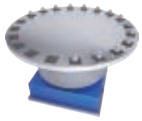

Rotary table [Unit: degree]

Application examples

[Machine with all axes synchronized]



All the axes of the machine are in synchronization.

[Machine with only certain of the axes synchronized]

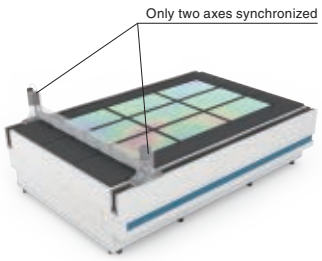

Only two axes are synchronized.
The other axes perform positioning operation while the two axes execute synchronous control.

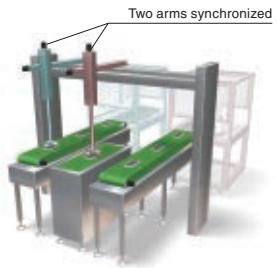

The two arms can avoid interference by synchronizing with each other, shortening the cycle time.

Cam Data Types

The cam data (operation profile data) has the following two types.

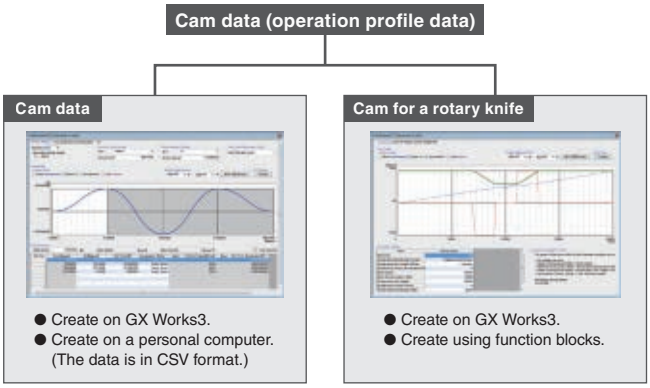

Easy Cam Creation for a Rotary Knife

Cam for a rotary knife is easily created by setting the sheet length and sheet synchronization width.

[Automatic cam creation from the motion control FB]
Setting the sheet length and sheet synchronization width, etc., to the function block and starting it create a cam automatically.

[Cam creation with MELSOFT GX Works3]
Setting the sheet length and sheet synchronization width, etc. creates a cam.

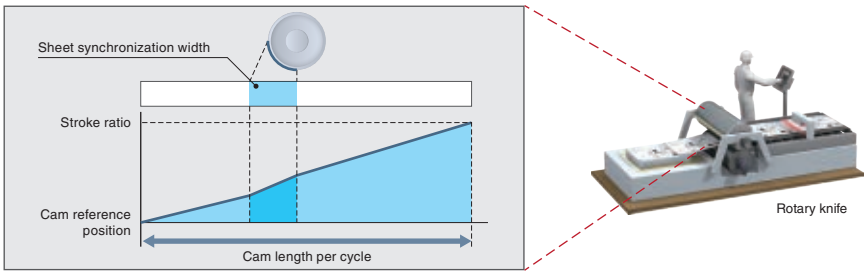

Cam Data in CSV Format

The cam data (operation profile data) in a CSV format on a personal computer can be imported directly to a Motion module.

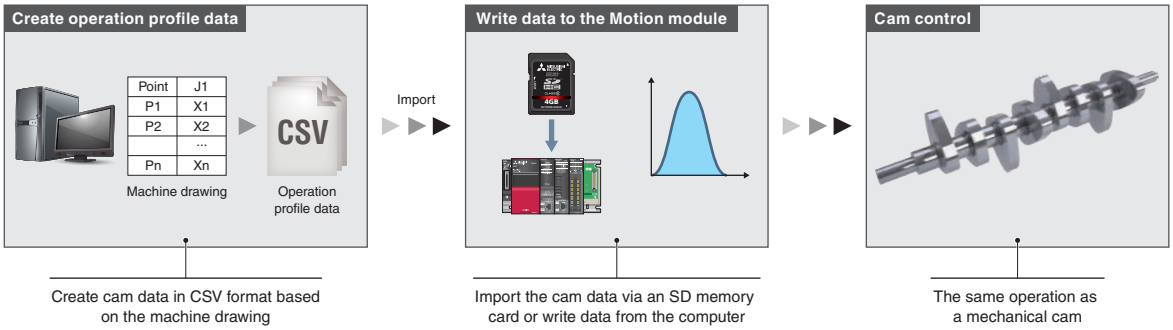

Servo Amplifier Control Mode

PLCopen®

The servo amplifier has three control modes: position, velocity, and torque control modes.
Execution of MC_MoveVelocity transitions the mode to the velocity control mode, and execution of MC_TorqueControl to the torque control mode.
In the velocity control mode or torque control mode, the mode transitions to the position control mode in the following cases.

- At stop completion or error occurrence
- When a Motion control FB is changed/aborted

[Control mode]

Position control mode:	Moves to the target position (Speed control that includes position loop)
Velocity control mode:	Drives at the specified speed (Speed control that does not include position loop)
Torque control mode:	Drives at the specified torque

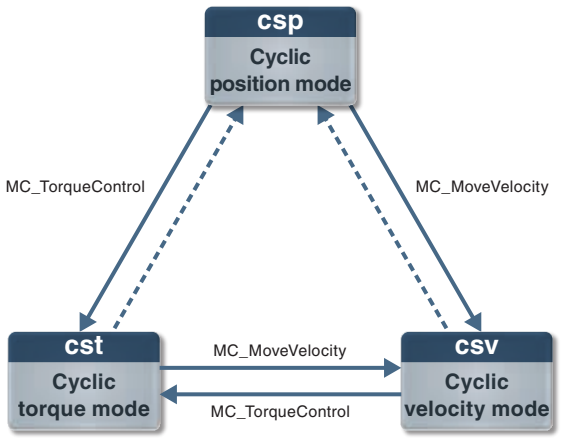

Selectable Speed Control to Best Fit Your System Needs

PLCopen®

Two types of speed control are available: speed control that includes position loop and speed control that does not include position loop.

Speed Control That Does Not Include Position Loop

- Control mode setting of the servo amplifier: velocity control mode
- Minimizes speed deviation by flexibly responding to speed changes, such as those that occur when the load changes.
- Suitable for machines which keep driving the motors at constant speed, such as a wind/unwind machine.

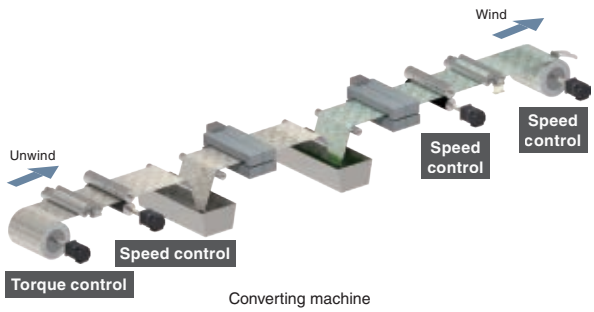

Converting machine

Speed Control That Includes Position Loop

- Control mode setting of the servo amplifier: position control mode
- Suitable for operations that repeatedly switch between speed and position control.

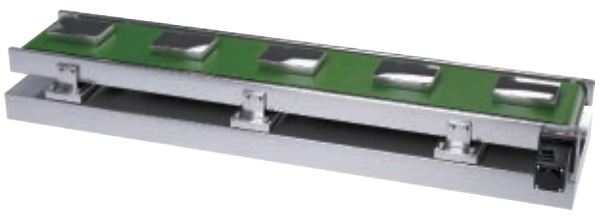

Belt conveyor

Torque Control

PLCopen®

Torque Control Mode

The axes in torque control are controlled to run at the constant torque by following the torque command.
When the load is light and the speed increases to the set limit, the torque control switches to speed control.

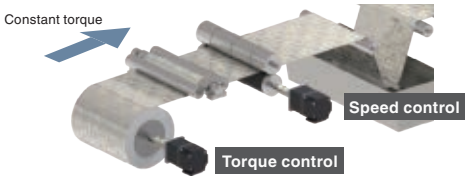

Application example

[Unwinding axis of converting machines]
Torque control unwinds film at constant tension to prevent wrinkling in the film.
The tension can be kept constant by sequentially controlling the torque commands.
This type of control is perfect for unwinding machines that need to keep the tension of unwound materials constant.

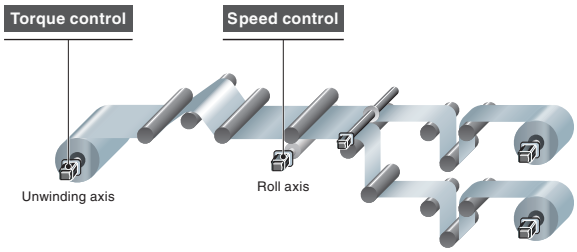

Continuous Operation to Torque Control Mode

The axes are controlled to run at the constant torque by following the torque command while the current position is being tracked.
The position control can be switched smoothly to the torque control without stopping the servo motor.

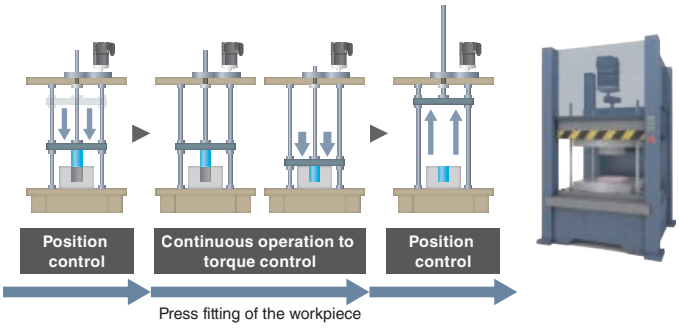

Application example

[An example of continuous operation to torque control]
This control is applicable to a variety of machines, such as bonding, press-fit, punching, and clamping machines.

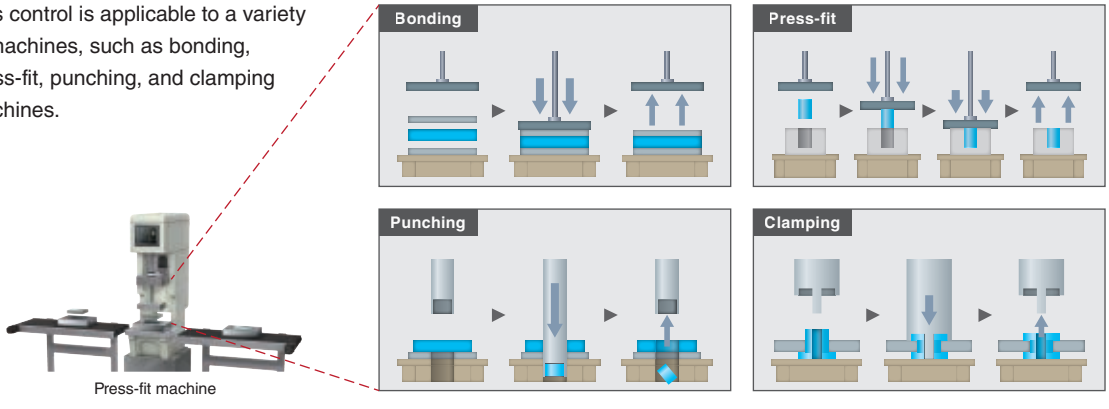

Flexible System Configuration with Multiple Topologies

PLCopen®

Line, star, and ring topologies are supported, allowing a flexible system configuration.

[Line topology]

Use a line topology for high-speed, high-performance control. This is realized when a system is configured with CC-Link IE TSN-compatible device stations only without additional branch lines.

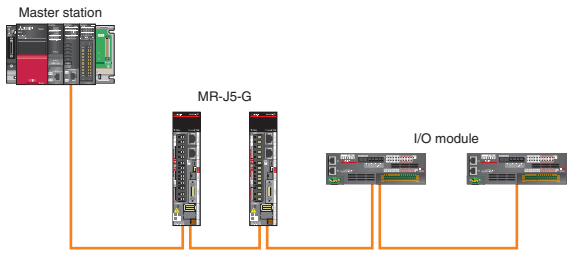

[Star topology]

Choose a star topology if a more flexible system configuration is needed. Using Ethernet switches, device stations can be easily distributed to achieve the desired system configuration.

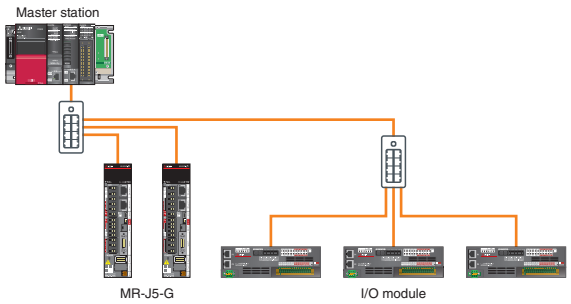

[Ring topology]*1

A ring topology is ideal for systems requiring high reliability. Data communication continues via multi-directional communication with normal stations even if a cable is disconnected or an error occurs on a device station.

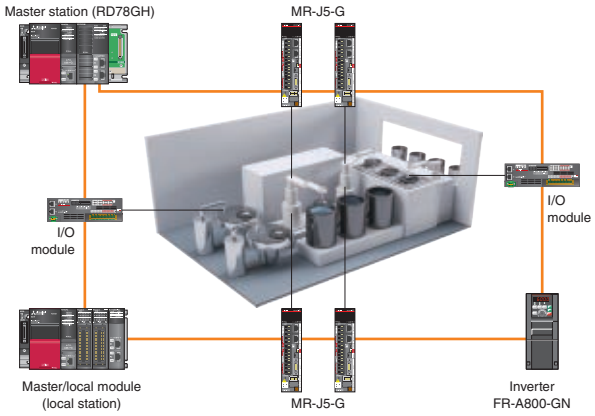

*1. Available with RD78GH

Servo System Recorder

PLCopen®

The Motion module automatically collects data of all servo amplifiers when an error occurs. The collected data, such as the command and the feedback values, greatly helps you analyze the error cause.

- Automatic collection of data, such as position, speed, and torque data, without programming
- Collecting data of all axes helps you locate the error cause even when the error is caused by the other axes without an error.
- The co-recording function collects data even when an error occurs in other recording devices.

[Data collection]

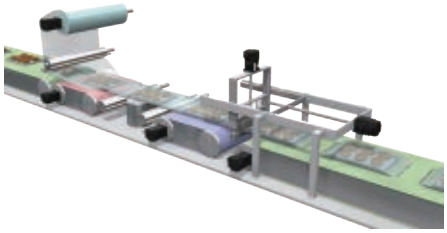

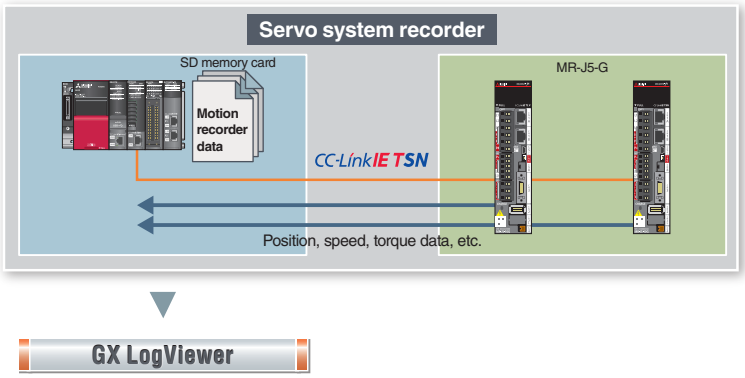

GX LogViewer

The collected data can be checked on GX LogViewer.
The operation status before and after an error is displayed in waveforms, which allows more detailed analysis and identification of the error cause.

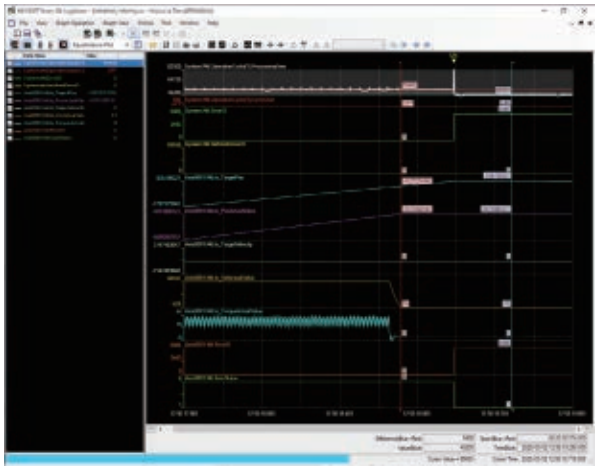

[Features]

- Displays the collected data and events graphically.
- Enables users to adjust a graph easily by automatic adjustment function and drag operation.

Analyzing Data

Analyzing operation transition of the Motion modules and the servo amplifiers before and after an error helps you locate the error cause.

[Example]

1. An error has occurred.
2. The speed and torque decreased even though the command position was increasing.

By analyzing the data in the recorder (1 and 2 above), users can find out a possible cause of the error, such as a disconnection of a power cable during operation.

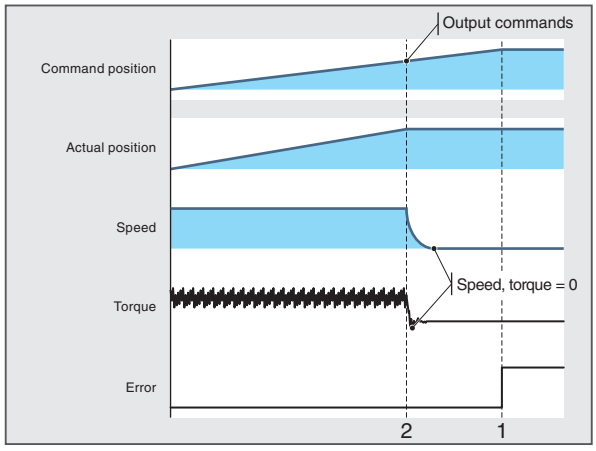

Touch Probe Function

PLCopen®

This function latches data responding to a trigger signal input to a servo amplifier.
The compensation amount is calculated based on the latched data, and the error is compensated using a compensation axis.
A high-accuracy touch probe at 1 µs is possible.

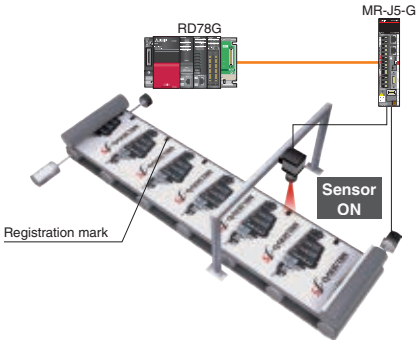

Monitoring of Servo Data

PLCopen®

Servo data can be monitored during operation. Operation status of servo amplifiers and servo motors can be obtained via CC-Link IE TSN and transferred to IT system or displayed on any user-created GOT screen in the network.

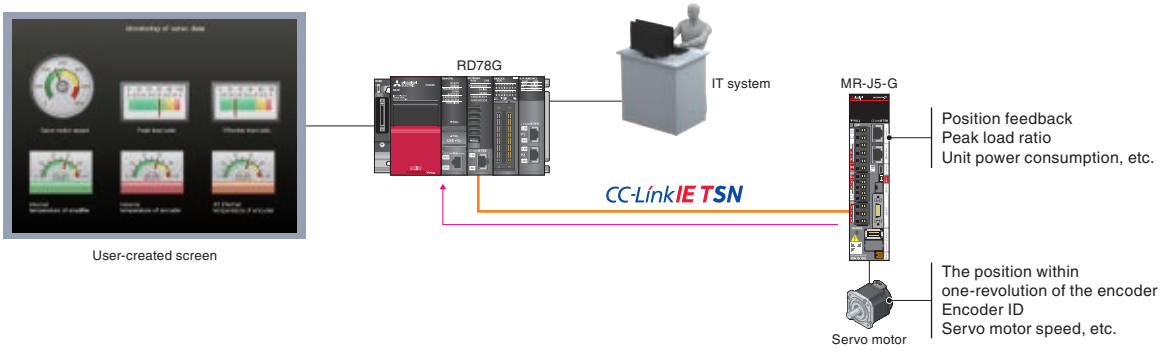

CC-Link IE TSN Safety Communication Function

PLCopen®

CC-Link IE TSN enables building a system where safety and non-safety communications are mixed.
In the following system which integrates safety and non-safety communications, the safety CPU checks the safety signals received via the safety remote I/O module and outputs the safety signals (STO, etc.) to the servo amplifiers. Outputting safety signals via the network eliminates the need for wiring of safety signals to a safety controller and a servo amplifier. The CC-Link IE TSN safety communication function is available with iQ-R series Motion modules.

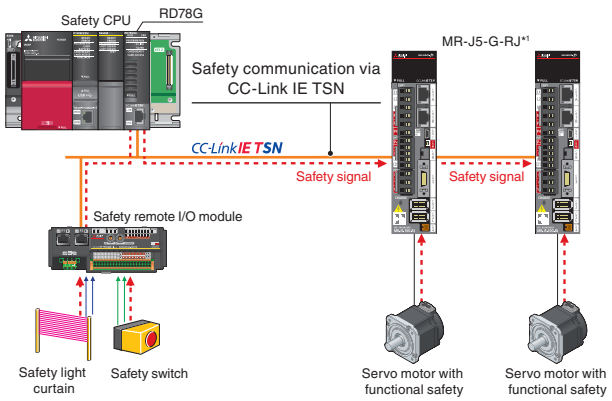

*1. For servo amplifiers that support the safety communication function, refer to "Safety Sub-Functions" in section 1 of this catalog.

A Wide Variety of Features

PLCopen®

JOG operation

The Motion module outputs commands to an axis and operates the axis to the specified direction while the positive/reverse rotation JOG command is inputted.

Absolute position system

Restores the absolute position of the designated axis.
Once the home position return is executed at the start of the system, it is unnecessary to perform the home position return again when the power is turned ON next time.

Stroke limit functions

Establish the physical movable range for a machine. The hardware stroke limit function and the software stroke limit function are available.

Target position change

A target position can be changed using the buffer mode.
During execution of an FB for position control, another FB to move to a new target position can be started at any timing.

Acceleration/deceleration processing function

Adjusts the acceleration/deceleration of each motion control so that the acceleration/deceleration curve is suitable for the machine.

Override

Sets the factor for the velocity and performs the control to change the target velocity.
The following two methods are available for changing the override factor: a method of using the dedicated FB and a method of changing the control data.

Stop operation functions

The forced stop, the axis stop, the axes group stop, and the forced stop of the servo amplifier are available.

Axis emulate

Enables operations of a virtual servo amplifier as if an actual unit is connected.
This function enables to debug the user program at the startup of the device or verify the positioning operation.

File transfer

Executes file operation and data backup/restore based on the specified command.

Torque limit function

Limits the torque generated by the servo motor. This function is used to protect the gear reducer and limit the pushing force applied to a stopper. It can control torque so that excessive force will not be applied to loads and machines.
The following two methods are available for changing the torque limit value: a method of using the dedicated FB and a method of changing the control data.

Event history

Saves the error information and the operation for the module as an event in the CPU module and the Motion module.

One software, many possibilities

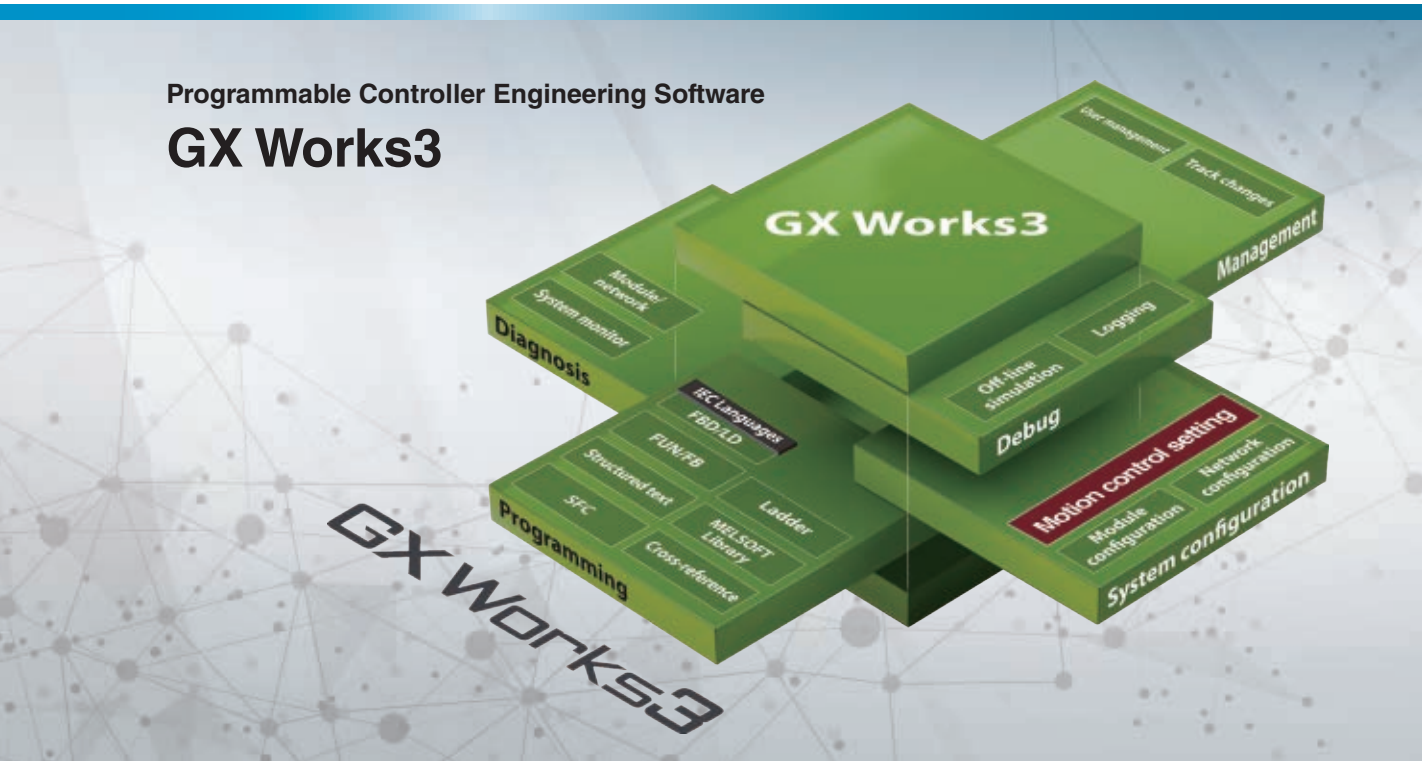

MELSOFT GX Works3 covers various aspects of development processes - parameter settings, servo adjustments, and debugging of Motion modules as well as sequence program creation. This software offers an engineering environment that provides comfortable design environment.

Engineering Environment

Various features are integrated into GX Works3, which allows users not only to easily create projects but also maintain consistency through the entire development processes.

System Design → Programming → Debug → Maintenance

System Design

- Network configuration settings
- Automatic detection of network configuration

Programming

- Easy programming in ST language
- More intuitive programming, which eliminates the need to remember devices or buffer memory addresses
- Easy access to axis information
- Operation profile data

Debug

- Various monitor functions, such as axis monitor, and ST language program monitor
- A simulator that debugs a program without an actual machine
- Real-time monitor of GX LogViewer

Maintenance

- Various monitor functions, such as axis monitor, and event history
- Security key authentication

Network Configuration Settings

PLCopen®

[Network configuration settings]

- Intuitive network settings with drag-and-drop operations and a graphical screen view

[Automatic detection]

- By clicking the [Connected/Disconnected Module Detection] button, the connection status of device stations is automatically detected and the CC-Link IE TSN configuration screen is generated.



Operation Profile Data with Simple Settings

PLCopen®

Operation profile data, such as cam data and cam for a rotary knife, is easily created.

- The cam graph can be flexibly and easily created through drag & drop. The waveform is changed according to the pointer's movement.
- Stroke, speed, acceleration, and jerk can be set while monitoring the changes on the graph.
- By setting "5th Curve (Adj)" for the cam curve types, the speed on a section border becomes smooth.
- Operation profile data for a rotary knife can be automatically generated by settings sheet length, synchronization width, cam resolution, etc.
- The created operation profile data can be checked on the list.

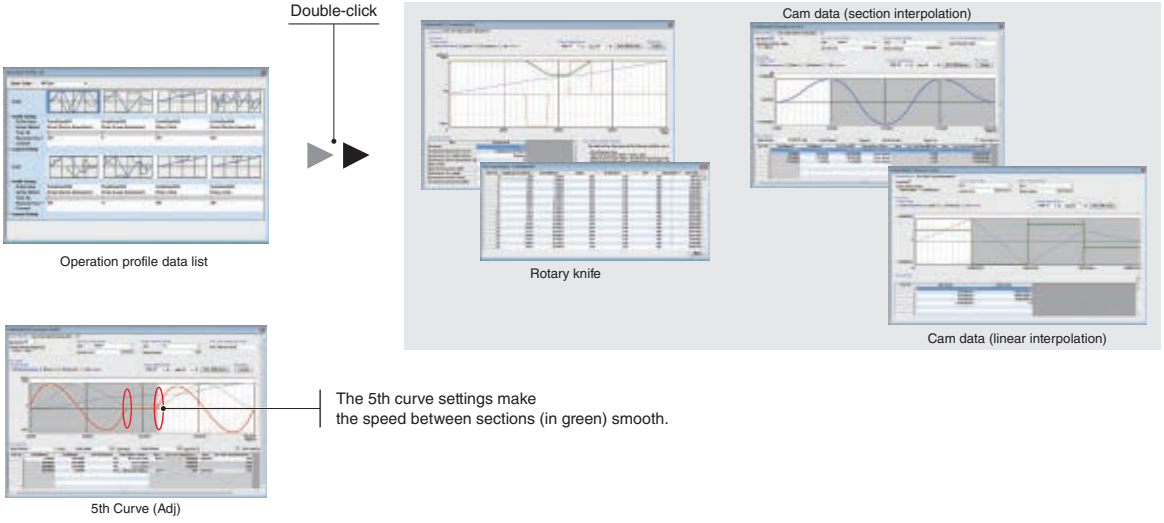

Easy Programming through Structured Text Language

PLCopen®

- Structured text programs are composed of function blocks, increasing program readability.
- Modularization of the programs increases their reusability.
- The consistent, common operability on a single engineering tool improves usability further.
- A wide selection of programming elements in the MELSOFT Library contributes to reducing programming time.
- The program is created by dragging & dropping programming elements, which simplifies the programming process.
- A startup time is reduced using the simulator of MELSOFT GX Works3 that can debug a program without an actual machine.

Programming Using Labels

- The control axes of the Motion modules and I/O signals are defined as label variables, which enables easy reuse of programs and helps to improve programming efficiency.
- The global labels created in the Motion module project can be used in PLC CPUs.

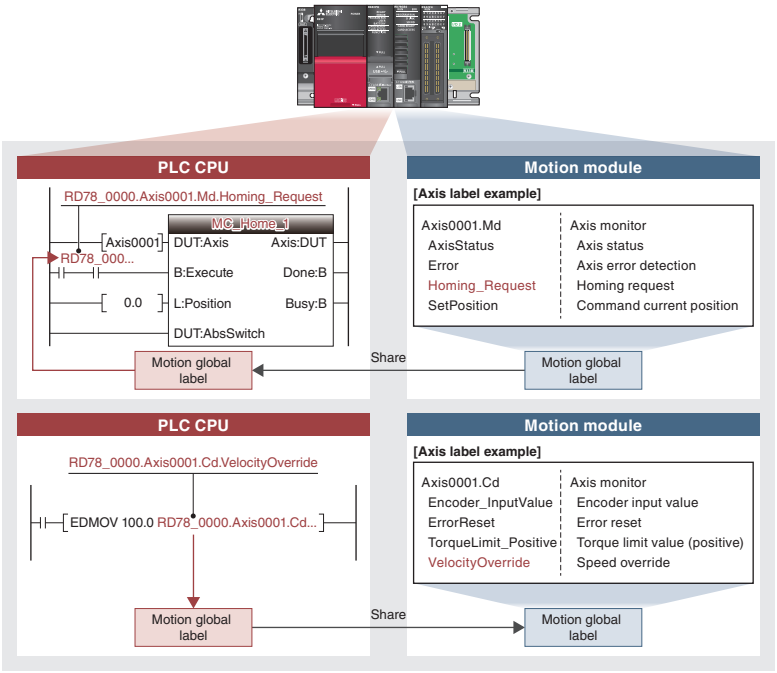

[Reading label data in Motion module]
The axis label data created in the Motion module can be read by the PLC CPU.

[Writing data to labels in Motion module]
Data in the PLC CPU program can be written to the axis labels in the Motion module.

Axis Information is Easily Accessible

- Axis label variables can be used as an argument to refer axes in positioning function blocks.
- IntelliSense® function reduces programming mistakes.
- Access by variable names increases readability.

[Structured text editor]

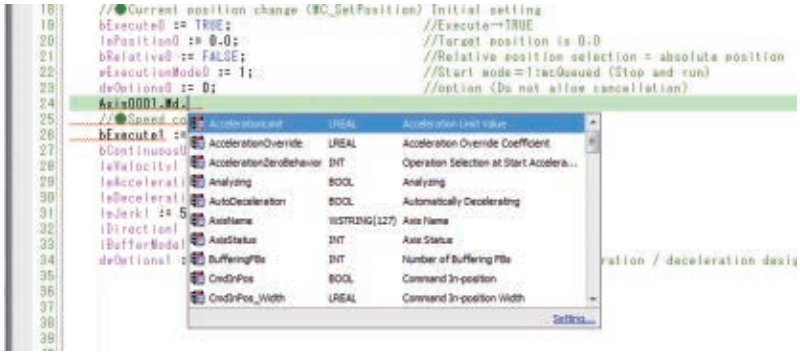

GX LogViewer with Enhanced Waveform Display

PLCopen®

The graph data of both PLC CPU modules and Motion modules can be checked on GX LogViewer. This tool helps you efficiently analyze data from two different modules. The following two functions are provided for logging: data logging function (offline) and real-time monitor.

Data Logging Function

The function performs data logging by a specified time interval based on the logging setting (trigger condition, data collection) written to the Motion module from the engineering tool. The results are saved as a data logging file.
Up to 10 data settings can be simultaneously logged for the Motion module.
The operation status before and after an error is displayed in waveforms, which allows more detailed analysis and identification of the error cause.

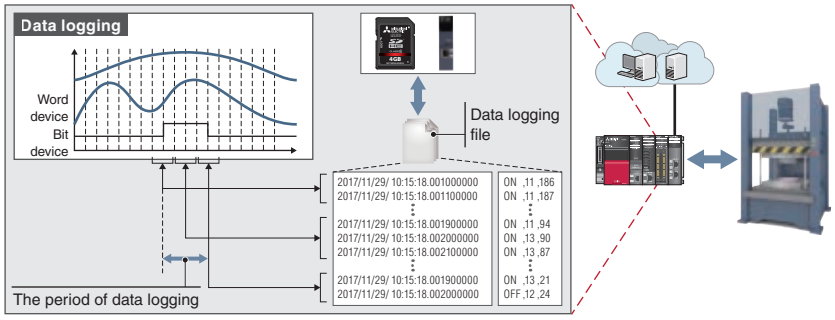

Real-Time Monitor

Up to 32 data collected from a Motion module can be displayed in real time.

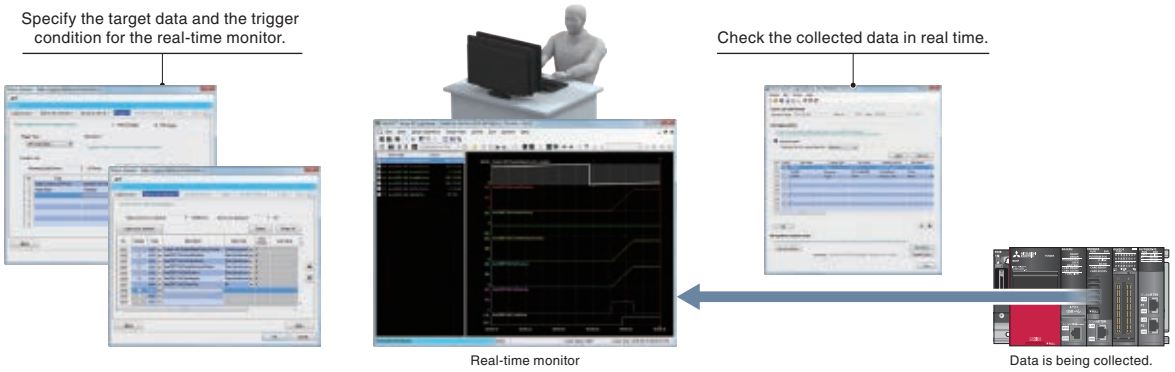

Easy Pre-Verification and Troubleshooting

PLCopen®

System Simulation

The system simulator enables the Motion module and PLC CPU programs to be simulated interactively.
A program operation can be checked without an actual machine during debugging process, which shortens the startup time.

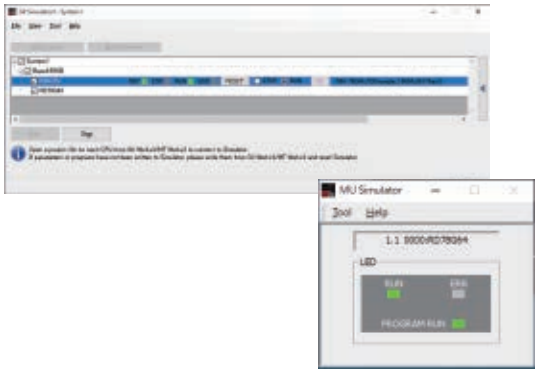

Axis Monitor

Users can customize the axis monitor items according to their machine, improving debug efficiency. The axis monitor can also be used during simulation.

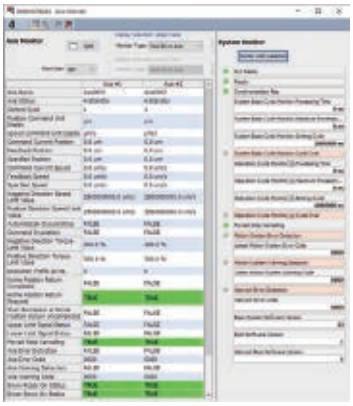

Event History

Event history lists information about executed operations and errors that have occurred on each module in chronological order, which helps to conduct troubleshooting.

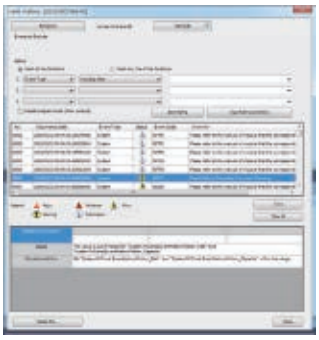

Program Monitor

Debugging can be executed through both the program monitor and the watch window by using the common interface.



ST language program monitor

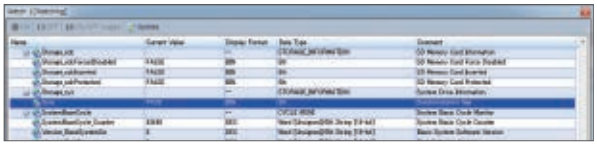

Watch window

Security Key Authentication Function

PLCopen®

The security key authentication prevents programs from being opened on personal computers where the security key has not been registered. Furthermore, because programs can be executed only by Motion modules with the security key registered, the integrity of customer technologies and other intellectual property is not compromised.



Software-based controller for high-precision motion control

CC-Link IE TSN
Motion Control Software

SWM-G



Installed on a personal computer, SWM-G Motion Control Software can perform motion and network control.

- Supports a CC-Link IE TSN servo control system with the personal computer where RTX64 (real-time extension) is installed. (RTX64 is included with SWM-G.)
- Meets various application needs by offering various types of motion control, such as positioning, synchronous, cam, speed, and torque control using API library for motion control.
- Utilizes network control to connect and set various device stations (remote I/O modules, etc.) and TCP/IP devices.

Product Lines

CC-Link IE TSN SWM-G

- Maximum number of control axes: 128
- Minimum operation cycle: 125 µs
- Programming language: Visual C ++®
- USB key (license):
  MR-SWMG16-U: 16 axes
  MR-SWMG32-U: 32 axes
  MR-SWMG64-U: 64 axes
  MR-SWMG128-U: 128 axes

CC-Link IE TSN EtherCAT SWM-G-N1

- Maximum number of control axes: 128
- Minimum operation cycle: 125 µs
- Programming language: Visual C ++®
- USB key (license):
  MR-SWMG16N1-U: 16 axes
  MR-SWMG32N1-U: 32 axes
  MR-SWMG64N1-U: 64 axes
  MR-SWMG128N1-U: 128 axes

Free trial version SWM-G-W

- Maximum number of control axes: 64
- Programming language: Visual C ++®





* A USB key (license) is not required for the free trial version SWM-G-W.

Covering a Wide Range of Multi-Axis Applications

- SWM-G Motion Control Software is available in 16 to 128-axis control models, enabling multi-axis synchronization of various scales of machines.



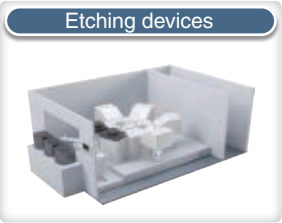

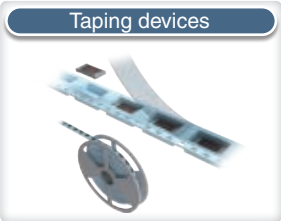

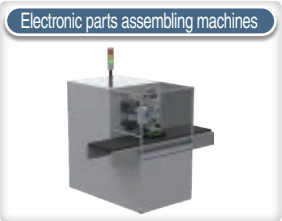

- A CPU core of the industrial personal computer is assigned for running SWM-G processing, and that enables SWM-G to perform a high-speed, real-time operation without being affected by the operation on Windows®.

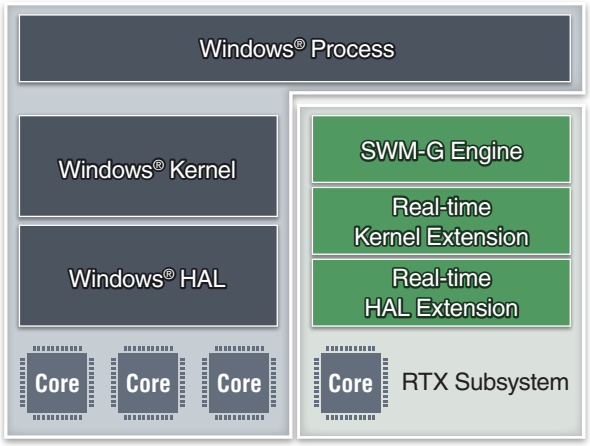

Using the Free Trial Version SWM-G-W without a USB Key (License)

SWM-G-W is a free trial version that can be used for an unlimited period without a USB key (license).
The simulation axis can be operated, and the created programs can be used on SWM-G/SWM-G-N1.
It operates on Windows® and does not occupy CPU cores.

	SWM-G	SWM-G-N1	Free trial version SWM-G-W *1
Content	SWM-G Engine SWM-G API Network API SWM-G Operating Station MotionScope Real Time OS	SWM-G Engine SWM-G API Network API SWM-G Operating Station MotionScope EcConfigurator Real Time OS	SWM-G-W Engine SWM-G API SWM-G-W Operating Station TRIAL MotionScope
USB key (license)	Required	Required	Not required
RTX	Included	Included	–
Maximum number of control axes	128 axes	128 axes	64 axes
Servo amplifier	MR-J5-G	MR-J5-G(-N1)	–
Simulation axis	Included	Included	Included

*1. SWM-G-W functions and API have restrictions. Refer to "Motion Control Software SWM-G-W Manual" for details.

Motion Control with Simulation Axes

Programs can be checked with simulation axes.
This enables a program check without servo amplifiers from the debugging stage, shortening the startup time.

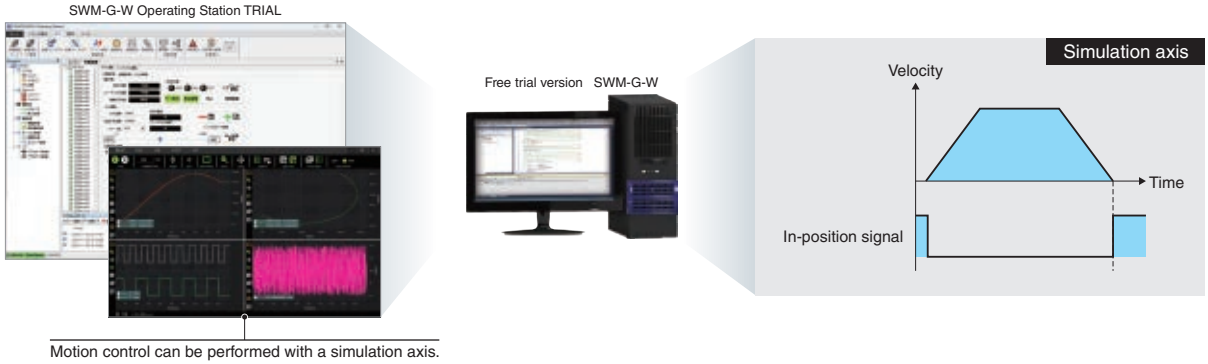

System Configuration

SWM-G Motion Control Software executes motion control while functioning as a master station of CC-Link IE TSN. *1
This feature enables users to create a system more flexibly by connecting various devices, such as servo amplifiers, remote I/O modules, and TCP/IP devices, to SWM-G.
High-speed control is achieved even when control at low- and high-speed communication cycles is mixed within the same control communication.

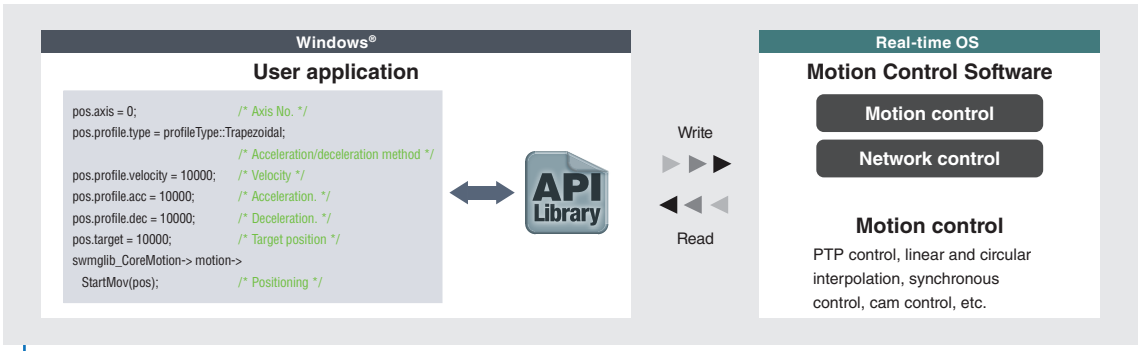

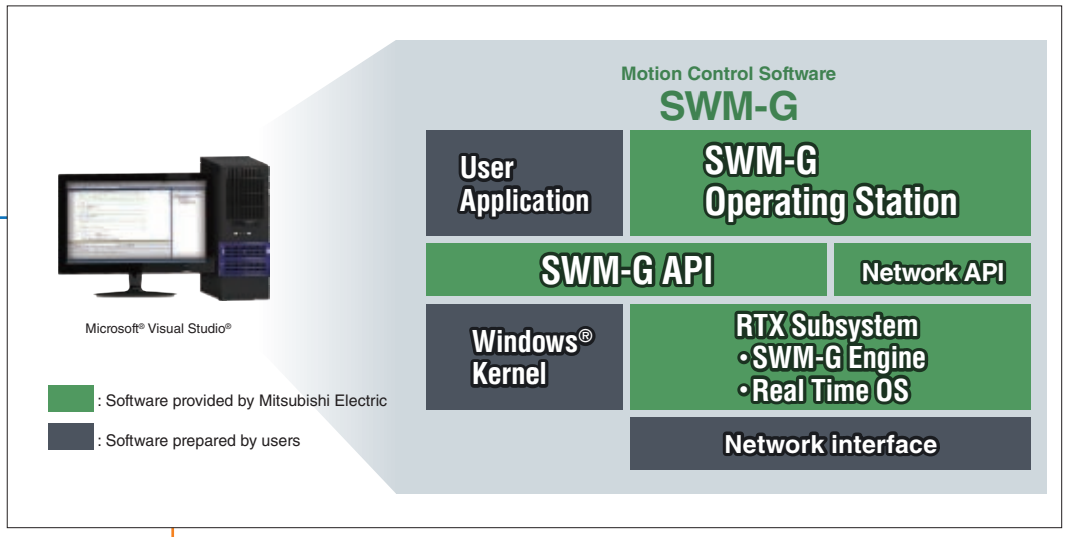

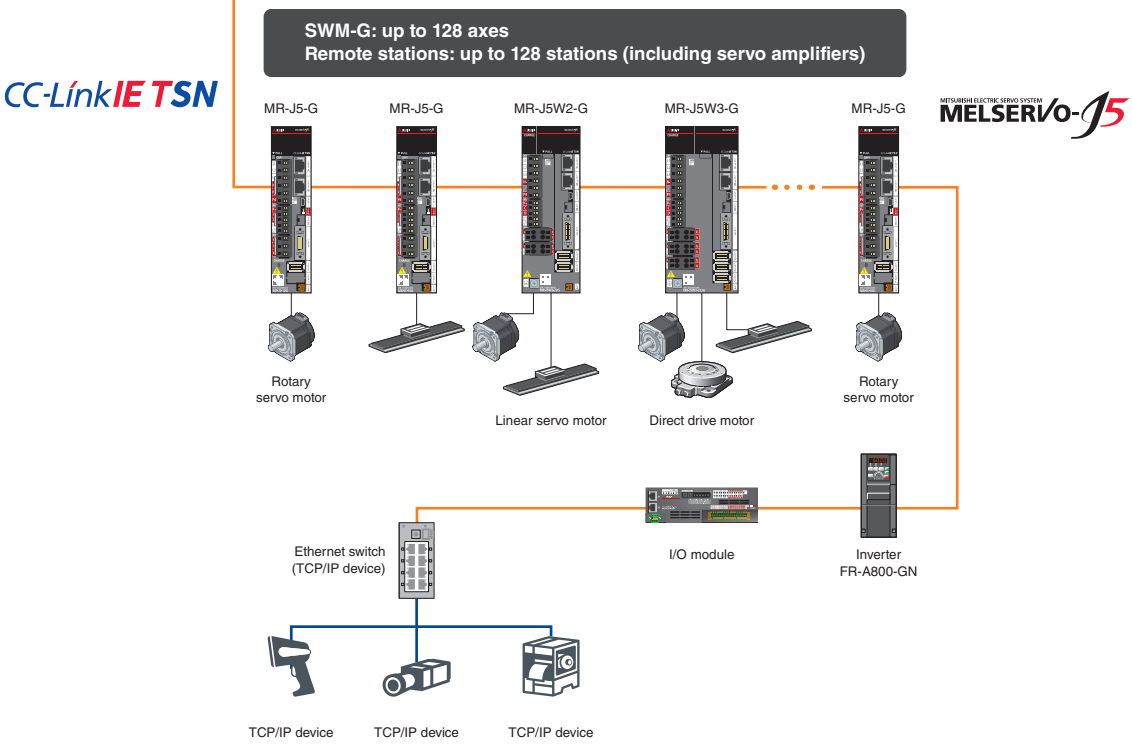

*1. The following functions are not provided: sub-master station, local station, multi-master configuration, backup/restore function, data communication function with standard stations, and safety communication.

Integrated Test Tool SWM-G Operating Station

This tool provides a variety of features - parameter settings required for application development and the test operation for JOG, inching, and positioning operations. In addition, each axis status and sampled waveforms can be displayed to help user check the start timing and the operation pattern.

SWM-G Operating Station

[Communication monitor]

- Displays a list of the master communication setting
- Displays the system status, allowing users to check communication status

[Single-axis control]

- Performs a test operation for single-axis control
- Performs a reciprocating operation that is often used for a test operation

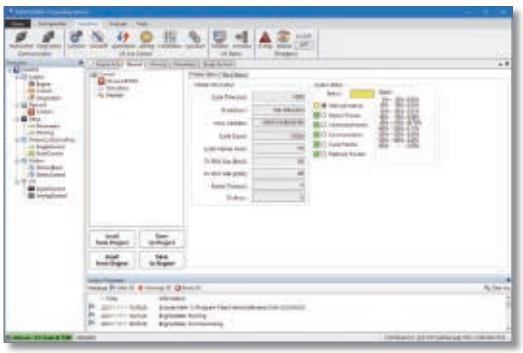



Multiple Servo Amplifier Settings and Adjustments

MR Configurator2 enables users to easily set and adjust multiple servo amplifiers through CC-Link IE TSN which enables mixing of TCP/IP communication and other communications.
Using MR Configurator2 with the integrated test tool, users can adjust servo amplifiers while checking the servo amplifier communication status.

- Supports MR-J5-G
- Manages a multi-axis system as one project
- Parameters and the machine diagnosis can be set for all axes in a batch on MR Configurator2.

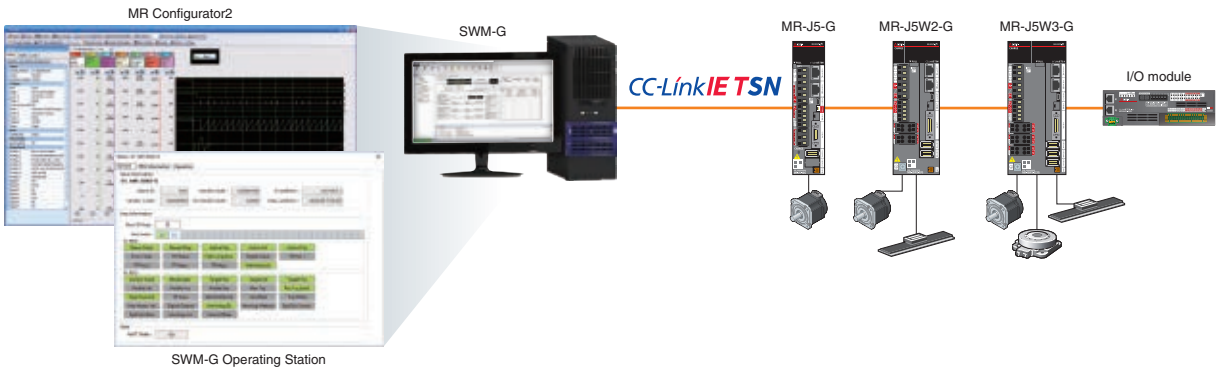

*MR Configurator2 is not included with SWM-G Motion Control Software.

Positioning Control

Linear interpolation

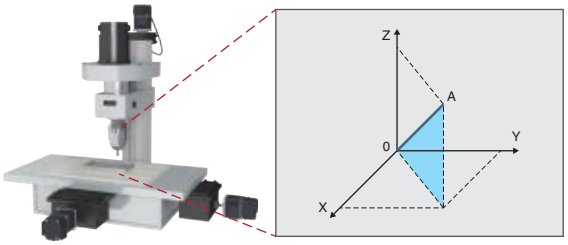

Circular interpolation

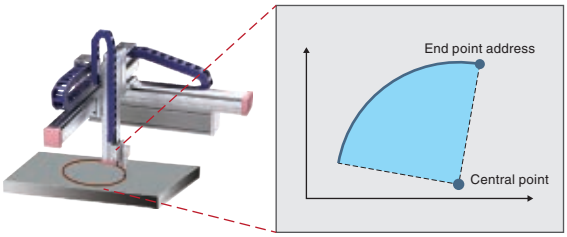

Continuous path control (path interpolation)

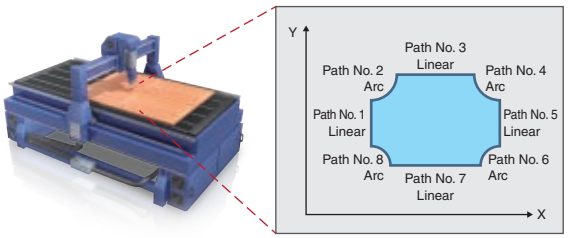

Helical interpolation

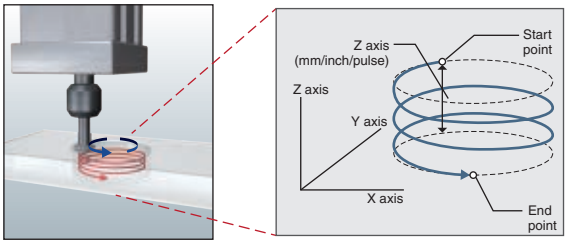

Jerk acceleration/deceleration

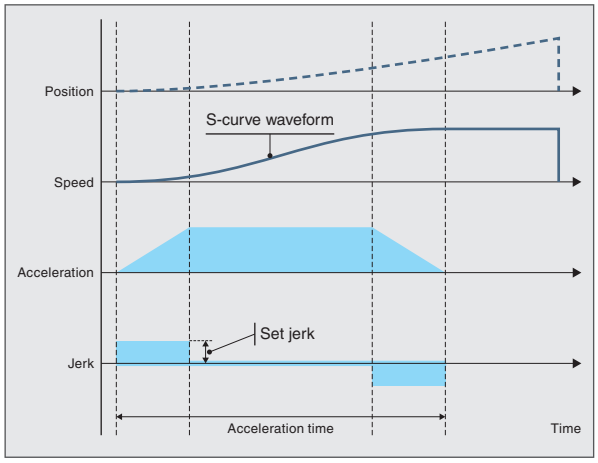

In this method, an axis can be accelerated gradually through adjusting jerk so that the vibrations of the machine can be minimized.
In the example above, the constant positive jerk is applied at the start of the operation to achieve smooth acceleration. When the axis is shifted to the constant-speed operation, the same amount of negative jerk is applied.
Adjusting jerk in this way achieves smooth acceleration/deceleration while also shortening the time it takes to reach the target speed.
The speed creates a S-curve shape.

Triggered motion

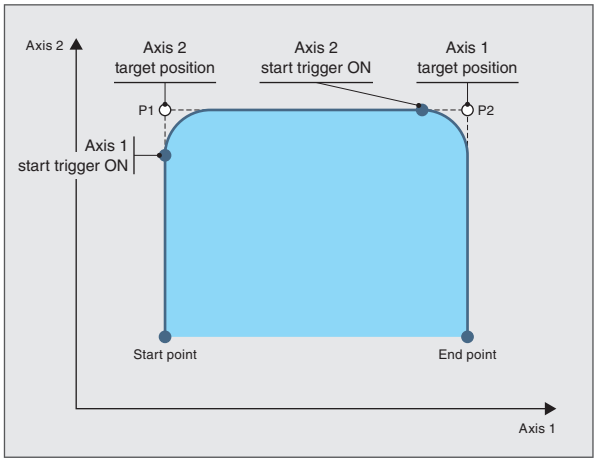

The triggered motion is a type of command that delays the execution of the motion command until the specified trigger condition is satisfied.
Axes can be started automatically based on the specified conditions by using this command, reducing the cycle time of conveyor systems, etc.
In the operation example above, right after the axis 2 starts execution of normal motion commands, the axis 1 executes the triggered motion command (delaying the execution of the command until the condition is satisfied).
When the condition is satisfied (start trigger ON) during the axis 2 operation, the axis 1 starts executing the motion command.

Synchronous control (tandem drive)

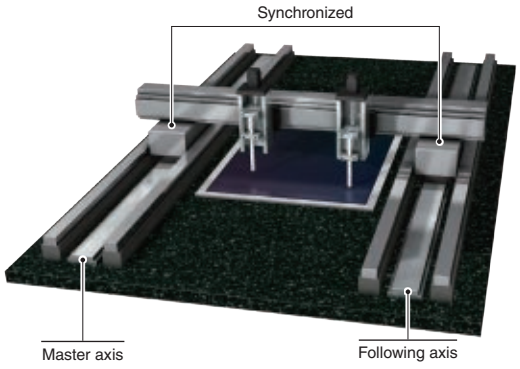

Motion Control Software enables tandem operation where the same commands can be outputted to master and following axes.

Gantry home position return

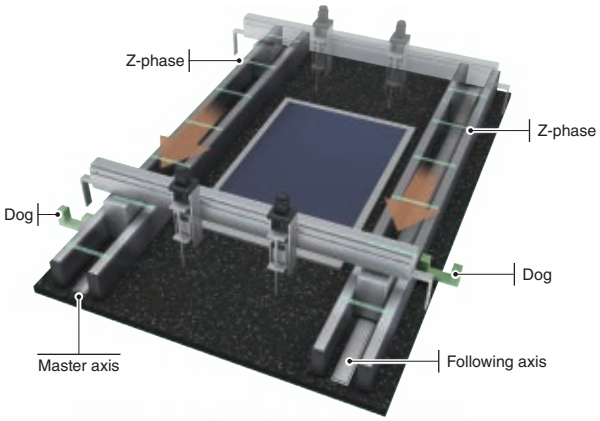

After the master and following axes pass their respective dogs, the gantry home position return stops both of the axes at the Z-phase of the master axis.
This method enables two or more axes to execute home position return simultaneously, supporting gantry systems.

A Wide Variety of Features

Hot connect (disconnection/reconnection)

The hot connect enables a topology change during operation without requesting a communication stop.
The user application disconnects and reconnects the network through API library.

Monitoring of servo data

The controller obtains the status data of servo amplifiers, such as machine diagnosis information and encoder temperature, via CC-Link IE TSN. This enables visualization of machine status.

Position synchronous output (cam switch)

The output signal is turned on when a specified condition is satisfied. This function can be used as an alternative to a limit switch.

Touch probe (mark detection)

The current value of the servo motor can be read when the touch probe signal is inputted.
Software and hardware touch probes are available.
Select the touch probe according to your application.

Pitch error compensation

The set offset is applied at regularly spaced command positions. The position error of ball screws can be compensated, improving the operation accuracy.

Backlash compensation

The set offset is applied when the axis changes the travel direction.
The backlash of ball screws can be compensated, which improves operation accuracy of machines.

Acceleration/deceleration methods

The controller offers 24 types of acceleration/deceleration methods, such as trapezoidal, S-curve, jerk ratio, parabolic, sine curve, time acceleration trapezoidal, etc.
Select the method according to your application.

Programming Utilizing API Library

SWM-G

■ Development environment *1 (Microsoft® Visual Studio®)

Add the SWM-G API library to the project of Microsoft® Visual Studio® and create a user program.

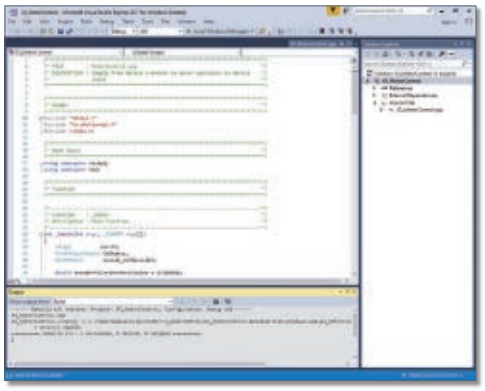

- C++, C# compile
- Debug of C language programs

*1. Prepare a development environment with Microsoft® Visual Studio®.

■ A program that starts positioning

User program

```
void sample()
{
   Motion::PosCommand pos;

   /* Position command data settings */
   pos.axis = 0;                              /* Axis = axis 0 */
   pos.profile.type = ProfileType::Trapezoidal;       /* Acceleration = trapezoidal */
   pos.profile.velocity = 10000.0;            /* Velocity = 10000.0 [U/s] */
   pos.profile.acc = 10000.0;                         /* Acceleration = 10000.0 [U/s^2] */
   pos.profile.dec = 10000.0;                         /* Deceleration = 10000.0 [U/s^2] */
   pos.target = 30000.0;                      /* Travel distance = 30000.0 [U] */

   /* Relative positioning start */
   err = ssclib_cm.motion->StartMov(&pos);
   if (err != ErrorCode::None) { /* Error processing */ }

   /* Waiting for positioning completion */
   sscLib_cm.motion->Wait(0);
}
```

Servo amplifier

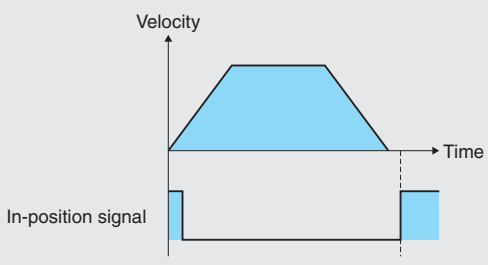



■ A program that continuously starts positioning of another axis based on the specified trigger condition

User program

```
void sample()
{
   Motion::PosCommand pos;
   Motion::TriggerPosCommand tpos;

   /* Position command data settings (axis 0) */
   pos.axis = 0;                              /* Axis = axis 0 */
   pos.profile.type = ProfileType::Trapezoidal;       /* Acceleration = trapezoidal */
   pos.profile.velocity = 10000.0;            /* Velocity = 10000.0 [U/s] */
   pos.profile.acc = 10000.0;                         /* Acceleration = 10000.0 [U/s^2] */
   pos.profile.dec = 10000.0;                         /* Deceleration = 10000.0 [U/s^2] */
   pos.target = 30000.0;                      /* Travel distance = 30000.0 [U] */

   /* Relative positioning start (axis 0) */
   err = ssclib_cm.motion->StartMov(&pos);
   if (err != ErrorCode::None) { /* Error processing */ }

   /* Triggered motion position command data settings (axis 1) */
   tpos.axis = 1;                             /* Axis = axis 1 */
   tpos.profile.type = ProfileType::Trapezoidal;      /* Acceleration = trapezoidal */
   tpos.profile.velocity = 10000.0;           /* Velocity = 10000.0 [U/s] */
   tpos.profile.acc = 10000.0;                        /* Acceleration = 10000.0 [U/s^2] */
   tpos.profile.dec = 10000.0;                        /* Deceleration = 10000.0 [U/s^2] */
   tpos.target = 20000.0;                     /* Travel distance = 20000.0 [U] */
   tpos.trigger.triggerAxis = 0;              /* Trigger axis = axis 0 */
   tpos.trigger.triggerType = TriggerType::RemainingDistance;    /* Trigger condition = remaining distance */
   tpos.trigger.triggerValue = 1500.0;        /* Remaining distance = 1500.0 [U] */

   /* Triggered motion relative positioning start (axis 1) */
   err = ssclib_cm.motion->StartMov(&tpos);
   if (err != ErrorCode::None) { /* Error processing */ }

   /* Waiting for positioning completion */
   sscLib_cm.motion->Wait(1);
}
```

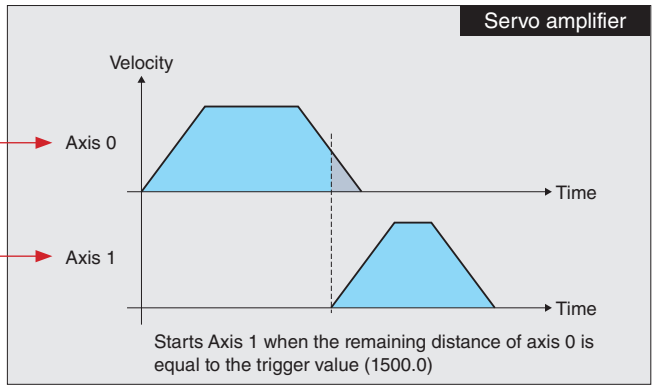



High-speed, high-precision motion control in an industrial personal computer environment

CC-Link IE TSN
Motion Control Board NEW

MR-EM441G



Motion control board MR-EM441G is a personal computer embedded type servo system controller for controlling servo amplifier MR-J5-G. Connected to the PCI Express® extended slot of an industrial personal computer, MR-EM441G realizes fast and accurate motion control.

Product Lines

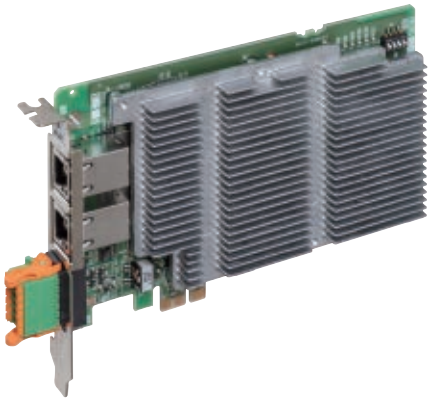

CC-Link IE TSN
Motion Control Board

MR-EM441G

Maximum number of control axes: 64 axes
Minimum operation cycle*1: 62.5 [µs]*2
Program: Visual C++®/C#®

- Drives the servo amplifier with high-speed motion control at 62.5 µs/4 axes*3 and 250 µs/60 axes*4.
- Line and star connections are supported, realizing flexibility in topology and reducing wiring cost.
- An event-driven user application, which uses interrupts generated from MR-EM441G to the industrial PC, can be configured.

*1. The minimum operation cycle varies by the number of control axes.
*2. When the operation cycle is 62.5 µs, some functions are not available.
*3. When executing a trapezoidal command for all axes in the high-speed operation mode.
*4. When connecting only MR-J5W_-G and executing a trapezoidal command for all axes in the high-speed operation mode.

High-Speed, High-Precision Motion Control

62.5 µs/4-axis control *1, 2

MR-EM441G enables 4-axis control with a minimum operation cycle of 62.5 µs.
Optimum for high-speed processing of the head part.

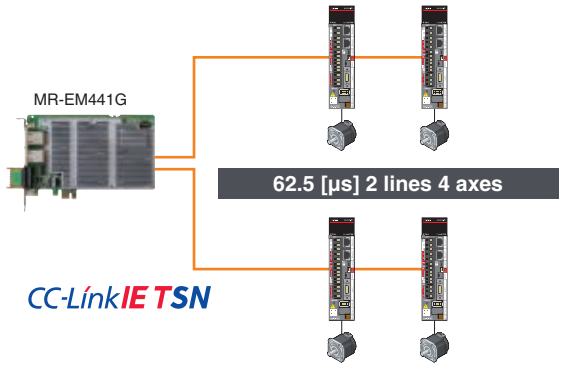

*1. When executing a trapezoidal command for all axes in the high-speed operation mode.
*2. When the operation cycle is 62.5 µs, some functions are not available.

250 µs/60-axis control *3

MR-EM441G enables 60-axis control with a minimum operation cycle of 250 µs.
Cycle time is shortened even for multi-axis equipment.

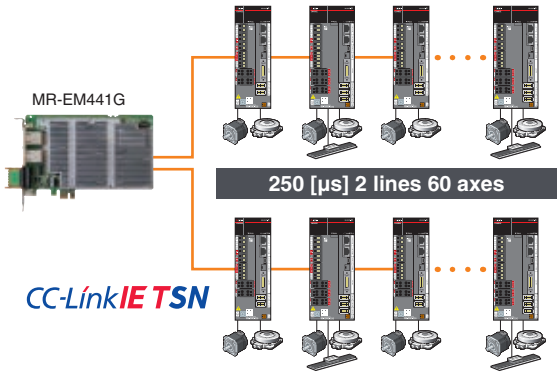

*3. When connecting only MR-J5W_-G and executing a trapezoidal command for all axes in the high-speed operation mode.

Load Distribution with a PC and a Motion Control Board

MR-EM441G has a built-in high-performance CPU and performs complicated and high-speed motion control.
Therefore, even when the CPU of the PC is heavily loaded with a huge amount of data processing, the motor operation of MR-EM441G will not be affected, achieving high-speed and high-precision positioning.



Application Examples

[Mounters]

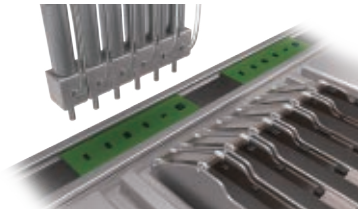

[Electronic parts manufacturing systems]



[Semiconductor manufacturing systems]



[Chemical mechanical polishing devices]

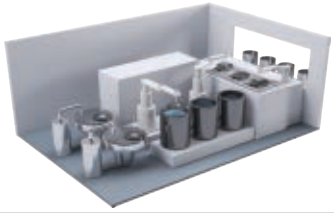

[Etching devices]

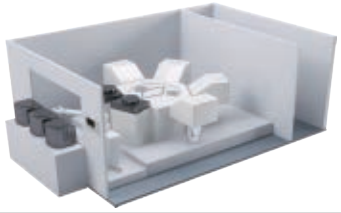

[Electronic parts assembling machines]

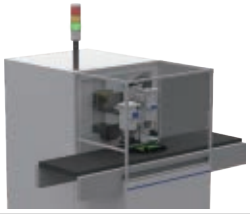

System Configuration

MR-EM441G can function as a master station of CC-Link IE TSN.*1
This feature enables users to create a system more flexibly by connecting various devices, such as servo amplifiers and remote I/O modules.

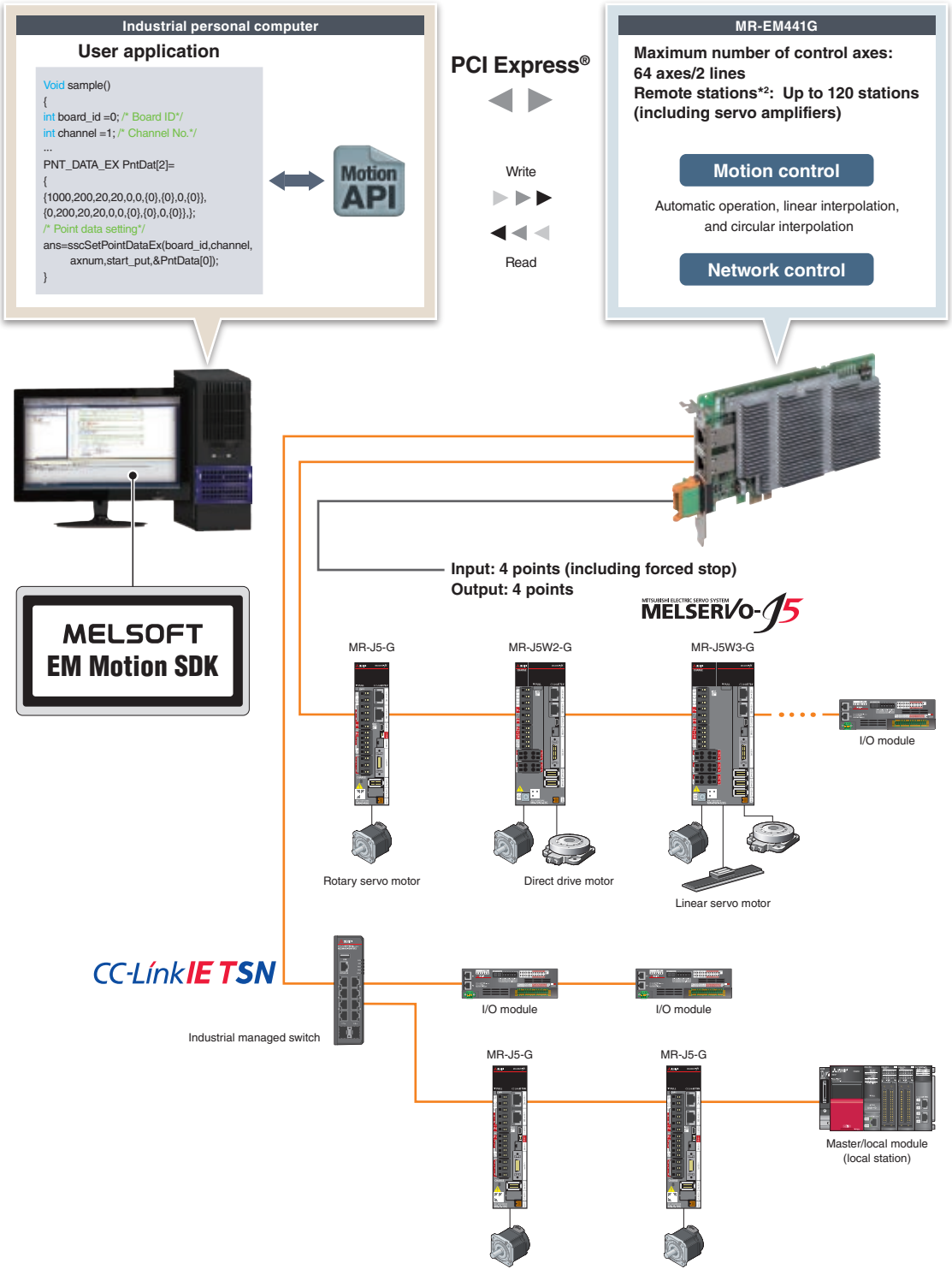

*1. The following functions are not supported: sub-master station and safety communication.
*2. CC-Link IE TSN Class A devices cannot be connected.

Development Environment MELSOFT EM Motion SDK

MELSOFT EM Motion SDK is a software development kit that supports Motion control boards from parameter settings, debug, to maintenance.

● To create an application*1, use a motion API running on Windows®.

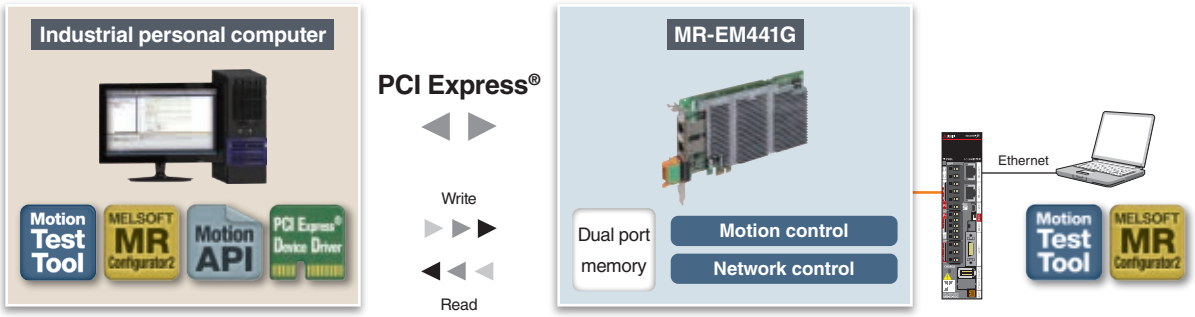

MELSOFT EM Motion SDK		
Motion Test Tool	Motion test tool	The operation of MR-EM441G and the status of the connected devices can be checked regardless of the user application.
Motion API	Motion API	Motion API provides easy access to MR-EM441G.
PCI Express® Device Driver	Motion control board device driver	This software provides access to MR-EM441 via PCI Express® from a user application.
MELSOFT MR Configurator2	MR Configurator2	Servo adjustment, monitoring, diagnosis, etc. are easily performed.

*1. OS and the development environment are not included and must be prepared by the user.

Positioning Control

Positioning data such as speed and travel distance is set to each point, and positioning control is executed from the start point No. to the end point No.
Use the motion API for setting the point data and starting operations.
In the high-speed operation mode, there are restrictions on the combinations of the linear interpolation group, circular interpolation group, and tandem operation group.

Automatic operation

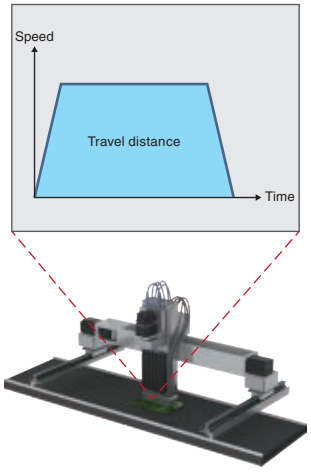

Linear interpolation

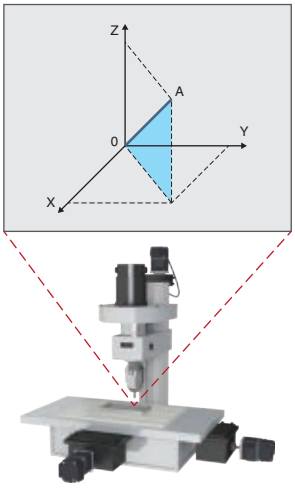

Circular interpolation

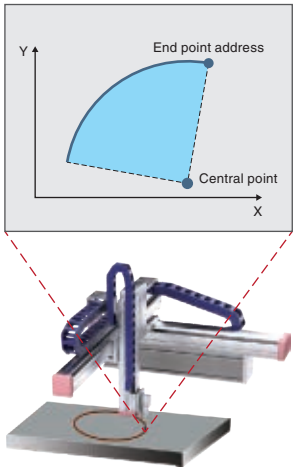

Jerk ratio acceleration/deceleration

Vibration is suppressed with smooth speed changes

Set a section where acceleration rate changes smoothly and a section where the maximum acceleration rate is maintained. This reduces the total acceleration time without losing smoothness.

Section A: Acceleration rate changes smoothly
Section B: The maximum acceleration rate is maintained
Section C: Acceleration rate changes smoothly
Section D: Constant speed

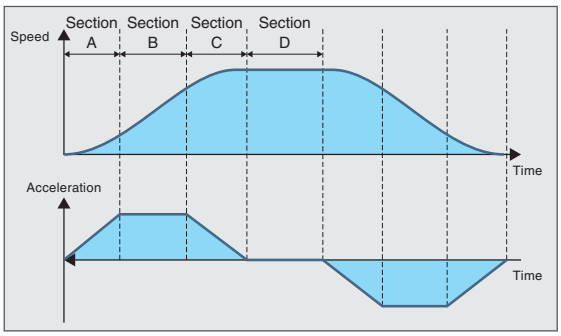

Other axes start

Less cycle time with internal operation start

Other axes start is a function that is started by MR-EM441G internally, not by a user application.
Operation of other axes can be started at a specified position of the self axis, reducing cycle time.
Startup conditions of other axes and their operation patterns must be set in advance.
Output signals can also be turned ON or OFF based on the other axes start condition.

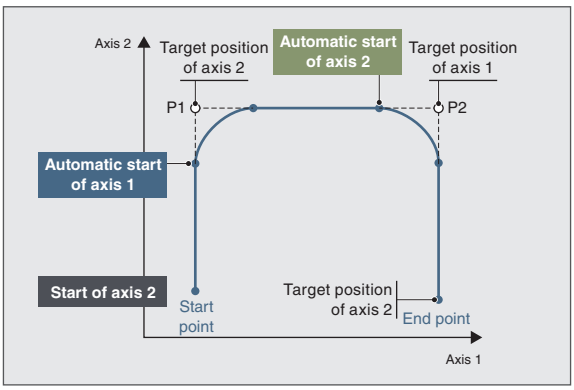

Start of axis 2	Operation start with user application
Automatic start of axis 1	Operation start with other axes start
Automatic start of axis 2	Operation start with other axes start

Pressure control

Pressure control is performed so that the pressure command and the pressure sensor value are matched, enabling the pressure to be kept constant even while the load is changing.
Combined with an MR-J5-G-LL pressure control compatible servo amplifier, MR-EM441G can perform feed, dwell, and pressure release operations, achieving advanced pressure control.
Up to 16 axes can execute pressure control simultaneously.

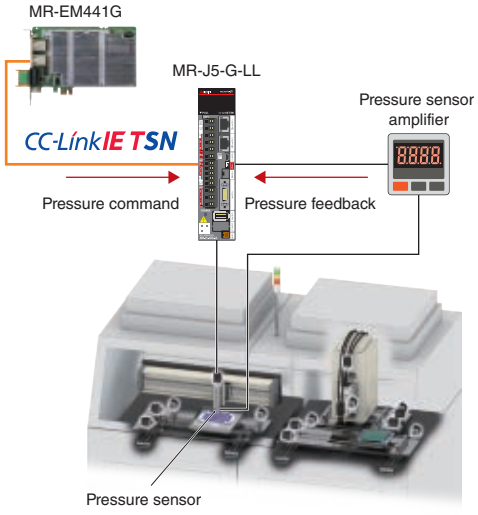

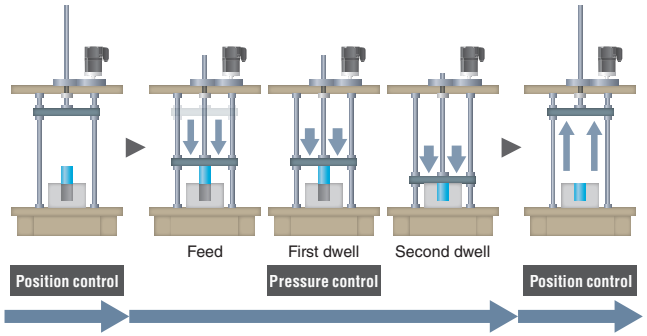



The pressure command can be easily set and adjusted with motion test tool.

Tandem operation

Tandem operation is a function that controls two axes (master axis and following axis) set in the tandem operation group to perform the exact same positioning operation.
It is used when two mechanically coupled motors drive a single machine, such as gantry systems.
Point data settings and operation start are performed on the master axis.

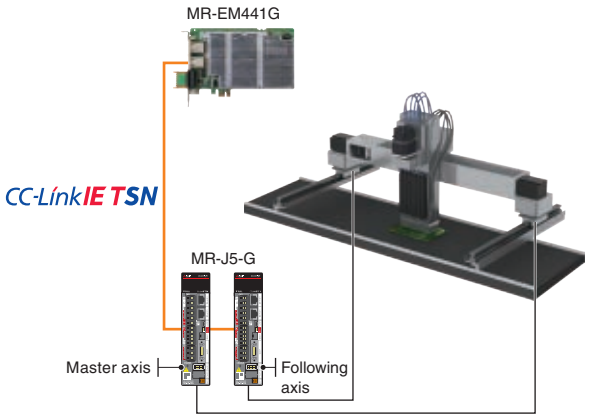

Continuous operation to torque control

The axes are controlled to run at the constant torque by following the torque command while the current position is being tracked.
The position control can be switched smoothly to the torque control without stopping the servo motor.

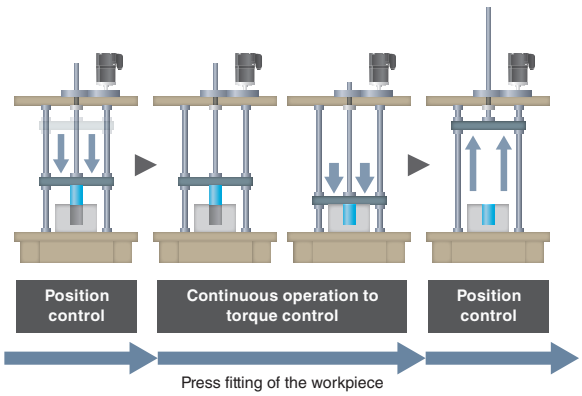

Reach new limits while inheriting existing assets.
Maximize the performance of your system with MELSERVO-J5 total drive solutions.

Progressiveness

CC-Link IE TSN-Compatible Servo Amplifiers MR-J5-G

MR-J5-G/MR-J5W_-G/MR-J5D_-G4 servo amplifiers can connect to CC-Link IE TSN to perform high-speed, high precision control.
The performance and the functions have been greatly improved, contributing to innovative evolution of the machines.

CC-Link IE TSN
Servo amplifiers

MELSERVO-J5

MR-J5-G(4)
MR-J5W_-G
MR-J5D_-G4



Minimum communication cycle *1
31.25 µs

Functional safety via network

Servo system recorder

Features of CC-Link IE TSN-Compatible Servo Amplifiers

- Features the minimum communication cycle of 31.25 µs to perform high-speed, high-precision control
- Allows both control communication and information communication on one network and thus enables a flexible system
- Sends and receives large amounts of data, such as recipe data with a high-speed, large-capacity 1 Gbps communications network

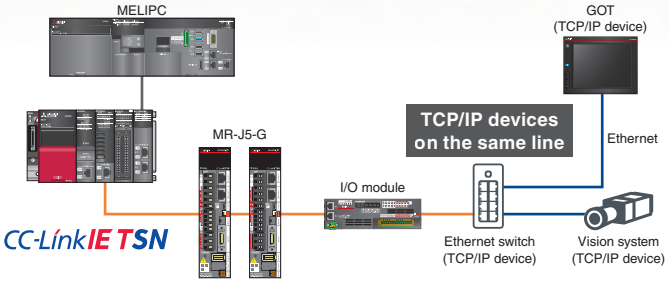

Speed frequency response	Minimum communication cycle *1	Encoder
3.5 kHz	31.25 µs	Batteryless absolute position encoder

*1. MR-J5-G/MR-J5D1-G4 support 31.25 µs.

- Features safety communications via CC-Link IE TSN

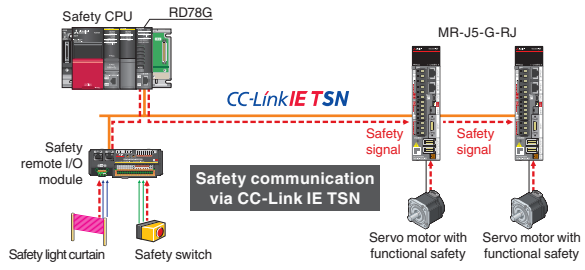

- MELSEC iQ-R series Motion modules collect data of servo amplifiers when an error occurs

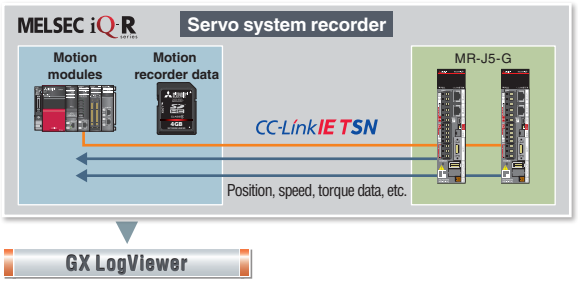

Compatible Servo System Controllers



MELSEC iQ-R series
Motion module
RD78GH
RD78G



MELSEC iQ-F series
Motion module
FX5-SSC-G

Personal computer embedded type servo system controller Motion Control Software
SWM-G(-N1)



Personal computer embedded type servo system controller Motion control board
MR-EM441G NEW

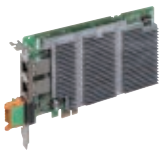

Heritage

SSCNET III/H-Compatible Servo Amplifiers MR-J5-B

MR-J5-B/MR-J5W_-B servo amplifiers can connect to SSCNET III/H and utilizes the existing program assets to improve the performance of the machines.
Transition from MELSERVO-J4 series to MELSERVO-J5 is supported.

SSCNET III/H
SERVO SYSTEM CONTROLLER NETWORK

Servo amplifiers

MELSERVO-J5

MR-J5-B(4)
MR-J5W_-B



Utilizing existing program assets

Optical communication

Servo system recorder

Features of SSCNET III/H-Compatible Servo Amplifiers

- Allows the user to build a MELSERVO-J5 series servo system that utilizes the existing assets of Motion controllers and Simple Motion modules
- Enables function improvement of the machines by combining MR-J5-B servo amplifiers and HK series rotary servo motors

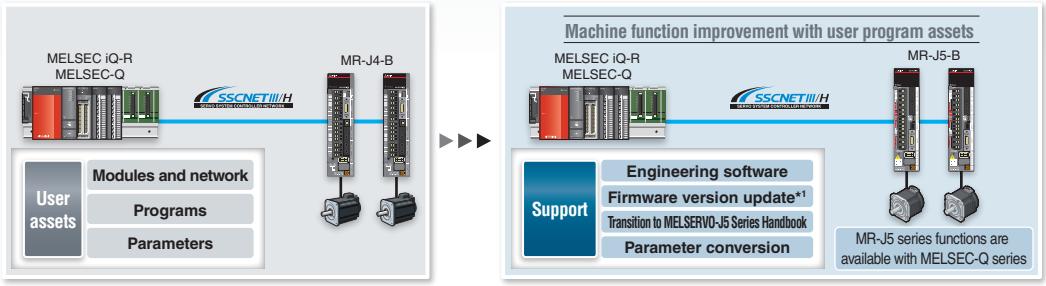

*1. The Motion controller with the updated firmware supports MR-J5-B.

Speed frequency response
3.5 kHz

Encoder
Batteryless absolute position encoder

- Changing the servo amplifier setting from MR-J4-B to MR-J5-B converts the parameters

Engineering software
MELSOFT MT Work2
MELSOFT GX Work3/GX Work2

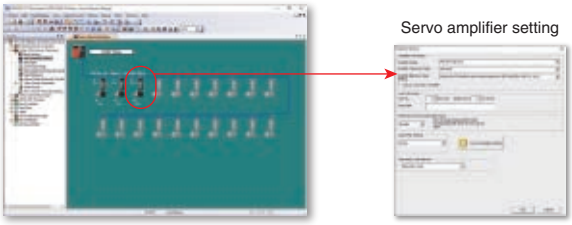

- MELSEC iQ-R series Motion controllers collect data of servo amplifiers when an error occurs

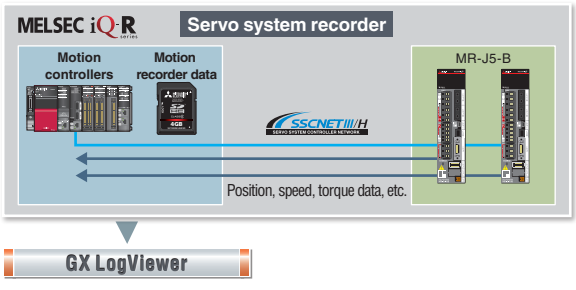

Compatible Servo System Controllers



MELSEC iQ-R series

Motion controller
RnMTCPU

Simple Motion module
RD77MS



MELSEC Q series

Motion controller
Q17nDSCPU
Q170MSCPU

Simple Motion module
QD77MS

Personal computer embedded type servo system controller
Position Board
MR-MC341



Driving a wider range of motors with more flexible options

Servo amplifiers

MITSUBISHI ELECTRIC SERVO SYSTEM
MELSERVO-J5

Designed for an ambient temperature of up to 60 ˚C.



Replaceable cooling fan

Enhanced visibility

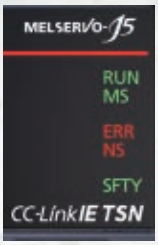

Input and output are distinguished by color.

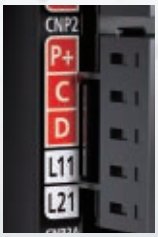

CC-Link IE TSN



MR-J5-G(4)

Supports Ethernet-based CC-Link IE TSN, featuring high-speed, large-capacity communication (1 Gbps). Communication cycle of ≥ 31.25 µs and speed frequency response of 3.5 kHz enable advanced motion control.



MR-J5W_-G

Drives a maximum of two/three servo motors. This simplifies wiring, saves energy, and enables a compact machine.



MR-J5D_-G4

The drive unit is a converter separate type servo amplifier (1/2/3-axis type available). Combined with an MR-CV_4 power regeneration converter unit, the drive unit can create an energy-saving servo system.

Product Lines

Servo amplifier

●: Supported ○: Future support planned –: Not supported

Model	Power supply specifications (Note 1)	Command interface (Note 4)	Fully closed loop control (Note 2)	Compatible servo motors			
				Rotary	Linear (Note 3)	Direct drive	
MR-J5-G	200 V AC	CC-Link IE TSN EtherCAT® (Note 5) EtherNet/IP® (Note 6)	●	●	●	●	
	400 V AC		●	●	○	–	
MR-J5W2-G	200 V AC		●	●	●	●	
MR-J5W3-G			–	●	●	●	
MR-J5D1-G4	400 V AC		●	●	–	–	
MR-J5D2-G4			●	●	–	–	
MR-J5D3-G4			–	●	–	–	
MR-J5-B	200 V AC	SSCNET III/H	●	●	●	●	
	400 V AC		●	●	○	–	
MR-J5W2-B	200 V AC		●	●	●	●	
MR-J5W3-B			–	●	●	●	
MR-J5-A	200 V AC	Pulse train/Analog voltage	●	●	●	●	
	400 V AC		●	●	○	–	

Notes: 1. 200 V AC servo amplifiers are also compatible with DC power supply input as standard.
2. The indicated servo amplifiers are compatible with a two-wire type serial encoder. For four-wire type serial encoders and pulse train interface (A/B/Z-phase differential output type) encoders, use MR-J5-G-HS/MR-J5-G-RJ/MR-J5D1-G4/MR-J5-B-RJ/MR-J5-A-RJ servo amplifiers.
3. The indicated servo amplifiers are compatible only with two-wire type and four-wire type serial linear encoders. For a pulse train interface (A/B/Z-phase differential output type) linear encoder, use MR-J5-G-HS/MR-J5-G-RJ/MR-J5-B-RJ/MR-J5-A-RJ servo amplifiers.
4. MR-J5-G/MR-J5D1-G4 are also compatible with CC-Link IE Field Network Basic.
5. EtherCAT® is supported by MR-J5-G-N1/MR-J5-G-HSN1/MR-J5-G-RJN1/MR-J5W_-G-N1/MR-J5D_-G4-N1.
6. EtherNet/IP® is supported by MR-J5-G-HSN1/MR-J5-G-RJN1/MR-J5W_-G-N1/MR-J5D_-G4-N1.

Drive unit



Width: 60 mm *1

Standard models support functional safety.

Drives one axis.

Drives two axes.

Drives three axes.

*1. Some of the 1-axis models have a width of 75 mm.

SSCNET III/H
SERVO SYSTEM CONTROLLER NETWORK



MR-J5-B(4)
MR-J5W_-B

Supports optical network SSCNET III/H.
Communication cycle of ≥ 0.222 ms and speed frequency response of 3.5 kHz enable advanced motion control.

Multi-network

EtherCAT® EtherNet/IP® ODVA



MR-J5-G(4)-N1
MR-J5W_-G-N1
MR-J5D_-G4-N1

Supports EtherCAT® and EtherNet/IP®.
Configures a high-performance and high-functionality system.

General purpose interface



MR-J5-A(4)

Enables position control by pulse train command and speed/torque control by analog voltage command.
The maximum command pulse frequency is 4 Mpulses/s.

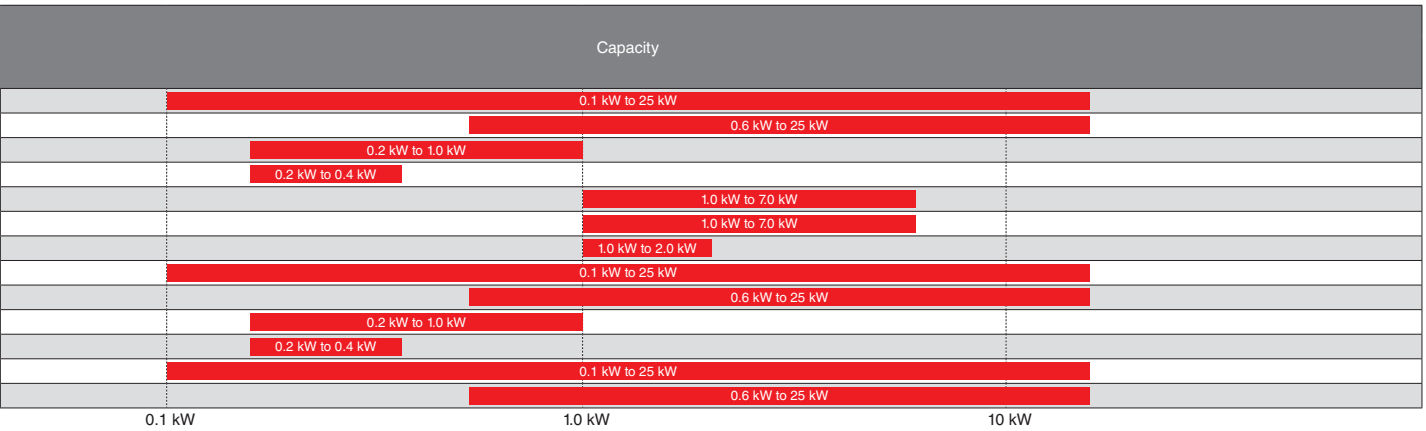

Tuning Functions

Use the tuning methods that are optimal for your machines.

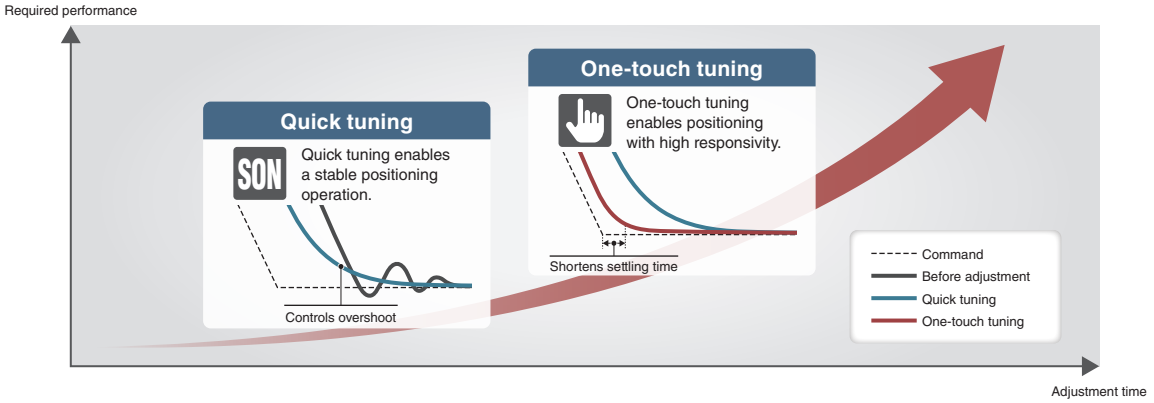

Quick Tuning

This function automatically performs easy-to-use auto tuning that controls vibration and overshoot just by turning on the servo-on command. Before normal operation, the servo amplifier sets control gain and machine resonance suppression filters in 0.3 seconds by inputting torque to the servo motor automatically. After completing the setting, the servo amplifier starts operation normally.

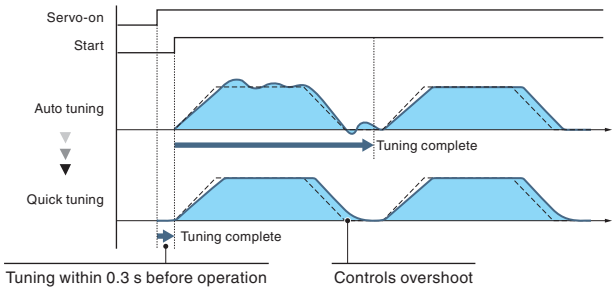

One-Touch Tuning

This function automatically completes servo gain adjustment according to the mechanical characteristics and reduces the settling time just by turning on the one-touch tuning. The servo gain adjustment includes the machine resonance suppression filter, advanced vibration suppression control II, and the robust filter. Controlling overshoot and vibration is improved, maximizing your machine performance.

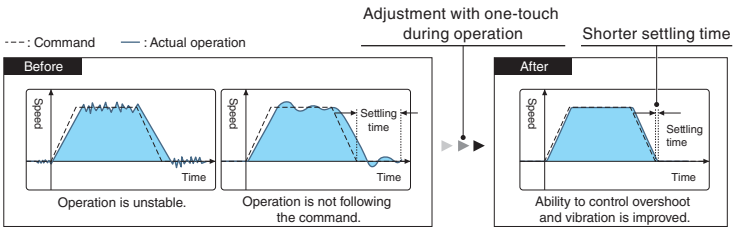

Advanced Vibration Suppression Control II

This function suppresses two types of low frequency vibrations, owing to vibration suppression algorithm which supports three-inertia system. This function is effective in suppressing residual vibration with relatively low frequency of approximately 100 Hz or less generated at the end of an arm and in a machine, enabling a shorter settling time. Adjustment is easily performed on MR Configurator2.

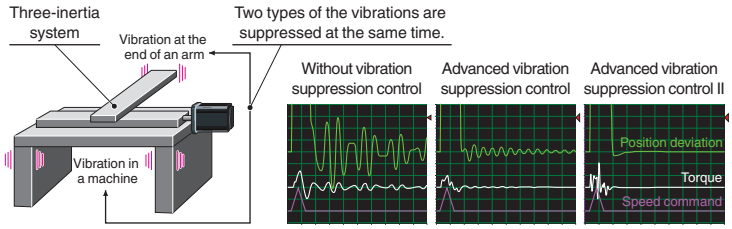

Command Notch Filter

The frequency can be set close to the machine vibration frequency because the command notch filter has an applicable frequency range between approximately 1 Hz and 2000 Hz.

Machine Resonance Suppression Filter

The expanded applicable frequency range is between 10 Hz and 8000 Hz. Five filters are simultaneously applicable, improving vibration suppression performance of a machine. The machine resonance frequency is detected by the machine analyzer function in MR Configurator2.

Energy/Space Saving and Simple Wiring (200 V)

Simple Converter MR-CM

The MR-CM simple converter saves energy by efficiently using regenerative power through a common bus connection and reduces the number of molded-case circuit breakers and magnet contactors, resulting in space-saving and simple wiring. The simple converter can connect to up to six compatible servo amplifiers having a total capacity of 3 kW or lower.
Using daisy connectors for passing wiring simplifies the wiring for the bus and the control circuit power supply.

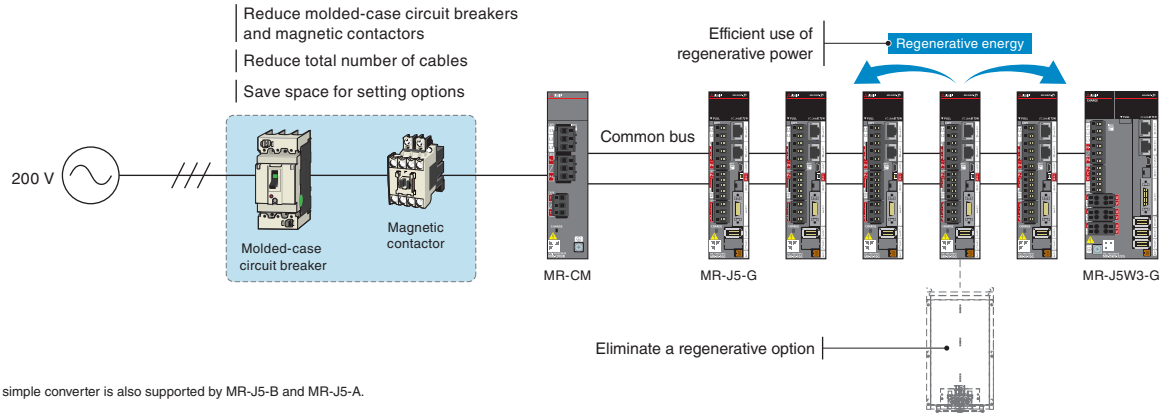

* The simple converter is also supported by MR-J5-B and MR-J5-A.

Application Examples

[Vertical form, fill & seal]
The simple converter uses regenerative energy of the packing film unwinding axis for other axes such as conveying rollers.

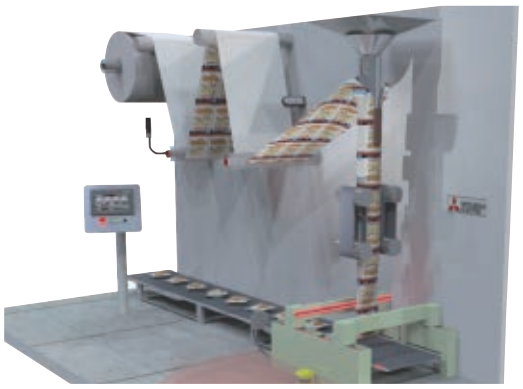

[Wafer prober]
The simple converter saves installation space for semiconductor manufacturing equipment in a clean room.

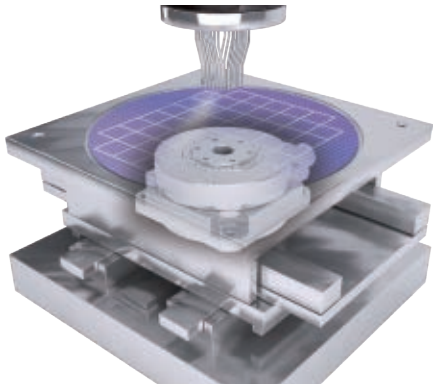

Multi-Axis Servo Amplifiers

The 2-axis and 3-axis servo amplifiers are available for operating two and three servo motors, respectively. These servo amplifiers enable an energy-saving and compact machine.
Different types of servo motors including rotary servo motors, linear servo motors, and direct drive motors are freely combined as long as the servo motors are compatible with the servo amplifier.

[2-axis servo amplifier]
CC-Link IE TSN-compatible: MR-J5W2-G
SSCNET III/H-compatible: MR-J5W2-B
[3-axis servo amplifier]
CC-Link IE TSN-compatible: MR-J5W3-G
SSCNET III/H-compatible: MR-J5W3-B

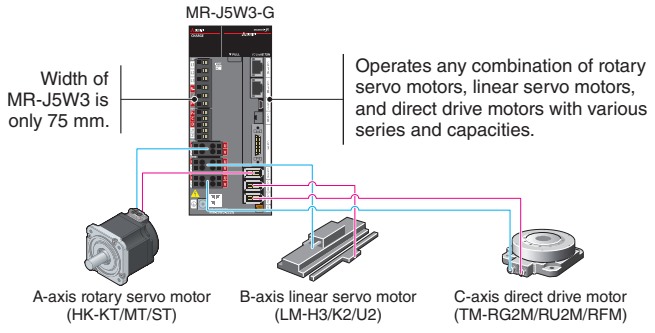

Converter Separate Type 400 V Drive Units MR-J5D_-G4

- The product lines of the 400 V include converter separate type drive units of MR-J5D_-G4 available in 1-axis/2-axis/3-axis types.
- Combined with an MR-CV_4 power regeneration converter unit, MR-J5D_-G4 can configure a servo system with energy and space savings and less wiring.
- MR-J5D_-G4 supports safety communication of CC-Link IE TSN, enabling functional safety without a dedicated unit. Even for a multi-axis servo system, functional safety can also be applied with network cables.

Features of MR-J5D_-G4 Drive Units

- The common DC bus connection saves energy and space, and reduces wiring.
- MR-J5D2-G4 (2-axis drive unit)/MR-J5D3-G4 (3-axis drive unit) save space and reduce wiring further.
- MR-J5D_-G4 supports safety sub-functions as standard. The safety communication of CC-Link IE TSN enables the safety sub-functions such as STO to be set for each axis of the multi-axis drive units.
- The drive units are equipped with a replaceable cooling fan unit, which can be easily replaced by users.

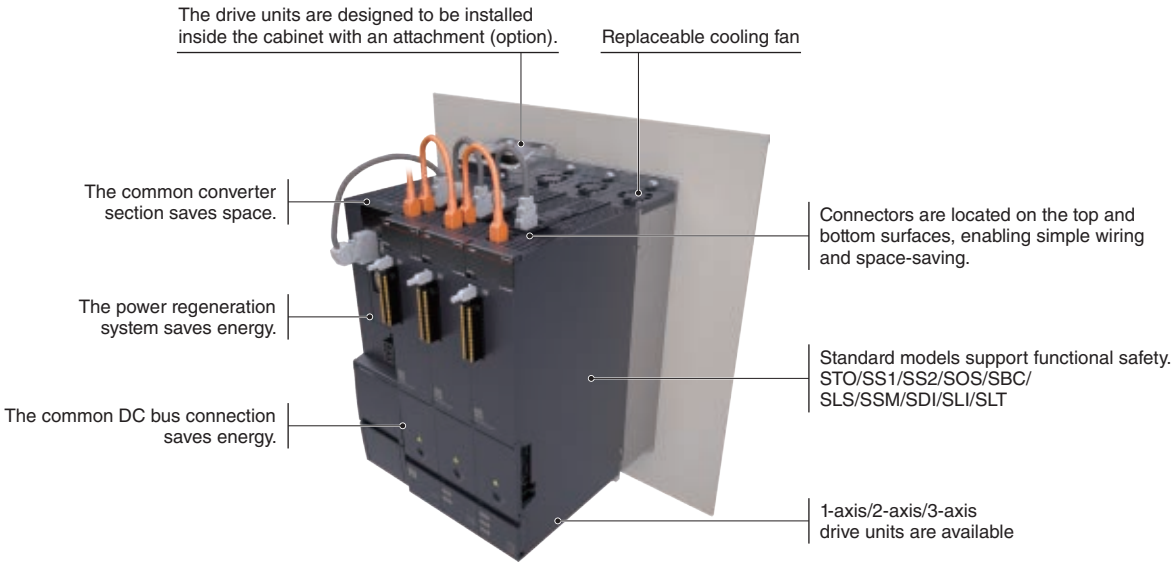

Space-Saving with 3-Axis Drive Units (Smaller Width)

The 400 V 3-axis drive units offer space saving. For example, two units of 3-axis drive units for operating six axes occupy 200 mm less installation width than six units of 1-axis drive units.
In addition, using multi-axis drive units reduces the number of molded-case circuit breakers and magnetic contactors.

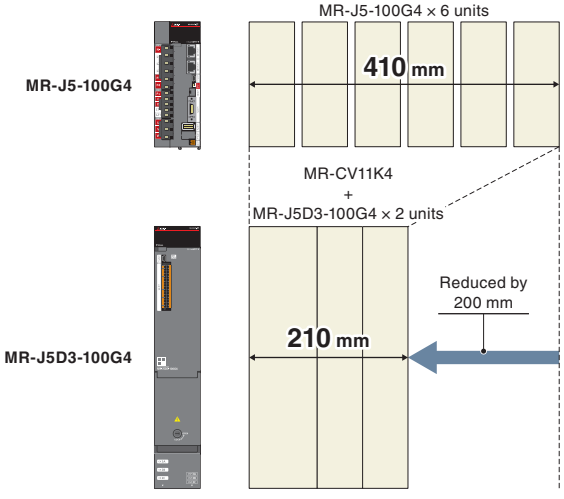

Further Energy-Saving with Common DC Bus Connection and Power Regeneration System

Connecting multiple MR-J5D_-G4 drive units to an MR-CV_4 power regeneration converter unit by a common DC bus connection allows the drive units to use regenerative energy from the other drive units on the connection.
Furthermore, the MR-CV_4 power regeneration converter unit has a power regeneration system which returns the regenerative energy to the power supply. Other systems can use this returned regenerative energy for operation, promoting efficient energy use.
A system with MR-CV_4 does not require a regenerative option and thus reduces heat generation.

[Common DC bus connection]

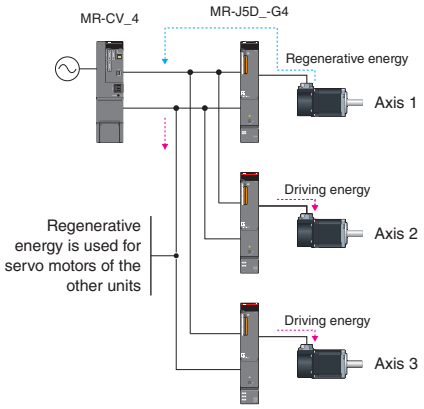

[Power regeneration system]

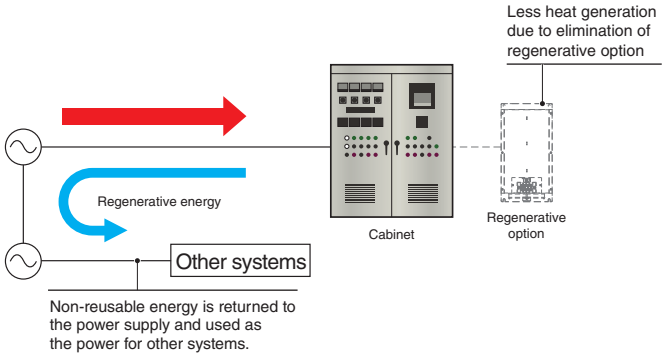

Application Examples

[Printing systems]
Optimal for rotary presses using sectional drive system where each printing unit is driven individually.

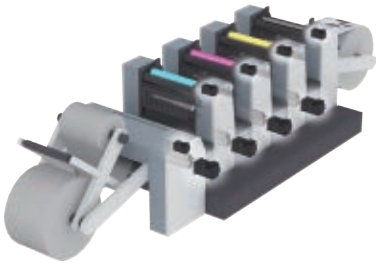

[Slitting machines]
Optimal for converting machines consisting of unwinding axes, roller axes, and winding axes.

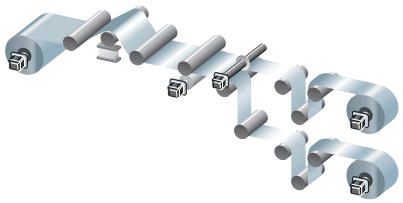

Common Bus Connection Energy-Saving System Utilizing a Large-Capacity Servo Amplifier

An energy-saving system using a common bus connection can be configured without an option, such as a converter unit, by utilizing the built-in converter of a large-capacity servo amplifier (12 to 25 kW).

* For details, refer to "MR-J5 User's Manual".

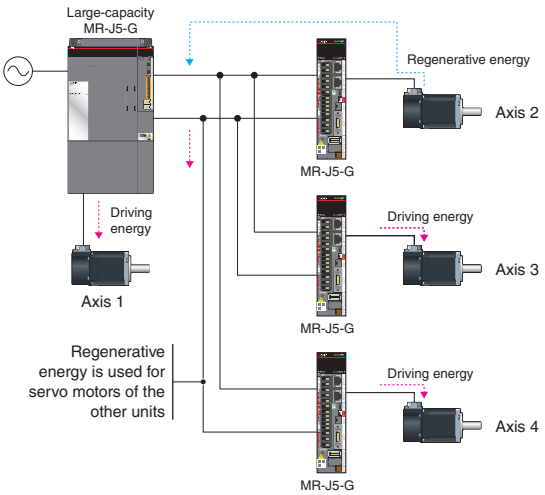

Predictive Maintenance

The servo amplifiers detect signs of machine failure by monitoring the operation status.

Maisart is an abbreviation for “Mitsubishi Electric's AI creates the State-of-the-ART in technology.” Mitsubishi Electric is leveraging original AI technology to make devices smarter.

Machine Diagnosis (Ball Screws/Linear Guides)

This function supports predictive maintenance by estimating frictions and vibrations of mechanical drive components such as ball screws and linear guides.

- Friction failure prediction with the friction estimation function
- Vibration failure prediction with the vibration estimation function

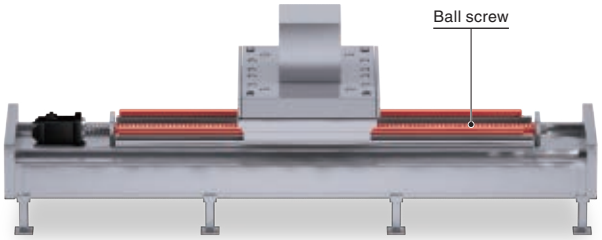

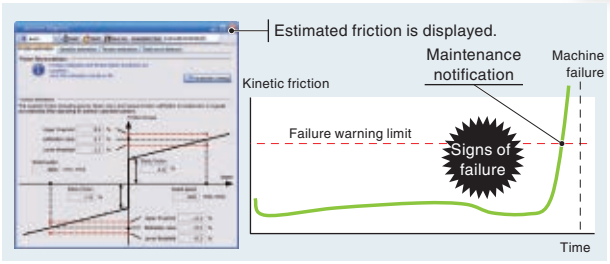

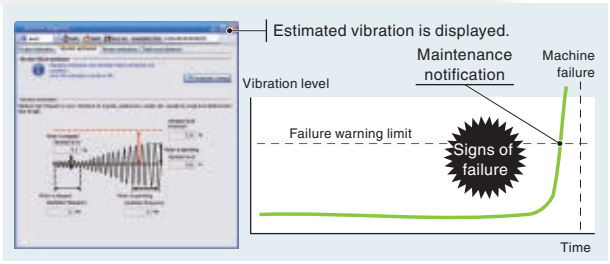

Machine Diagnosis (Belts)

This function detects aging deterioration of belts in advance by the static friction failure prediction and the tension deterioration prediction with the belt tension estimation.

- Static friction failure prediction
- Belt tension deterioration prediction

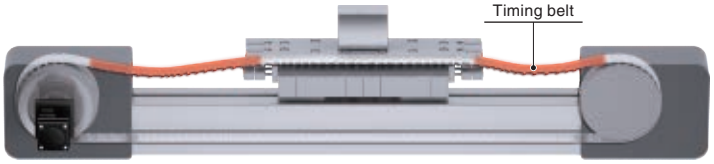

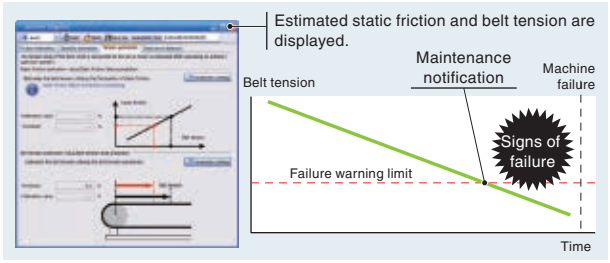

Machine Diagnosis (Gears) *1

With this function, the servo amplifier generates commands automatically, and executes to-and-fro positioning operation to estimate the amount of gear backlash. Gear failure is predicted based on the set nominal values for backlash.

- Backlash estimation function
- Gear failure prediction

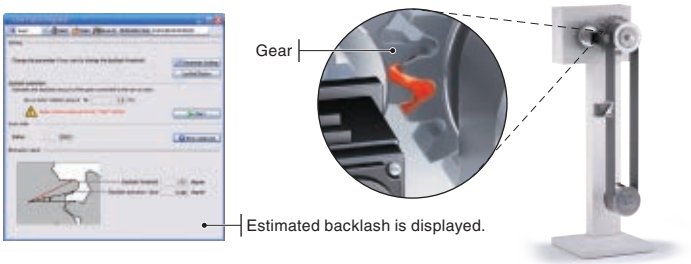

*1. The machine diagnosis (gears) does not work during normal operation.

Preventive Maintenance

Machine Diagnosis (Mechanical Drive Components)

This function estimates when a machine failure will occur based on the total travel distance of the servo motor and notifies when it is time for replacement if the rated service life of the mechanical drive components is set.

● Machine total travel distance failure prediction

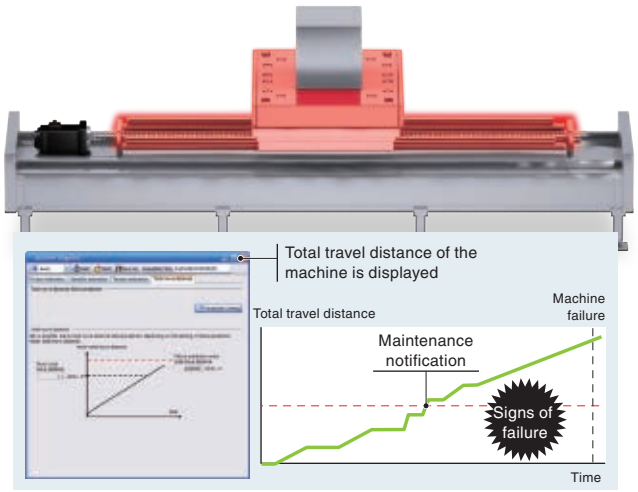

Servo Amplifier Life Diagnosis

This function displays the cumulative energization time and the number of inrush relay on/off times. The data can be used to check the service life of the parts as a rough guide.

● Cumulative energization time (Smoothing condenser/cooling fan life span)
● The number of inrush relay on/off times (Inrush relay life)

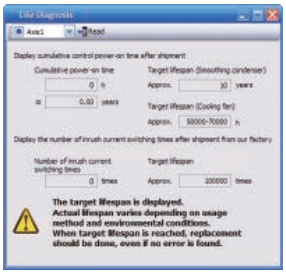

Corrective Maintenance

Drive Recorder

This function continuously monitors the servo status and records the status transition such as a trigger condition before and after an alarm for a fixed period of time. Reading the servo data on MR Configurator2 helps you analyze the cause of the alarm. In addition to the monitor values and the waveform of the past 16-time alarms in the alarm history, the system configuration and the servo parameters are displayed. Alarm occurrence time is also displayed when the servo amplifier and the controller are normally in communication on CC-Link IE TSN. The data can be outputted to a GX LogViewer format file.

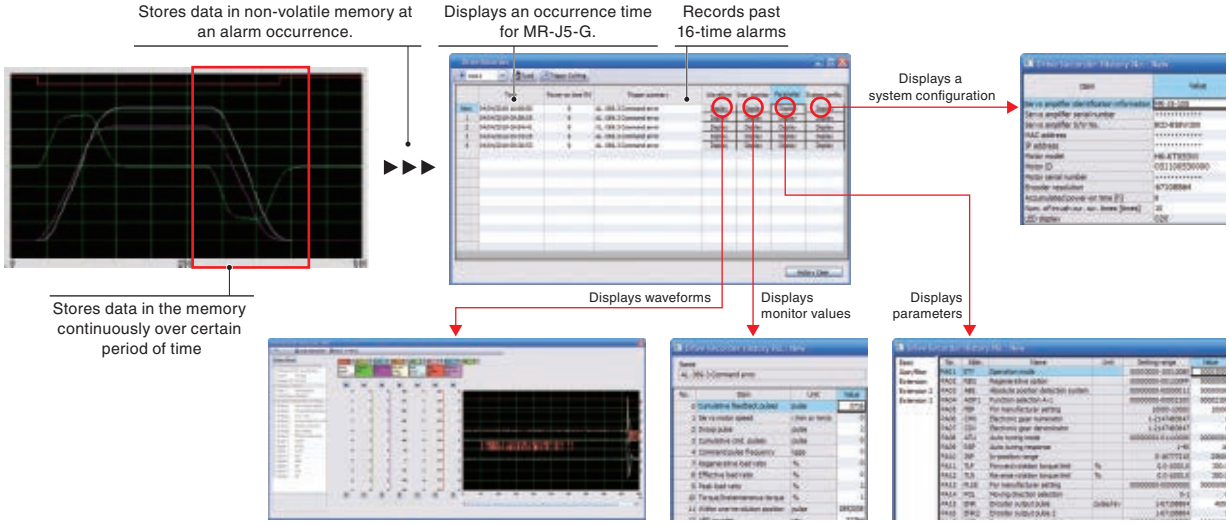

Connection/Communication Diagnosis

Disconnection Detection

The servo amplifiers are equipped with both input open-phase detection and output open-phase detection. Input open-phase detection detects an open phase of the main circuit power supply of the servo amplifier, and output open-phase detection detects an open phase of the servo motor power supply. The alarm can be distinguished from other alarms such as the overload alarm, reducing the time required to restore the system.
MR-J5D_-G4 drive units support only output open-phase detection.

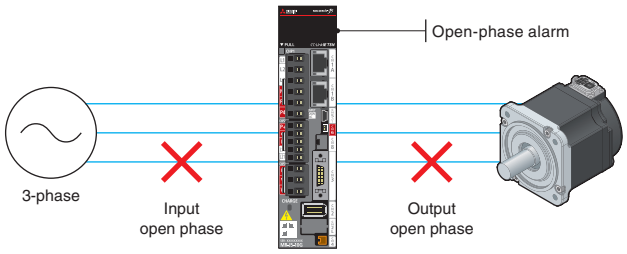

Servo Motor Incorrect Wiring Detection

Multi-axis servo amplifiers MR-J5W_-G detect servo motors with a different capacity that are incorrectly connected to the A-axis/B-axis/C-axis, contributing to servo motor protection. The servo amplifiers obtain the capacity information of the connected servo motors from the encoders and check whether the servo motors which are connected to the power connectors match the capacity information. If the information is not matched, an alarm occurs. *1

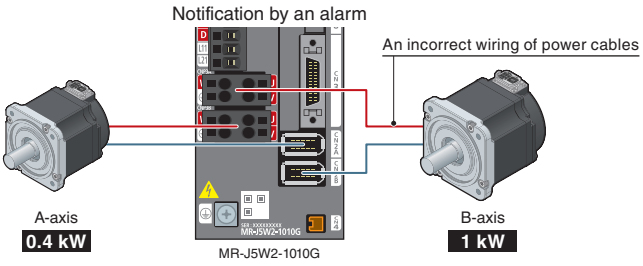

*1. The incorrect wiring detection does not work for servo motors with the same capacity.

Encoder Communication Diagnosis

The encoder communication diagnosis checks the encoder communication circuit in the servo amplifier. This function is useful for classifying the cause of errors (such as disconnected encoder cables) when the encoder communication alarm occurs.

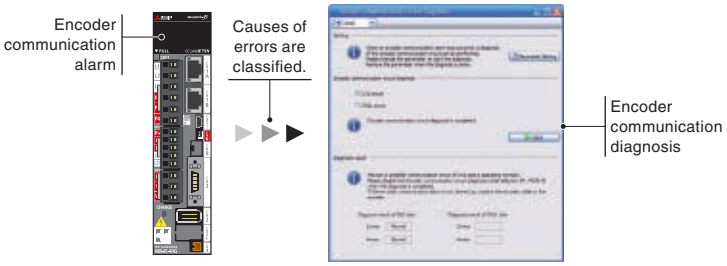

Pressure Control NEW

High-Accuracy and Stable Pressure Control

The analog signal from a pressure sensor (load cell*1) is input to MR-J5-G-LL/MR-J5-B-LL to control the pressure.
The pressure can be kept constant even while the load is changing.
The pressure model adaptive control feed forward enables pressure control with high response and reduced overshoot.

*1. A force sensor that enables force measurement by converting force into an electrical signal.

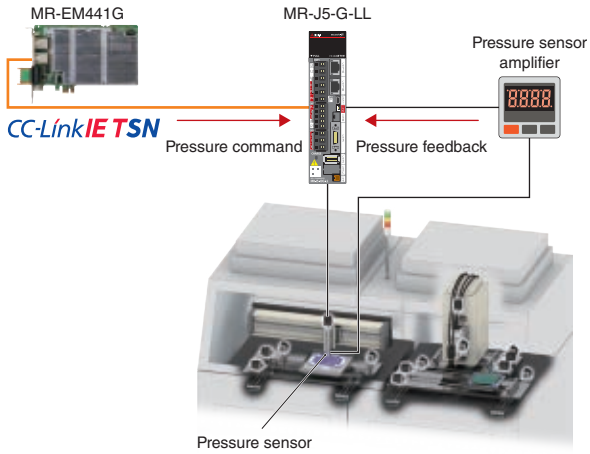

Path Control

Super Trace Control

This function reduces a position deviation to nearly zero not only during constant-velocity operation, but also during constant acceleration/deceleration.
The path accuracy will be improved in high-rigidity machines.

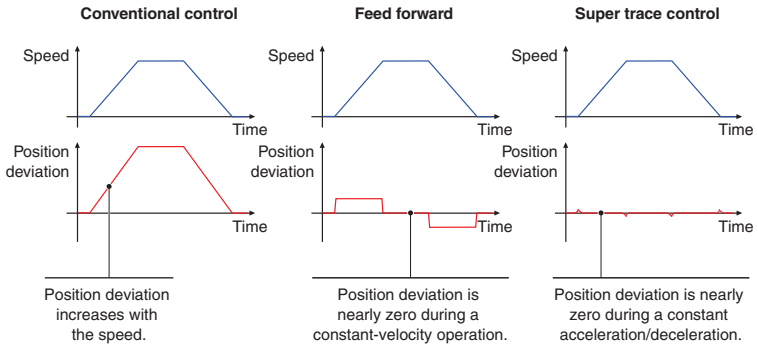

Lost Motion Compensation

This function suppresses quadrant protrusion caused by friction and torsion generated when the servo motor rotates in a reverse direction. Therefore, the accuracy of circular path will be improved in path control used in XY table, etc.

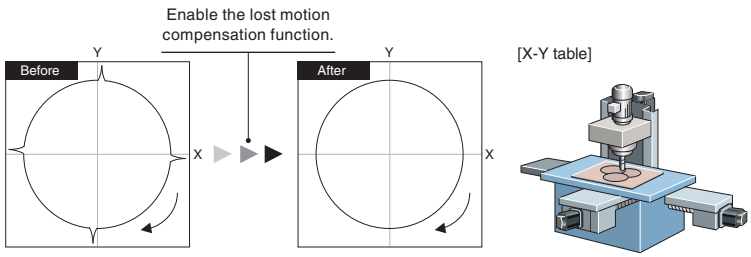

Suppression of quadrant protrusion of circular path

Path Tracking Model Adaptive Control

This function reduces path errors which occur when the servo motor reciprocates. Normally, when positioning control is executed, the model adaptive control adjusts the control to shorten a settling time. Instead, this function reduces overshooting to improve path accuracy, which is suitable for machines that require high-accuracy path control such as processing machines.

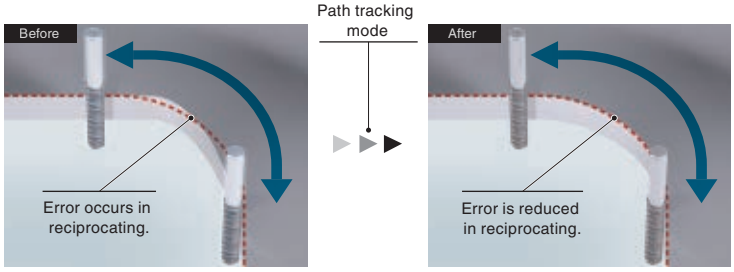

Safety Sub-Functions

Built-in Safety Functions and a Wide Range of Safety Sub-Functions

MR-J5-G-HS/MR-J5-G-RJ/MR-J5W_-G/MR-J5D_-G4 have a built-in safety control part, supporting safety sub-functions without a functional safety unit. Combining the servo amplifiers with HK-_WS servo motors with functional safety further enhances the safety level.
The servo amplifiers support the safety sub-functions of STO/SS1/SS2/SOS/SBC/SLS/SSM/SDI/SLI/SLT at a safety level of SIL 2 or SIL 3.

MR-J5-G-HS

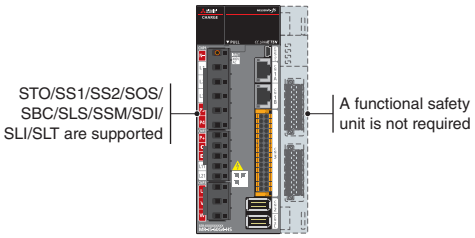

Servo motors with functional safety support the safety sub-functions at a higher safety level. The functional safety encoders provide the servo motor positions and speeds necessary for the safety sub-functions at a safety level of Category 4 PL e, SIL 3.
Encoder cables for the servo motors with functional safety are the same as for the standard servo motors.

Servo motor with functional safety
HK-_WS

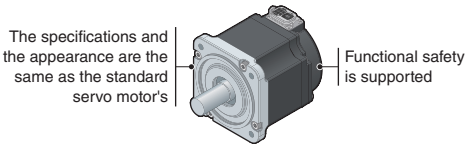

Wide Range of Safety Functions

The enhanced safety sub-functions contribute to improving equipment safety.

Item		MR-J5-G MR-J5-B(-RJ) MR-J5W_-B MR-J5-A(-RJ)	MR-J5-G-RJ MR-J5W_-G MR-J5D_-G4	MR-J5-G-HS
Functional safety	Safety sub-function	STO	STO/SS1/SS2/SOS/SBC/SLS/SSM/SDI/SLI/SLT	
	Safety sub-function via network	Not supported	Supported*1	
	Input device	One point		Three points
	Output device	One point		Three points

*1. EtherNet/IP® is not supported.

Safety Sub-Functions via Functional Safety I/O Signals

A safety system can be flexibly configured with MR-J5-G-HS by directly connecting functional safety I/O signals to it without using a safety CPU or a safety remote I/O module.
The servo amplifier supports three points of functional safety I/O signals, enabling execution of multiple safety sub-functions.
For direct wiring, the test pulse diagnosis of MR-J5-G-HS provides the safety sub-function at a safety level of Category 4 PL e, SIL 3.

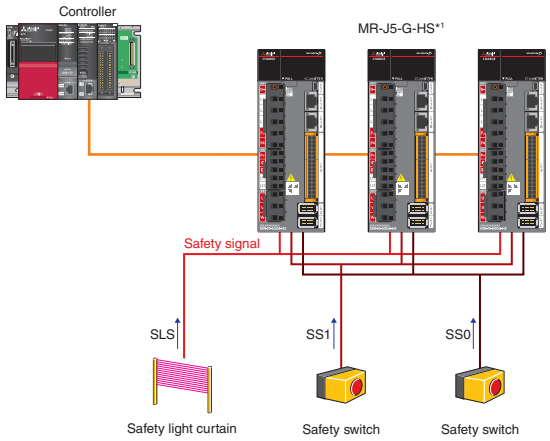

When a safety controller is used, the logic of safety devices can be easily created.
The test pulse diagnosis of the safety controller provides the safety sub-function at a safety level of Category 4 PL e, SIL 3.

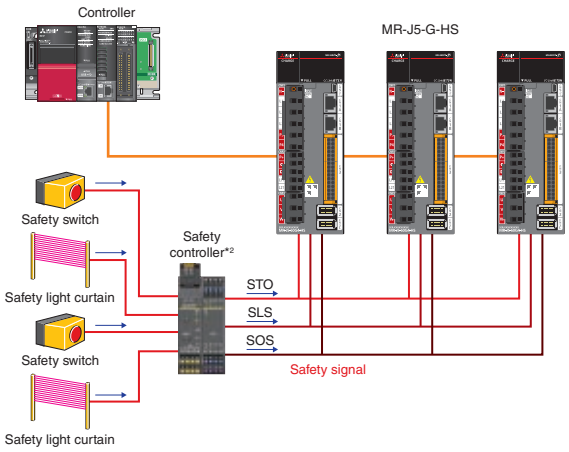

*1. When the test pulse diagnosis of the safety signal is executed with MR-J5-G-HS, the applicable safety level is Category 4, PL e, SIL 3.
*2. When the test pulse diagnosis of the safety signal is executed with a safety controller compliant with Category 4, PL e, SIL 3, the applicable safety level is Category 4, PL e, SIL 3.

Safety Communication Function via CC-Link IE TSN*2

CC-Link IE TSN enables building a system where safety and non-safety communications are mixed.
When combined with R_SFCPU-SET safety CPU and RD78G Motion module, MR-J5-G-HS/MR-J5-G-RJ/MR-J5W_-G/MR-J5D_-G4 can receive safety signal data of the safety CPU through CC-Link IE TSN.
Wiring the safety signals to the servo amplifiers is not necessary.

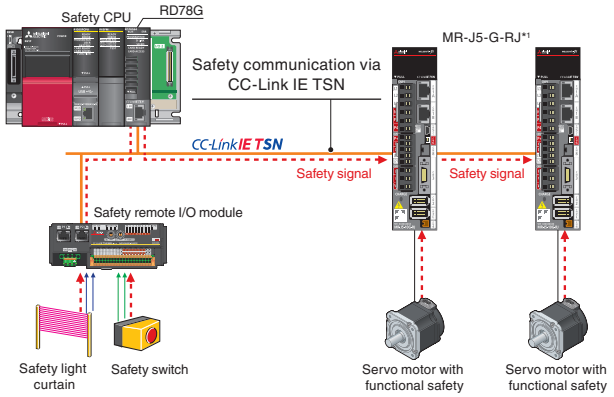

*1. Refer to "Safety Sub-Functions" in section 1 of this catalog for the compatible servo amplifiers.
*2. MR-J5-G-HSN1/MR-J5-G-RJN1/MR-J5W_-G-N1/MR-J5D_-G4-N1 support Safety over EtherCAT® (safety data communication protocol) of EtherCAT®.

Supporting Flexible Driving System

Fully Closed Loop Control*1

Supporting a fully closed loop control system as standard, MR-J5-G/MR-J5W2-G/MR-J5D1-G4/MR-J5D2-G4/MR-J5-B/MR-J5W2-B/MR-J5-A servo amplifiers enable further precise positioning.

*1. MR-J5-G/MR-J5W2-G/MR-J5-B/MR-J5W2-B/MR-J5-A servo amplifiers are compatible only with two-wire type serial encoders. For four-wire type serial and pulse train interface (A/B/Z-phase differential output type) encoders, use MR-J5-G-HS/MR-J5-G-RJ/MR-J5D1-G4/MR-J5-B-RJ/MR-J5-A-RJ.

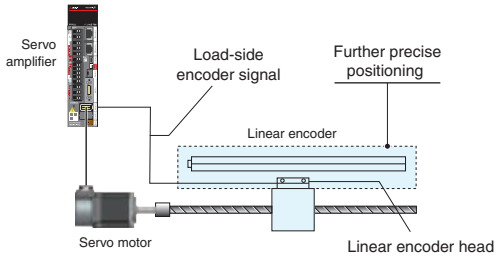

Scale Measurement Function

The scale measurement function transmits scale measurement data of a scale measurement encoder to a controller via network when the scale measurement encoder such as a linear or rotary encoder is connected to a servo amplifier. This function enables flexible wiring from the scale measurement encoder.

Servo amplifiers supporting the scale measurement function

[CC-Link IE TSN-compatible]

For two-wire type encoder:

MR-J5-G/MR-J5-G-HS/MR-J5-G-RJ/MR-J5W2-G/MR-J5D1-G4/MR-J5D2-G4

For four-wire type encoder:

MR-J5-G-HS/MR-J5-G-RJ/MR-J5D1-G4

[SSCNET III/H-compatible]

For two-wire type encoder:

MR-J5-B/MR-J5-B-RJ/MR-J5W2-B

Four-wire type encoder:

MR-J5-B-RJ

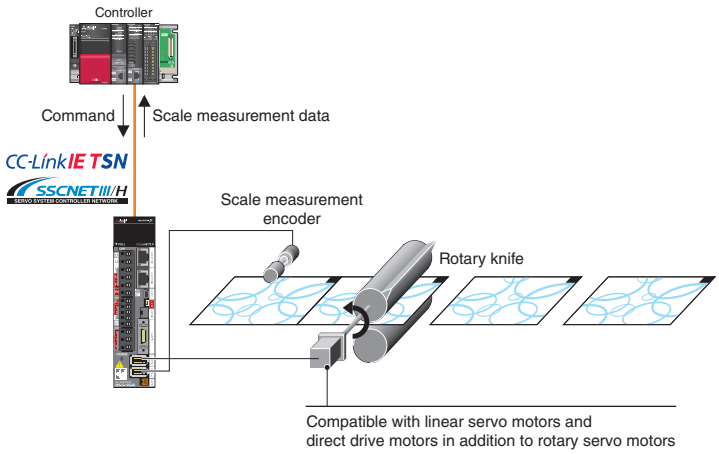

Touch Probe Function

When a touch probe (sensor) that detects the position of workpieces is connected to a servo amplifier, the touch probe function latches (stores) the position detected by the touch probe. The controller reads and uses the latched value for position correction. The latch accuracy of this function is 1 µs.

Servo amplifiers supporting the touch probe function

[CC-Link IE TSN-compatible]

MR-J5-G*1/MR-J5-G-HS/MR-J5-G-RJ/MR-J5W_-G/MR-J5D_-G4

*1. Use MR-J5-G manufactured in June 2021 or later.

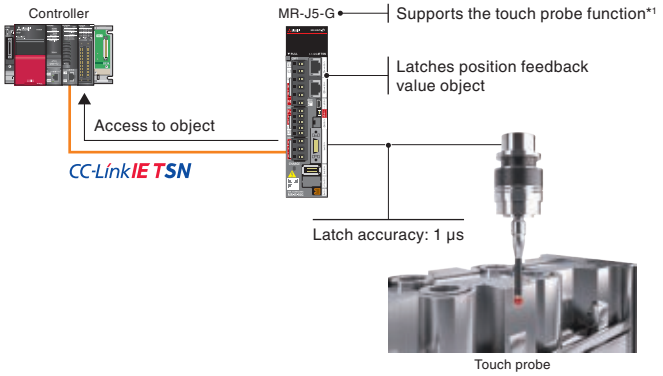

Supporting Flexible Driving System

Positioning by Using a CC-Link IE TSN Master/Local Module

A CC-Link IE TSN master/local module*2 that supports CANopen® can control the servo amplifiers.*1 The servo amplifiers support both the profile mode (position/velocity/torque) and the positioning mode (point table). *3
In the profile position mode, for example, the target positions and speeds can be set from the master station. The servo amplifier generates commands to the target positions with a start signal and starts positioning operations.

*1. RD78G/FX5-SSC-G Motion modules also support CANopen®.
*2. For the CC-Link IE TSN master/local module, refer to each module manual.
*3. For the modes supported by the master station, refer to the master station specifications.

[Profile position mode continuous operation]

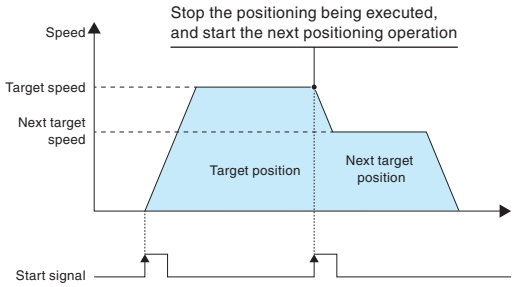

[Profile position mode continuous operation (point table)]

Point table No.	Position data	Servo motor speed	Acceleration time constant	Deceleration time constant	Dwell	Auxiliary function	M code
1	1000	2000	200	200	0	1	1
2	2000	1600	100	100	0	0	2
⋮	⋮	⋮	⋮	⋮	⋮	⋮	⋮
255	3000	3000	100	100	0	2	99

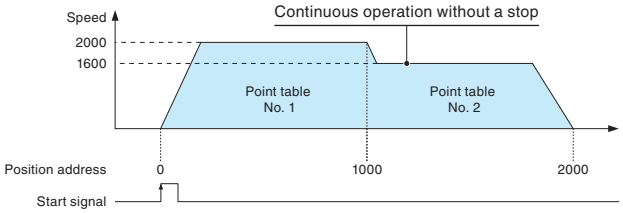

Driver Communication Function

The controller controls the master axis by using the driver communication function of the servo amplifiers (MR-J5-G/MR-J5D1-G4/MR-J5-B). The servo amplifier of the master axis transmits the torque data to the servo amplifiers of the following axes on the same network, and the servo amplifiers also drive the servo motors on the basis of the torque data transmitted from the master axis. The data is transmitted via network, and thus no special wiring is necessary.

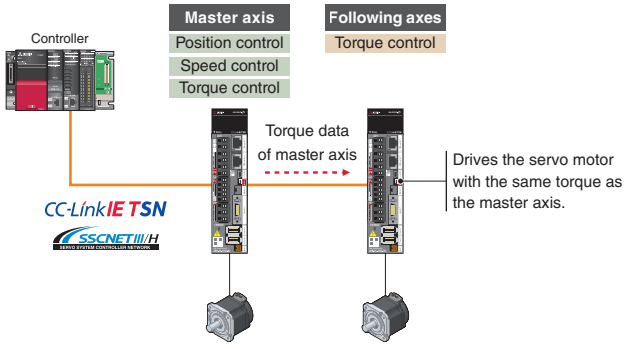

Application examples

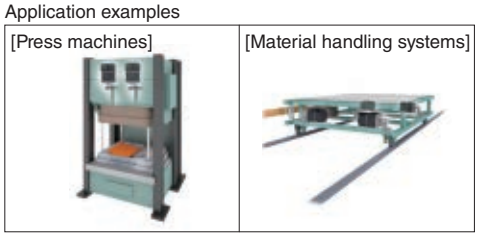

* This function is not supported by MR-J5-G-N1/MR-J5D1-G4-N1.

Compliance with SEMI-F47

MELSERVO-J5 series servo amplifiers comply with SEMI-F47 standard*1 for semiconductors and FPD manufacturing systems. (SEMI-F47 is not applicable to 1-phase 200 V AC input, DC input, and MR-J5D_-G4.)

*1. The backup capacitor may be required depending on the power impedance and operating situation for the instantaneous power failure of the main circuit power supply. Be sure to perform a test on your machine to meet the SEMI-F47 (Specification for Semiconductor Processing Equipment Voltage Sag Immunity) standard. Please use the 3-phase power supply for the servo amplifier input.

Command Interface

CC-Link IE TSN

The servo amplifiers receive commands (position/velocity/torque) from a CC-Link TSN-compatible controller at regular intervals through synchronous communication and drive the servo motors.
When combined with a Motion module or Motion Control Software, the servo amplifiers perform exact synchronous operation of axes and machines through high-speed, high-precision time synchronization.
The servo amplifiers support CiA® 402 drive profile and enable the profile mode (position/velocity/torque) and the positioning mode (point table).
When combined with the controllers supporting the profile mode, the servo amplifiers generate a positioning command to a target position, reducing loads of the controllers.

[CC-Link IE TSN-compatible]

MR-J5-G/MR-J5W_-G/MR-J5D_-G4

*1. The communication cycle of ≥ 31.25 µs is applicable when MR-J5-G/MR-J5D1-G4 are combined with RD78GH.

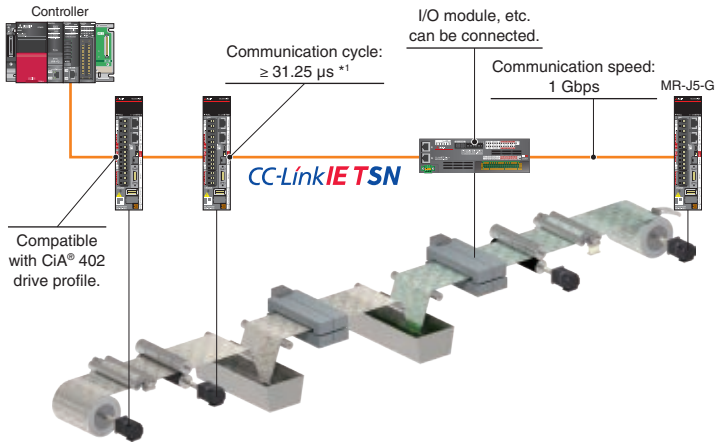

SSCNET III/H

Replacement of the servo amplifiers in the existing system with MR-J5-B/MR-J5W_-B is possible, which enables the MELSERVO-J5 series servo system to be configured with the use of the existing programs of the servo system controller.
The parameter conversion function of the engineering software and "Transition from MELSERVO-J4 Series to J5 Series Handbook" are available to support the replacement.

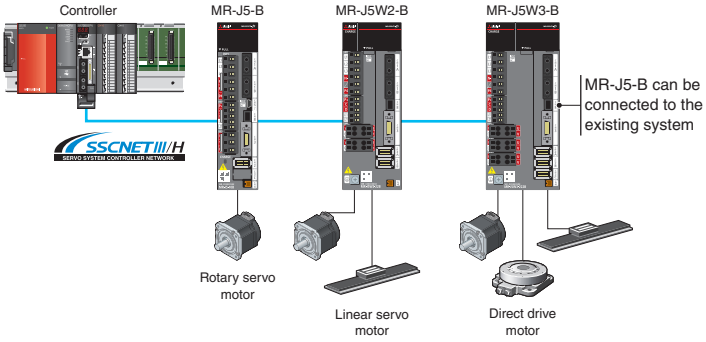

CC-Link IE Field Network Basic

CC-Link IE Field Network Basic-compatible master stations such as an FX5U CPU module can control MR-J5-G/MR-J5D1-G4 servo amplifiers. The servo amplifier can be operated as a CANopen® device via a link device.
The profile mode (position/velocity/torque) and the positioning mode (point table) are supported.
MR-J5-G/MR-J5D1-G4 servo amplifiers can be connected to existing systems using MR-J4-GF.
In addition, MR-J5-G newly supports the line topology.*1

*1. When a device which does not support the line topology is used, the line/star mixed topology is applicable.

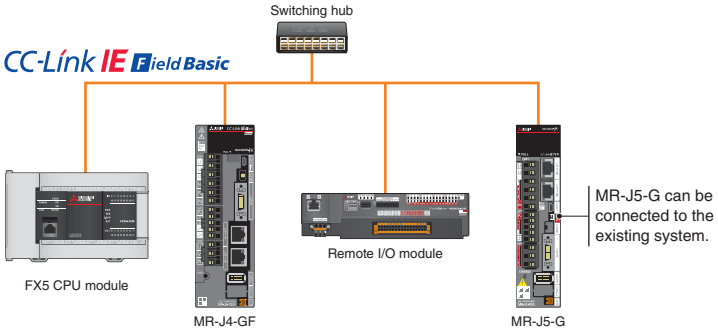

General-Purpose Interface

General-purpose interface-compatible MR-J5-A servo amplifiers support pulse trains and analog input. The control mode can be switched between position/speed/torque control modes. When an open collector is used, both sink and source inputs are enabled.

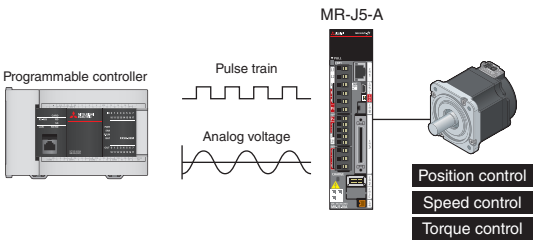

EtherCAT®

EtherCAT®-compatible servo amplifiers are available, enabling higher-performance MR-J5 servo amplifiers with enhanced functions on the EtherCAT® system.
The servo amplifiers support the touch probe.*2 (Latch accuracy: 1 µs)



[EtherCAT®-compatible]
MR-J5-G-N1/MR-J5-G-HSN1/MR-J5-G-RJN1/MR-J5W_-G-N1/
MR-J5D_-G4-N1

Communication specification	CANopen over EtherCAT® (CoE) Ethernet over EtherCAT® (EoE) Safety over EtherCAT® (FSoE)
Drive profile	CiA® 402
Communication cycle *1	125 µs, 250 µs, 500 µs, 1 ms, 2 ms, 4 ms, 8 ms
Control mode	Cyclic synchronous position mode (csp)
	Cyclic synchronous velocity mode (csv)
	Cyclic synchronous torque mode (cst)
	Profile position mode (pp)
	Profile velocity mode (pv)
	Profile torque mode (tq)
	Homing mode (hm)

*1. The minimum communication cycle varies by the model type.
*2. For MR-J5-G-N1, use the servo amplifiers with firmware version C0 or later and manufactured in June 2021 or later.

EtherNet/IP®

The MR-J5-G-N1 servo amplifier also supports EtherNet/IP®.
A high-speed, high-precision servo system can be configured with EtherNet/IP®.



[EtherNet/IP®-compatible]
MR-J5-G-HSN1/MR-J5-G-RJN1/MR-J5W_-G-N1/MR-J5D_-G4-N1

Communication specification	THE CIP NETWORKS LIBRARY Volume 1 Common Industrial Protocol (CIPTM) THE CIP NETWORKS LIBRARY Volume 2 EtherNet/IP® Adaptation of CIP
Drive profile	CiA® 402
Communication cycle	Select from 1 ms to 100 ms
Control mode	Profile position mode (pp)
	Profile velocity mode (pv)
	Profile torque mode (tq)
	Homing mode (hm)

Servo Engineering Software MELSOFT MR Configurator2

Tuning, monitor display, diagnosis, reading/writing parameters, and test operations are easily performed on a personal computer. This powerful software tool supports a stable machine system and optimum control, and moreover, shortens setup time.

Parameter setting and docking help

Set parameters using the function display in the list without worries about the parameter No. and digits. Information related to the parameter being set is displayed in the docking help window. The latest e-Manual is also displayed in the docking help.

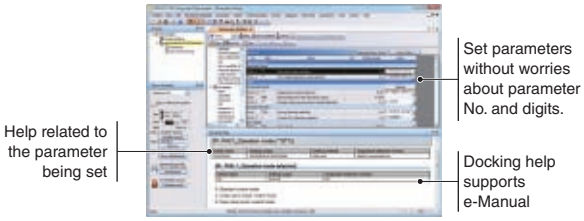

Supporting multi-axis project

Set parameters and monitor operation for multiple servo amplifiers through connecting to one of the servo amplifiers. Connecting via the Ethernet switching hub and the controller is also possible.

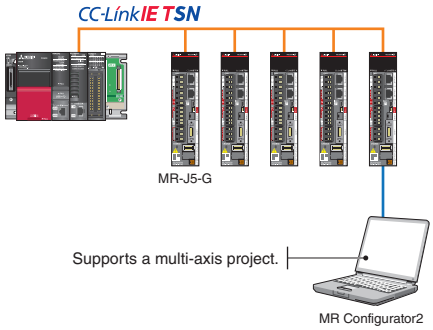

Tuning function

Adjust control gains finely on the [Tuning] window manually for further performance after the quick tuning and the one-touch tuning.



Graph function

Obtain graphs of 7 channels for analog and 8 channels for digital. Various servo statuses are displayed in the waveform at one measurement, supporting setting and adjustment. Convenient functions such as [Overwrite] for overwriting multiple data and [Select history] for displaying graph history are available. Two types of signals can be used as a trigger signal with an OR/AND condition.

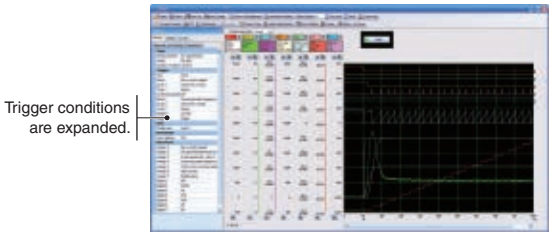

Machine analyzer function

Input random torque to the servo motor automatically and analyze frequency characteristics (0.1 Hz to 8 kHz) of a machine system just by clicking the [Start] button. This function supports setting of machine resonance suppression filter, etc.

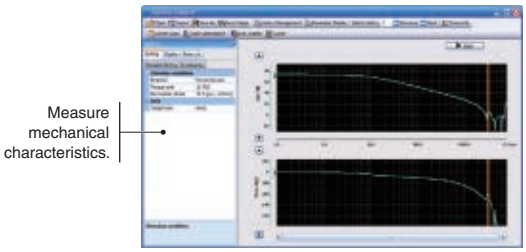

Software reset

Reset the software for the servo amplifier with this new function. Setting switches and parameters is enabled without turning off the main circuit power supply of the servo amplifier.



Drive System Sizing Software MELSOFT Motorizer

Select the most suitable servo motors, servo amplifiers, and regenerative options for your machine just by setting machine specifications and operation patterns. You can select a suitable combination from various results.
This software also supports multi-axis systems, enabling you to set operation patterns and select options for multiple axes.

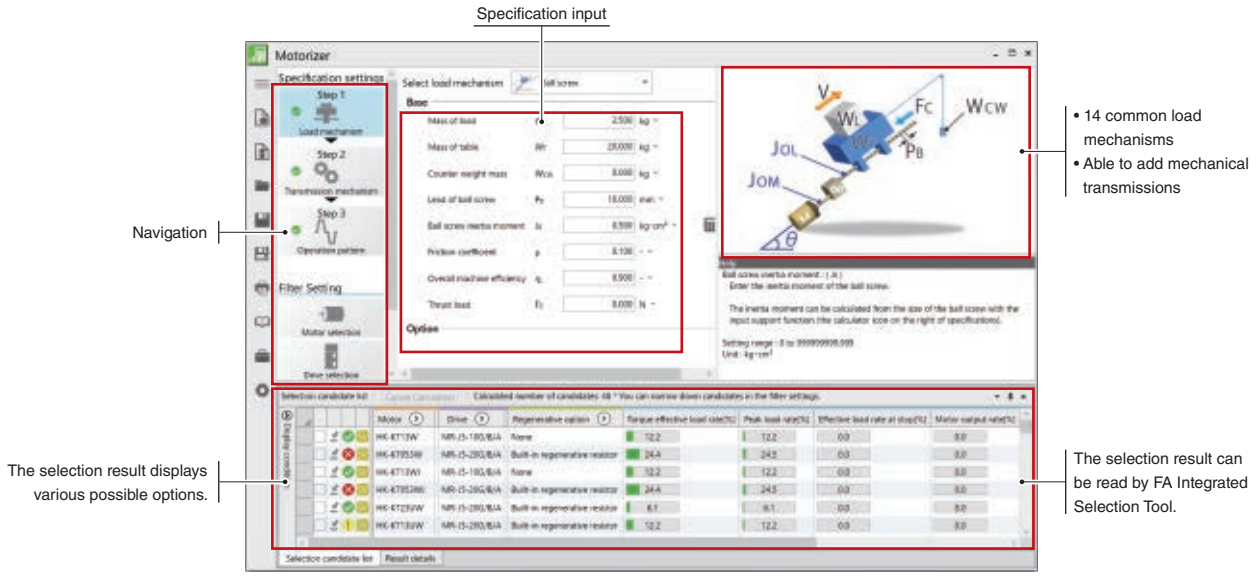

Flexible support for load mechanisms

- Select a load mechanism from 14 common types.
- Add transmission mechanisms such as a coupling.
- Set an inclination angle of the load mechanisms as desired.

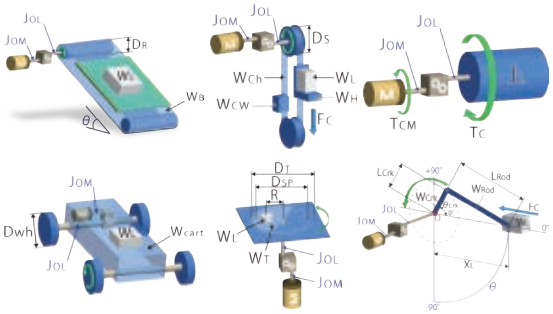

Compatible with multi-axis systems

- Supports the multi-axis servo amplifiers and the converters.
- Set operation patterns for multiple axes.
- Select regenerative options for a multi-axis system.

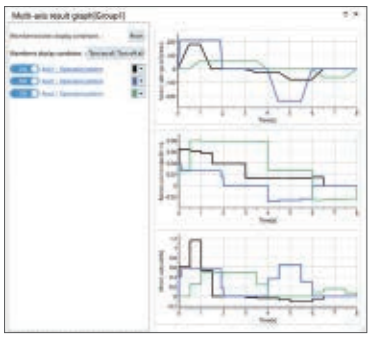

Selection of several patterns

- Displays a list of load to motor inertia ratio, peak torque, etc., of each selection.
- Compatible with the expanded combinations of the servo amplifiers and the servo motors.
- Set threshold values for judgment.
- Displays energy-saving effect by multi-axis system

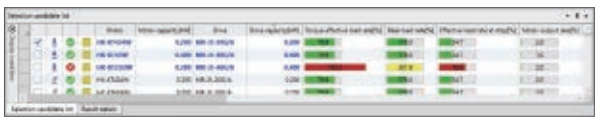

Tutorial video

- Illustrates how to use the software and select drive systems in the video.



FA Integrated Selection Tool

FA Integrated Selection Tool is available on the global website, so you can select multiple devices/entire system with one tool.
Select devices such as programmable controllers and AC servos by device and network type. In addition, this tool can read servo motors and servo amplifiers selected on Motorizer.
Select necessary options such as encoder cables. Easily create system configuration diagrams and lists of necessary purchases to prevent mistakes when ordering.
Furthermore, this tool supports the replacement of your current MELSERVO-J4 series system with the MELSERVO-J5 series system.

Selection Tool



Selection of controllers/servo motors/servo amplifiers

● Read selection results from Motorizer.



Selection of options

● Prevent selection mistakes.



Migration mode

● Replacement function from MR-J4 to MR-J5



Purchase list

● Export to a file in Excel format.



e-Manual

Instruction manuals for the MELSERVO-J5 series are available in e-Manual format. These manuals are linked with manuals for other products such as servo motors and controllers. The e-Manual lets you obtain necessary information quickly and also allows you to keep an enormous number of manuals as one database.
Currently supported languages: English, Japanese, Chinese

Features

● Use all necessary manuals as one database
● Download and use manuals in your local environment
● Use the e-Manual application on tablets
● Download and update manuals quickly and easily
● Search for desired information across multiple manuals



Check manuals across the controllers, the servo amplifiers and the servo motors

MEMO

A broader selection of capacities to match various applications for smart equipment

Rotary Servo Motors

HK Series

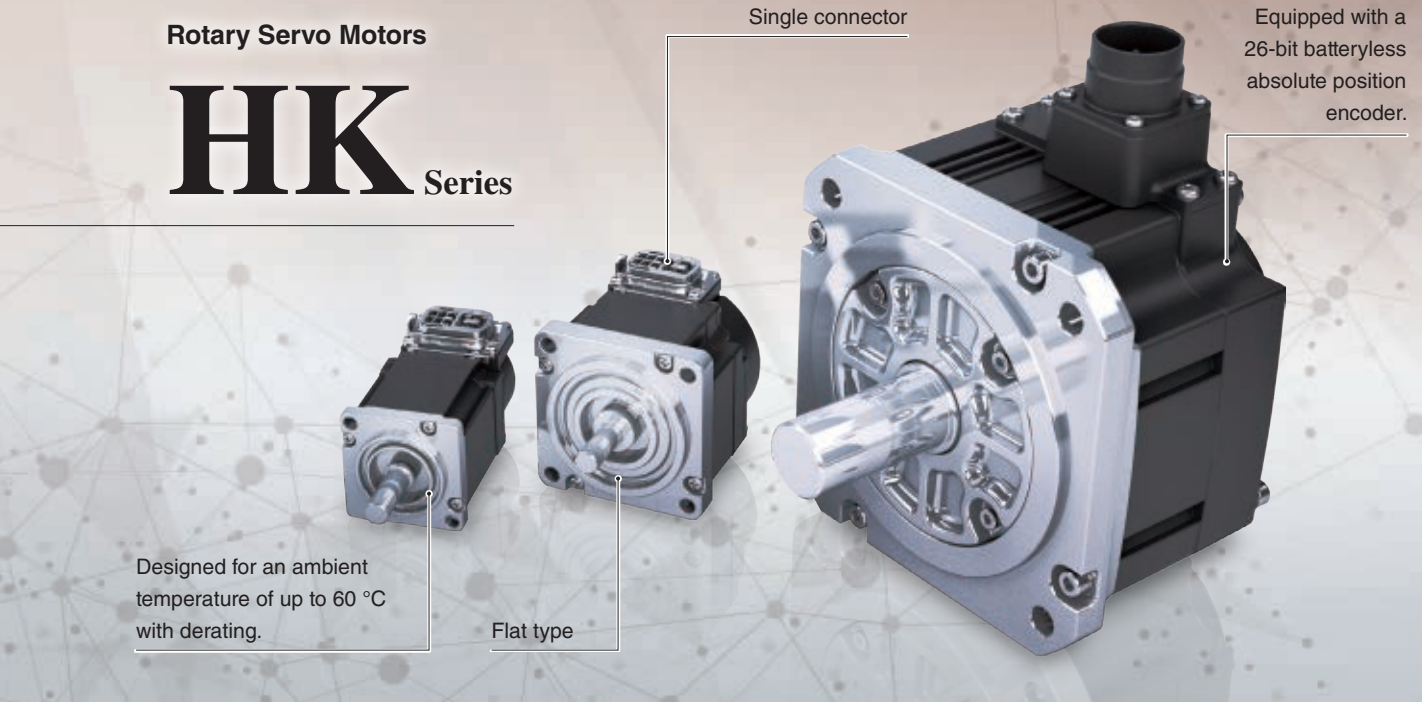





Small capacity, low inertia

HK-KT Series

Rated speed: 3000 r/min *1
Maximum speed: 6700 r/min *1
Our product line includes 400 V and flat type models.
The servo motors have an all-in-one connector, making the connection simple.





Medium capacity, medium inertia

HK-ST Series

Rated speed: 2000 r/min, 3000 r/min
Two types of rated speed are available.
Our product line includes 400 V and flat type models.
The cables for the encoder, the electromagnetic brakes, and the power are equipped with one-touch lock.



Medium/large capacity, low inertia NEW

HK-JT Series

Rated speed: 1500 r/min *1
Maximum speed: 3000 r/min *1
The one-ouch lock is available. (1500 r/min, 15 kW or less)



Small capacity, ultra-low inertia

HK-MT Series

Rated speed: 3000 r/min
Maximum speed: 10000 r/min (available with the high-speed type models*2)
The servo motors have an all-in-one connector, making the connection simple.





Medium capacity, ultra-low inertia

HK-RT Series

Rated speed: 3000 r/min
Maximum speed: 6700 r/min *1
Our product line includes 400 V and flat type models.
The servo motors (1 to 2 kW) have an all-in-one connector, making the connection simple.

*1. The speed varies by the model type.
*2. The high-speed type models are equipped with an incremental encoder.

Product Lines

: Future release planned

Series	Inertia	Motor type	Servo amplifier power supply	Capacity
HK-KT	Low inertia	HK-KT_W	200 V AC	0.05 kW to 2.0 kW
			400 V AC	0.05 kW to 0.15 kW
		HK-KT_4_W	200 V AC	0.2 kW to 1.0 kW
			400 V AC	0.4 kW to 2.0 kW
HK-MT	Ultra-low inertia	HK-MT_W	200 V AC	0.05 kW to 1.0 kW
HK-ST	Medium inertia	HK-ST_W	200 V AC	0.5 kW to 7.0 kW (Up to 11 kW)
		HK-ST_4_W	200 V AC	0.3 kW to 4.2 kW (Up to 5.5 kW)
			400 V AC	0.5 kW to 7.0 kW (Up to 11 kW)
HK-RT	Ultra-low inertia	HK-RT_W	200 V AC	1.0 kW to 7.0 kW
		HK-RT_4W	400 V AC	1.0 kW to 7.0 kW
HK-JT NEW	Low inertia	HK-JT_J	200 V AC	7 kW to 22 kW
		HK-JT_4_J	400 V AC	7 kW to 22 kW

0.1 kW 1.0 kW 10 kW

Notes: The motor types are classified by the power class (200 V or 400 V) of the servo motors. The servo motors can be driven regardless of the servo amplifier power supply.
For details of the rotary servo motors, refer to "4 Rotary Servo Motors".

Batteryless Absolute Position Encoder as Standard

Eliminate the Need for Purchase/Replacement/Stock Control

Servo motors come equipped with a batteryless absolute position encoder as standard, making it possible to configure absolute position systems without the use of batteries or any other options.
Moreover, maintenance costs are reduced as a result of eliminating the battery replacement and stock control.

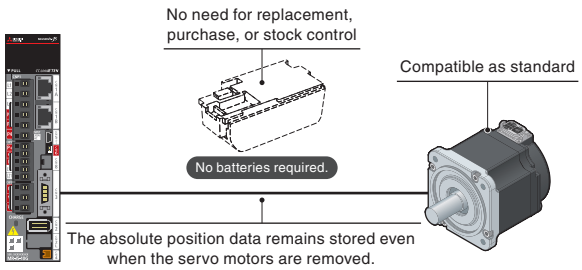

Reduce Wiring for Multi-Axis Systems

In a conventional multi-axis system, battery cables are necessary between the servo amplifiers. Now that the batteries are not required with the use of the batteryless absolute position encoders, wiring battery cables for multi-axis systems is not required.

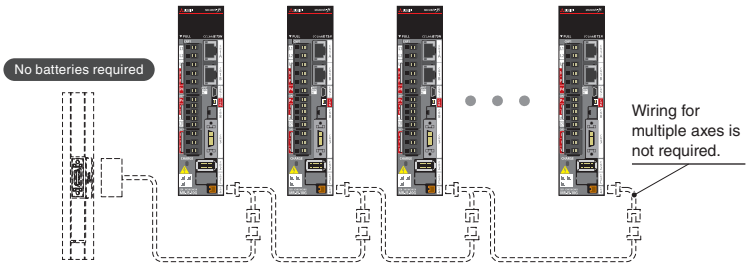

Save Time in Transporting

Position data remains stored even when the rotary servo motors are disconnected from the servo amplifiers. Thus, control cabinets can be separated from the machines without losing the position data, making it easy to transport machines for use at a new location.
The encoder does not require lithium metal batteries, allowing machines to be transported by air or sea without special handling.

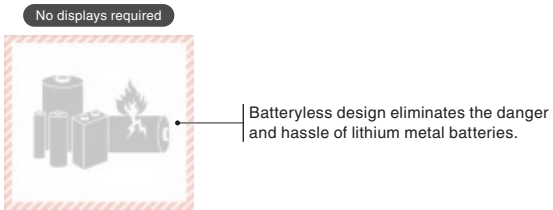

Single Connector/One-Touch Lock/Single Cable Type

Single Connector/One-Touch Lock/Single Cable Type

The single connector for the HK-KT/HK-MT/HK-RT *1 series combines the motor power supply, encoder, and electromagnetic brake into a single cable. The one-touch lock eliminates the need for tightening screws, making wiring easy. The servo motors are also compatible with the dual cable type. The cables can be mounted either horizontally or vertically according to your selection. Refer to "Options/Peripheral Equipment" for details of servo motor cables.

*1. The single connector is available for 1 to 2 kW of HK-RT series.

Horizontally mounted single cable type with one-touch lock



In the direction of the load side

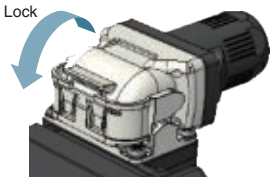

In the opposite direction of the load side

Vertically mounted single cable type with one-touch lock



Horizontally mounted dual cable type with one-touch lock

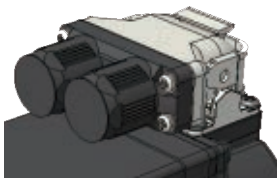

In the direction of the load side

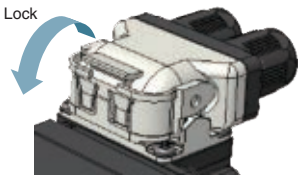

In the opposite direction of the load side

Vertically mounted dual cable type with one-touch lock



Connection example of one-touch lock with single cable type

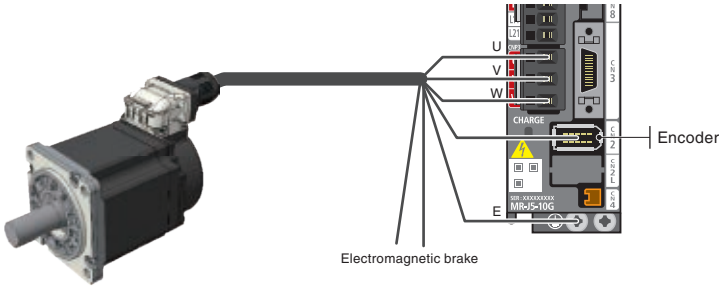

One-Touch Lock

HK-ST/HK-RT *1/HK-JT *2 series servo motors boast a greatly simplified installation process through use of the one-touch lock system, which eliminates the need for tightening screws. The servo motors are compatible with both straight and angle type connectors.

[HK-ST/HK-RT series]
The one-touch lock can be used to mount connectors for the motor power supply, encoder, and electromagnetic brake. The servo motors also support traditional screw-tightened connectors.

[HK-JT series]
The one-touch lock can be used to mount connectors for the motor power supply and encoder. The servo motors also support traditional screw-tightened connectors. The electromagnetic brake supports traditional screw-tightened connectors.

One-touch lock

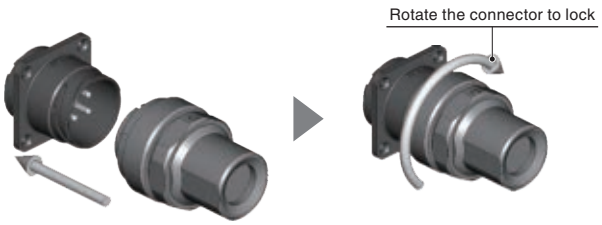

*1. The one-touch lock is available for 3.5 to 7 kW of HK-RT series.
*2. The one-touch lock is available for 1500 r/min (200 V/400 V, 7 kW, 11 kW, 15 kW).

Expanding Combinations of Servo Amplifiers and Servo Motors

The combinations of servo amplifiers and servo motors have been expanded to offer more flexible options for driving servo motors, such as combining a large-capacity servo amplifier for increased torque or combining a servo motor in a different power class. Refer to "Combinations of Rotary Servo Motors and Servo Amplifiers" for details of the combinations.

Increases Maximum Torque by Combining with Larger-Capacity Servo Amplifiers

Combining the servo motor with a larger-capacity servo amplifier increases the maximum torque, leading a shorter cycle time.

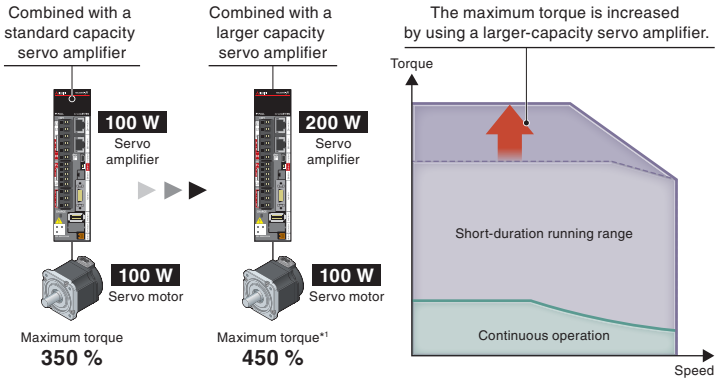

*1. When the maximum torque of HK-KT13W servo motor is increased with the 200 W servo amplifier.

Drives Smaller Capacity Servo Motors

Servo amplifiers are able to drive servo motors with a smaller capacity than the servo amplifier being used, reducing the kinds of spare parts that are needed.

For example, 400 W servo amplifiers are compatible with the following servo motors: 50 W, 100 W, 150 W, 200 W, and 400 W models.

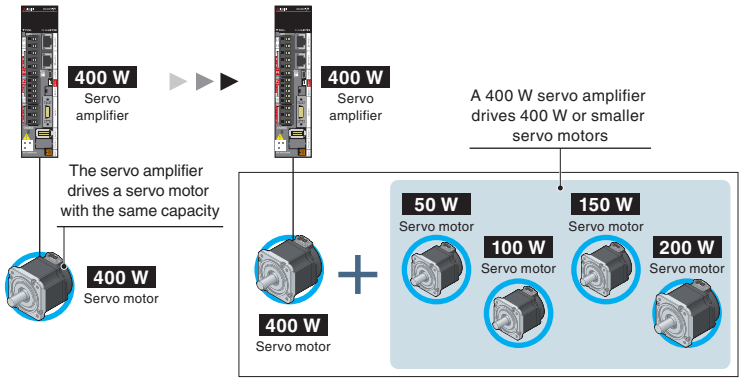

Drives 200 V/400 V Servo Motors

The 200 V servo amplifiers can drive both 200 V and 400 V servo motors, and the 400 V servo motors may produce torque that is sufficient for operation when combined with smaller-capacity 200 V servo amplifiers. Lowering of the capacity of the servo amplifier contributes to lower costs and reduced installation space.

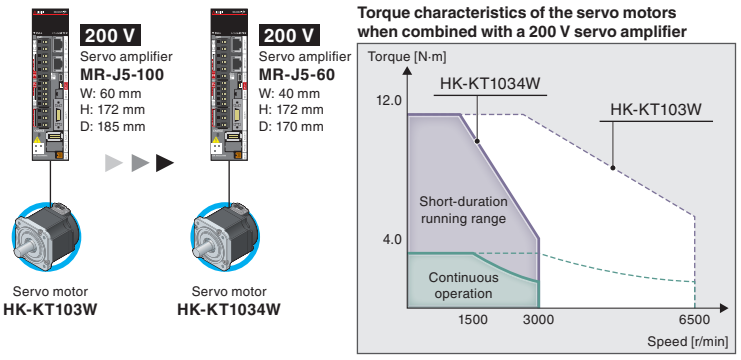

Compact Servo Motors with a Batteryless Absolute Position Encoder

HK-KT series servo motors come equipped with a batteryless absolute position encoder and are more compact than the previous generation HG-KR series. Flat types are also available in the HK-KT product line, contributing to a compact machine design.

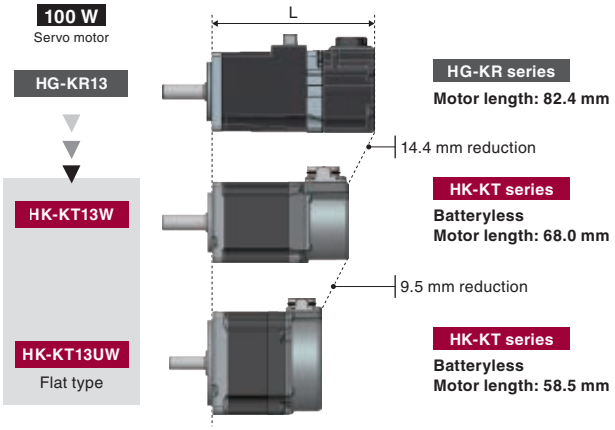

Improved Environmental Resistance

Servo motors feature enhanced environmental resistance.
Ingress protection (IP) rating of the servo motors: IP67 *1, 3
Designed for an ambient temperature of up to 60 ˚C.*2

*1. If the IP rating of the servo motor differs from those of option cables and connectors, overall IP rating depends on the lowest of all.
*2. Derate the speed/torque when using the servo motors at high ambient temperatures.
*3. For HK-JT 1500 r/min series, 15 kW or smaller is rated IP67, and 22 kW is rated IP44.

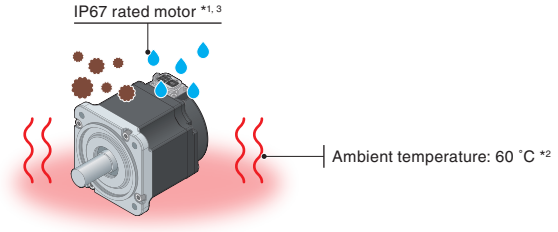

Application Examples

Semiconductor/FPD/photovoltaic manufacturing systems 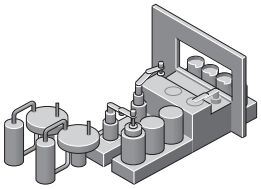	Mounters/bonders 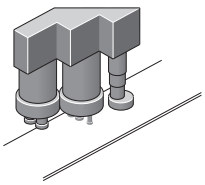	X-Y tables 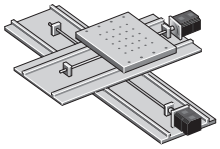	Robots 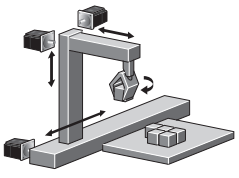
Loaders/unloaders, feeders, and sliders 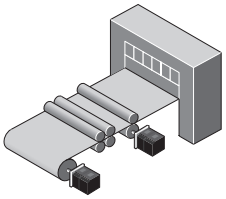	Food processing machines (filling machines, mixers, measuring machines, etc.) 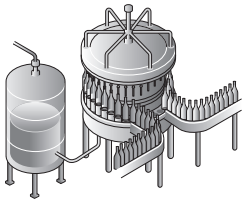	Food packaging machines 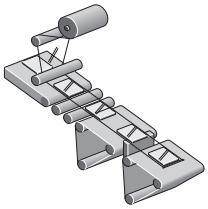	Press machines 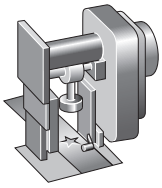

High-Response Operation by Ultra-Low Inertia Servo Motors

The product lines includes HK-MT series (small capacity, ultra-low inertia) and HK-RT series (medium capacity, ultra-low inertia). The ultra-low inertia servo motors enable a high-response operation that reduces the cycle time of an ultra-high-throughput material handling system.

Compact, High-Power Rate Servo Motors for High-Speed Operation

Medium-capacity HK-RT series 1 to 7 kW

Comparison of HG-RR (previous series) and HK-RT in 1 kW

( ): Increased torque

Servo motor model		HG-RR103	HK-RT103W	
Rated output of a combined servo amplifier	[kW]	2.0	**1.0 (2.0)**	Smaller capacity servo amplifier
Flange size	[mm]	100	**90**	Reduced flange size (by 10 %)
Rated torque	[N·m]	3.2		
Maximum torque	[N·m]	8.0	**8.0 (9.5)**	Increased torque (to 118 %)
Maximum speed	[r/min]	4500	**6700**	Increased speed (to 148 %)
Moment of inertia J	[× 10^{-4} kg·m^2]	1.50	**0.721**	Lower inertia (by 52 %)
Power rate at rated torque	[kW/s]	67.4	**141**	Increased responsivity (to 209 %)
Motor length	[mm]	145.5	**118.9**	Reduced motor length (by 26.6 mm)

Comparison of HK-KT (low inertia) and HK-RT in 2 kW

( ): Increased torque

Servo motor model		HK-KT203W	HK-RT203W	
Flange size	[mm]	90		
Rated torque	[N·m]	6.4		
Maximum torque	[N·m]	19.1 (25.5)	15.9 (19.1)	
Maximum speed	[r/min]	6000	**6700**	Increased speed (to 111 %)
Moment of inertia J	[× 10^{-4} kg·m^2]	5.65	**1.28**	Lower inertia (by 77 %)
Power rate at rated torque	[kW/s]	71.7	**317**	Increased responsivity (to 442 %)
Motor length	[mm]	136.9	172.9	

Maximum Speed of 10000 r/min

Small-capacity HK-MT series 0.05 to 1 kW

The high-power rate servo motors are optimal for packaging machines and material handling systems. Servo motors with maximum speed of 10000 r/min *1 are added to the product lines, contributing to a shorter cycle time.

*1. The high-speed type models have "V" in the model name and are equipped with an incremental encoder.

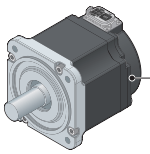

Maximum speed
Standard servo motor: 6700 r/min
High-speed servo motor: 10000 r/min *1

Servo motors for high-speed, high-accuracy, linear drive systems



Product Lines

Six series are available depending on applications.

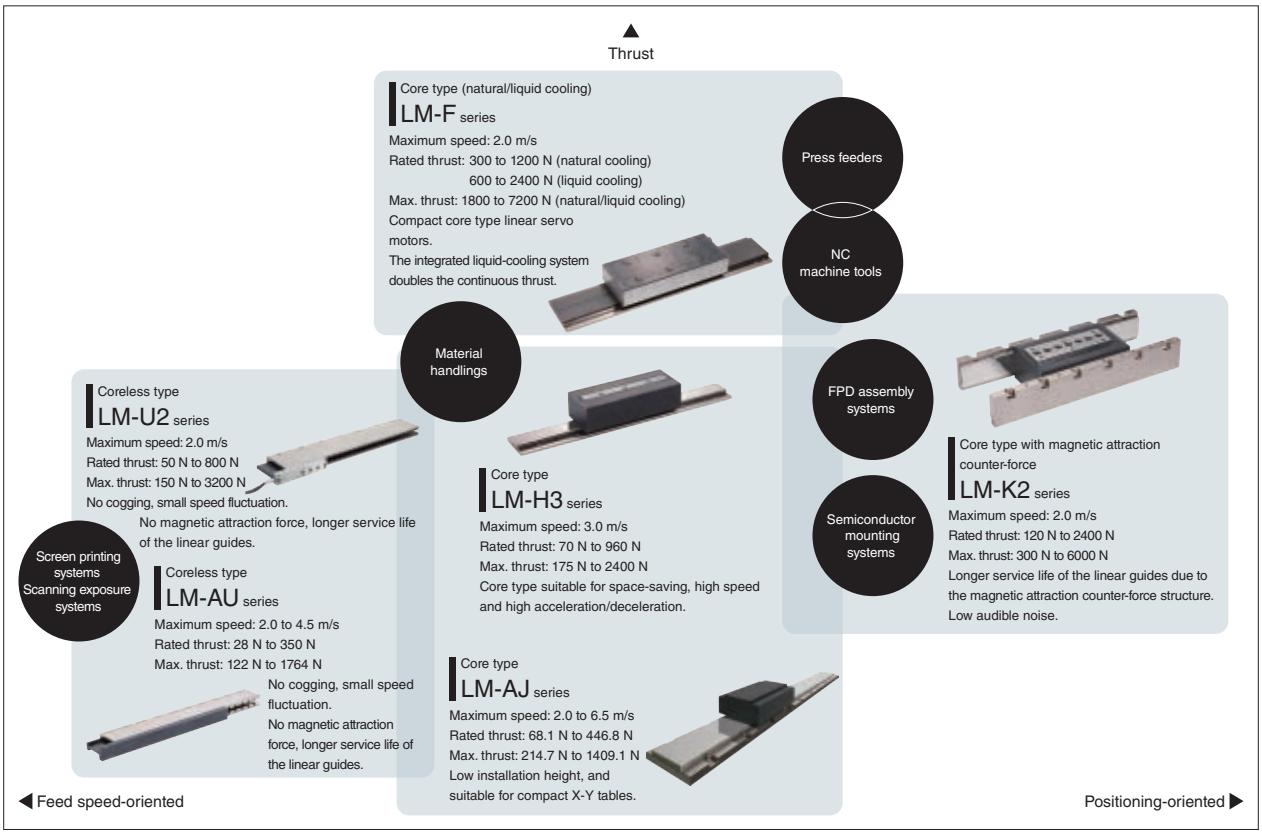

Linear Servo Motors

Basic Performance

- Maximum speed: 3.0 m/s (LM-H3 series), 6.5 m/s (LM-AJ series)
- Maximum thrust range: 122 N to 7200 N. Small size and high thrust are achieved by the increased winding density and the optimized core and magnet geometries as a result of electromagnetic field analysis.
- Six series are available: core (two series), liquid-cooling core, magnetic attraction counter-force core, and coreless (two series) types.
- The linear servo motors are compatible with a variety of serial interface linear encoders. The linear encoder resolution ranges from 1 nm and up.
- High-performance systems such as high-accuracy tandem synchronous control are achieved with CC-Link IE TSN.
- The linear servo motors feature environmental resistance, designed for an altitude of 2000 m and an ambient temperature of up to 60 °C. *1, 2

*1. Derate the speed/thrust when using the linear servo motors at an altitude exceeding 1000 m and at high ambient temperatures.
*2. LM-AJ series/LM-AU series are designed for an altitude of 1000 m and an ambient temperature of up to 40 °C.

Higher Machine Performance

For higher machine performance

- Improved productivity due to high-speed driving part.

For easier use

- The linear servo motors enable a simple and compact machine with high rigidity.
- Smooth operation and clean systems are achieved.

For flexible machine configurations

- Multi-head and tandem systems are easily configured.
- The linear servo motors are suitable for long-stroke applications.

[Offers more advantage than conventional ball screw driving systems]

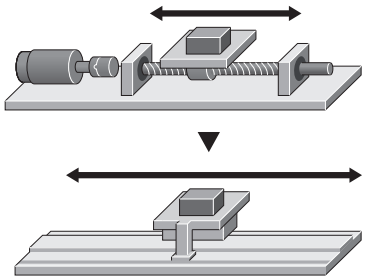

Application Examples

Optimum for a linear drive system which requires a high speed and high accuracy. Easily achieve a tandem configuration or multi-head configuration.

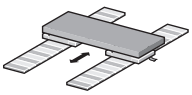

Tandem configuration

The linear servo motors configured in tandem are suitable for large systems that require highly accurate synchronous operation between two axes.

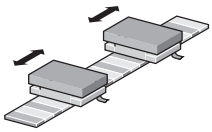

Multi-head configuration

Multi-head systems enable control of two motor coils independently, thereby simplifying machine mechanisms. This system is suitable for machines that require a short cycle time.

Machine tools XYZ stage

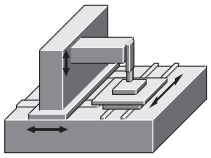

Semiconductor/FPD manufacturing systems
Electrical parts assembling/manufacturing systems

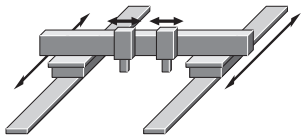

Screen printing systems and large FPD coaters

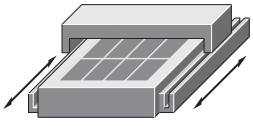

Material handling systems

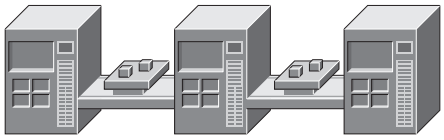

Multi-head material handling between machines

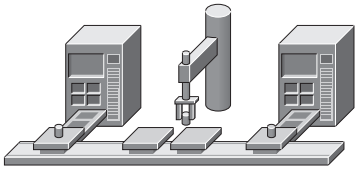

Compact and robust direct drive motors for high-accuracy applications



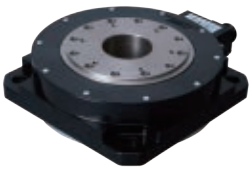

Low-profile flange type

TM-RG2M Series

Low-profile table type

TM-RU2M Series

Low-profile for space and weight saving



High-rigidity

TM-RFM Series

High torque for high-weight capacity

Product Lines

18 models with 4 different diameters are available.

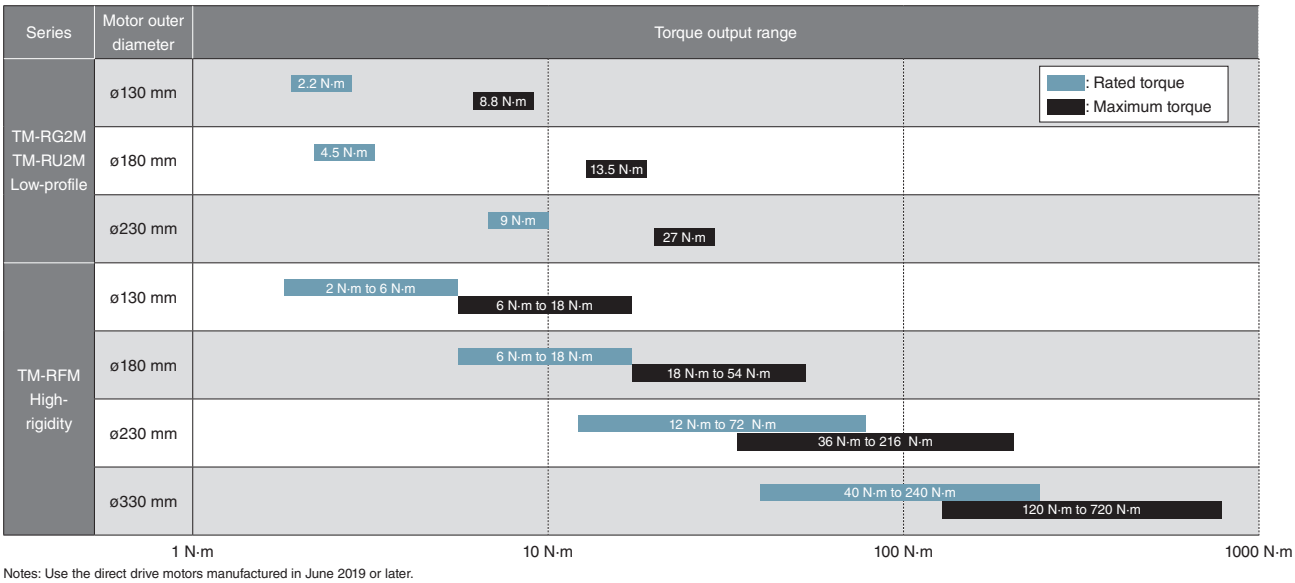

Notes: Use the direct drive motors manufactured in June 2019 or later.

Direct Drive Motors

Basic Performance

High performance with the latest technologies

Our latest magnetic design and winding technologies enable high torque density. In addition, extremely smooth rotation is achieved by the minimized torque ripple.

High-resolution absolute position encoder

The direct drive motors are equipped with a high-resolution absolute position encoder (1,000,000 to 4,000,000 pulses/rev) as standard. High-accuracy machines are achieved.

Enhanced environmental resistance

The direct drive motors feature environmental resistance, designed for an altitude of 2000 m and an ambient temperature of 60 °C. *1

*1. Derate the speed/torque when using the direct drive motors at an altitude exceeding 1000 m or at high ambient temperatures.

Compact and low-profile design

Due to high level of structural design technology, compact and low-profile design is achieved. This design enables a small mounting space and a low center of gravity.

Hollow shaft diameter range: ø20 mm to 104 mm

The motors are equipped with a large hollow shaft resulting from using bearing and encoder with large diameter. It allows cables and air tubing to pass through.

Higher Machine Performance

For higher machine performance

- Suitable for low-speed and high-torque operations.
- High-accuracy positioning is achieved because the motors are directly coupled to a load.

For easier use

- Since mechanical transmission is no longer required, no backlash and no abrasion occurs, enabling smooth operation with less audible noise, a clean system, and easy maintenance.
- Less components are required for the system.

For flexible machine configurations

- A simple, compact, and high-rigid machine is achieved.
- Machine stability is enhanced due to the low-profile design and a low center of gravity.
- The motors have an inner rotor with hollow shaft that allows cables and pipes to pass through.

[No mechanical transmission contributing to no warp or distortion]

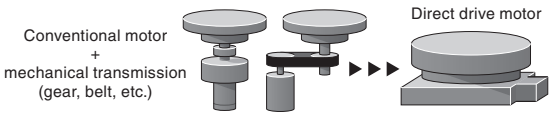

Application Examples

Suitable for low speed and high torque applications.

Coating and vapor deposition systems 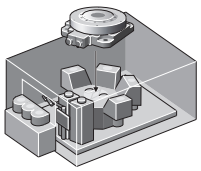	Spin-type cleaning systems for FPD/semiconductor 	FPD/semiconductor testing systems (XYθ tables) 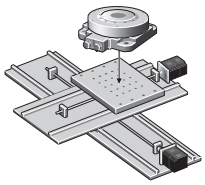
Index table for machine tools 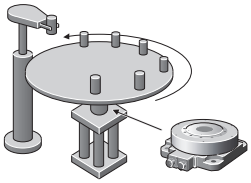	Rotary axis for polishing systems 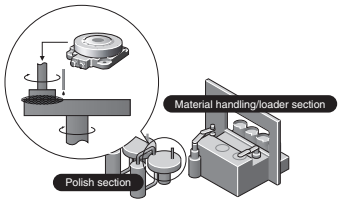	Rotary axis for material handling robots 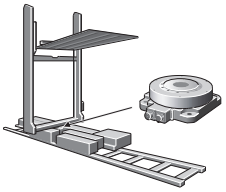

Heritage

Taking evolution to the next step by supporting SSCNET III/H



Incorporate existing manufacturing devices into your new system and benefit from reduced costs and faster construction speed.

SSCNET III/H-Compatible Servo System

- The servo amplifiers allow the user to build a system that utilizes the existing assets of the servo system controllers. Servo parameters are converted when the servo amplifier is changed on the engineering software.
- MELSEC iQ-R series Motion controllers are equipped with servo system recorder, helping to locate the cause when trouble arises.

Utilizing MELSERVO-J5 Series Functions

- The servo amplifiers support functions of MELSERVO-J5 series such as quick tuning, machine diagnosis, and flexible combinations of the servo amplifiers and the servo motors.
- Servo motors with a batteryless absolute position encoder can be operated.

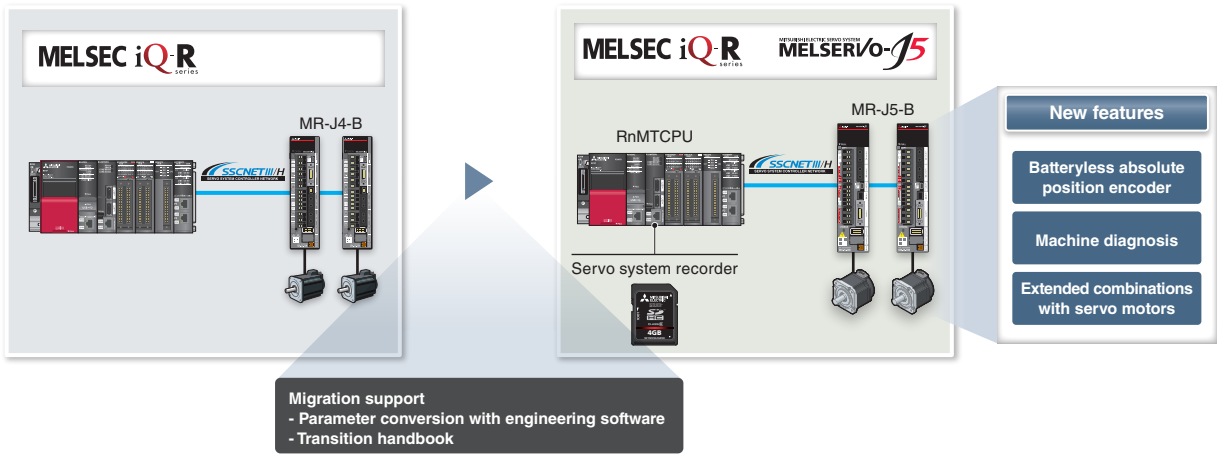

Corrective Maintenance

Servo System Recorder

RnMTCPU

The Motion controller automatically collects data of all servo amplifiers when an error occurs. The collected data, such as the command and the feedback values, greatly helps you analyze the error cause.

- Automatic collection of servo system data, such as the command and feedback values, without programming
- Data collection of all axes, which helps you locate the error cause even when the error is caused by the other axes without an error
- The co-recording function collects data even when an error occurs in other recording devices.

[Data collection]

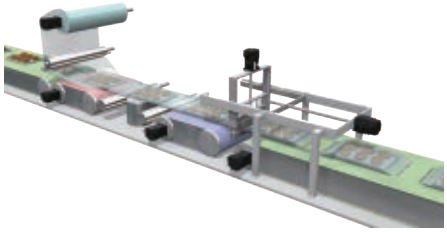

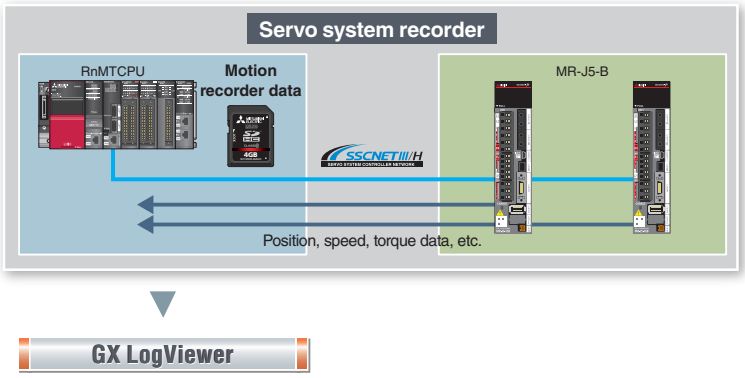

GX LogViewer

The collected data can be checked on GX LogViewer.
The operation status before and after an error is displayed in waveforms, which allows more detailed analysis and identification of the error cause.

[Features]

- Displays the collected data and events graphically.
- Enables users to adjust a graph easily by automatic adjustment function and drag operation.

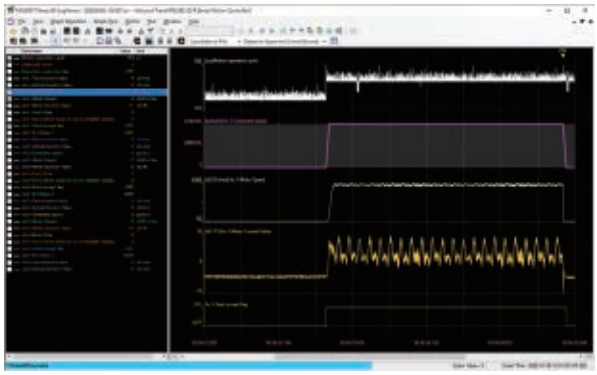

Analyzing Data

Analyzing operation transition of the Motion controllers and the servo amplifiers before and after an error helps you locate the error cause.

[Example]

1. An error has occurred.
2. The speed and torque decreased even though the command position was increasing.

By analyzing the data in the recorder (1 and 2 above), users can find out a possible cause of the error, such as a disconnection of a power cable during operation.

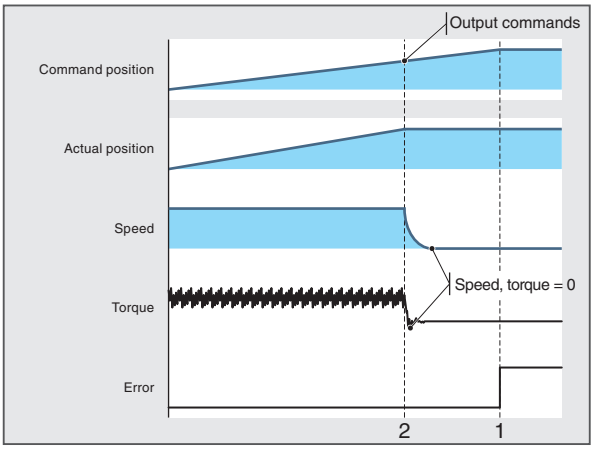

SSCNET III/H-Compatible Servo System Controller

MELSEC-Q Series Simple Motion Module QD77MS

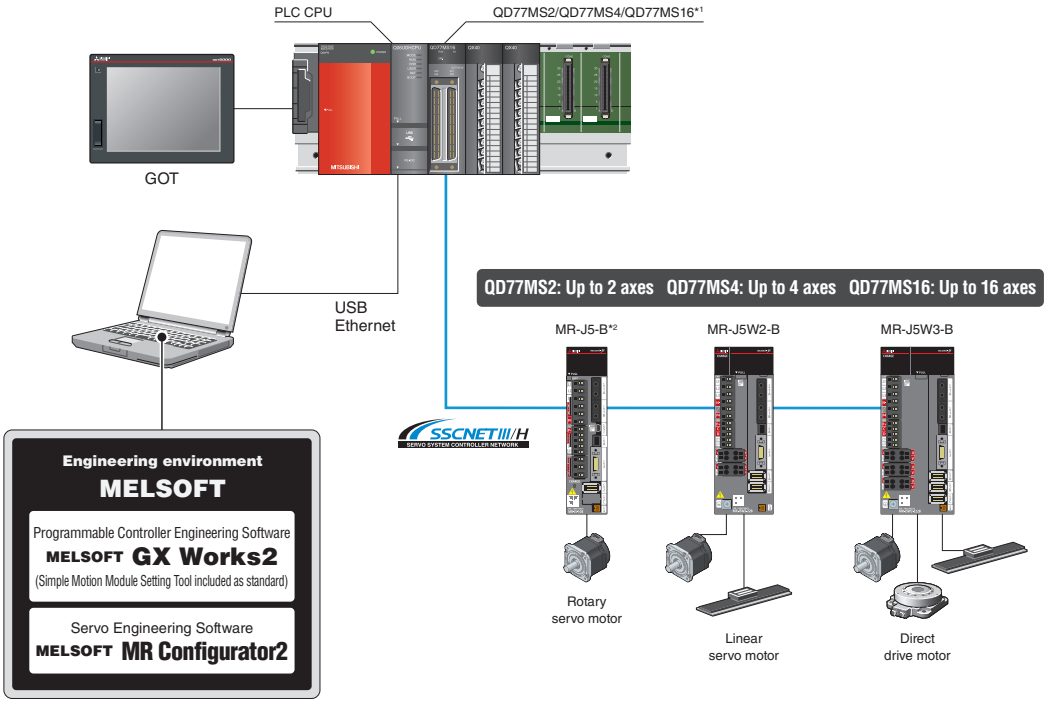

*1. For control that requires high-accuracy synchronization of multiple axes at load side, such as interpolation and synchronous control, configure a system using the same series servo amplifiers.
*2. When an MR-J5-B is used for the driver communication function, use MR-J5-B for all of the master and following axes to be combined.

[Reusing existing programs]

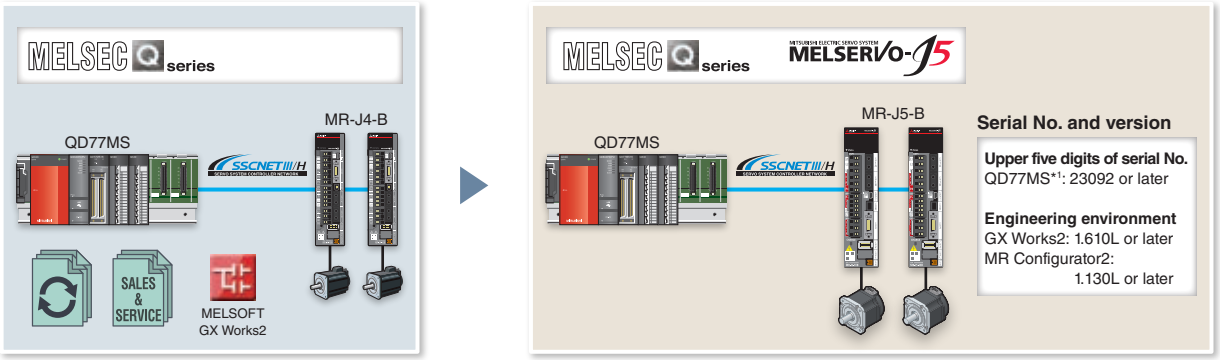

*1. The firmware cannot be updated. Use a module with the above serial No.

Transition from MELSERVO-J4 Series to J5 Series Handbook

- The handbook explains the procedures for migrating an SSCNET III/H system with MR-J4-B to MR-J5-B.
- The handbook describes items necessary to be changed at migration and restrictions for when different series are mixed.

Addition of Combinations of HG Series Servo Motors and MR-J5 Series AC Servo Amplifiers

New functions of the MR-J5 servo amplifier can be used without replacing the existing servo motors used with the MR-J4 servo amplifier, improving the performance and functions of the system. Contact your local sales office for details.

Model Change from MELSERVO-J4 Series to MELSERVO-J5 Series

MELSOFT GX Works2

- Servo parameters are converted when the servo amplifier is changed.
- The parameters that are read and changed by the program will not be changed. Review those parameters.

MELSEC-Q Series Motion Controller Q172DSCPU/Q173DSCPU/Q170MSCPU

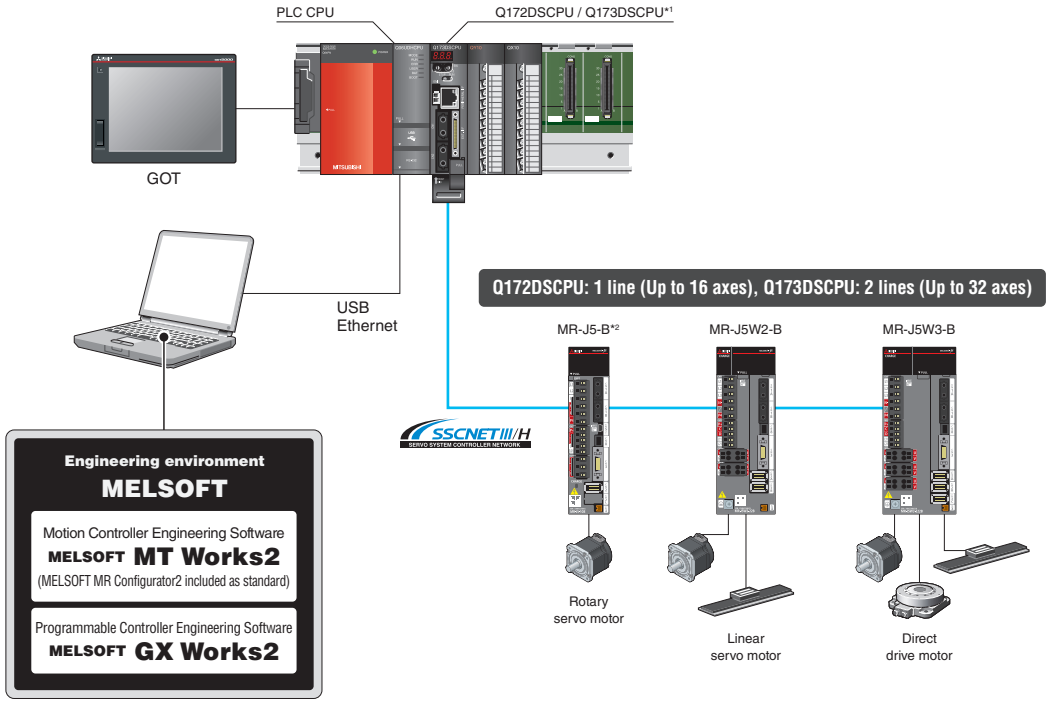

*1. For control that requires high-accuracy synchronization of multiple axes at load side, such as interpolation and synchronous control, configure a system using the same series servo amplifiers.
*2. When an MR-J5-B is used for the driver communication function, use MR-J5-B for all of the master and following axes to be combined.

[Reusing existing programs]

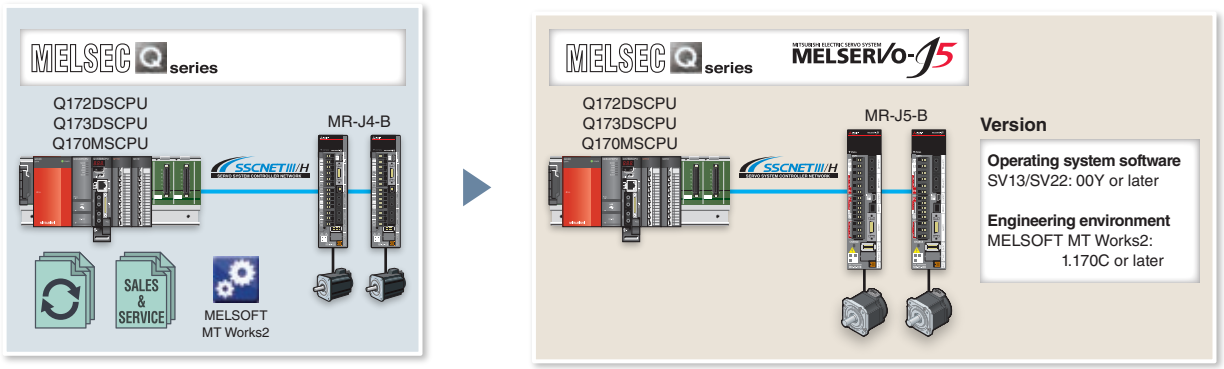



Transition from MELSERVO-J4 Series to J5 Series Handbook

- The handbook explains the procedures for migrating an SSCNET III/H system with MR-J4-B to MR-J5-B.
- The handbook describes items necessary to be changed at migration and restrictions for when different series are mixed.



Addition of Combinations of HG Series Servo Motors and MR-J5 Series AC Servo Amplifiers

New functions of the MR-J5 servo amplifier can be used without replacing the existing servo motors used with the MR-J4 servo amplifier, improving the performance and functions of the system. Contact your local sales office for details.



MELSOFT MT Works2

Model Change from MELSERVO-J4 Series to MELSERVO-J5 Series

- Servo parameters are converted when the servo amplifier is changed.
- The parameters that are read and changed by the program will not be changed. Review those parameters.

MELSEC iQ-R Series Simple Motion Module RD77MS

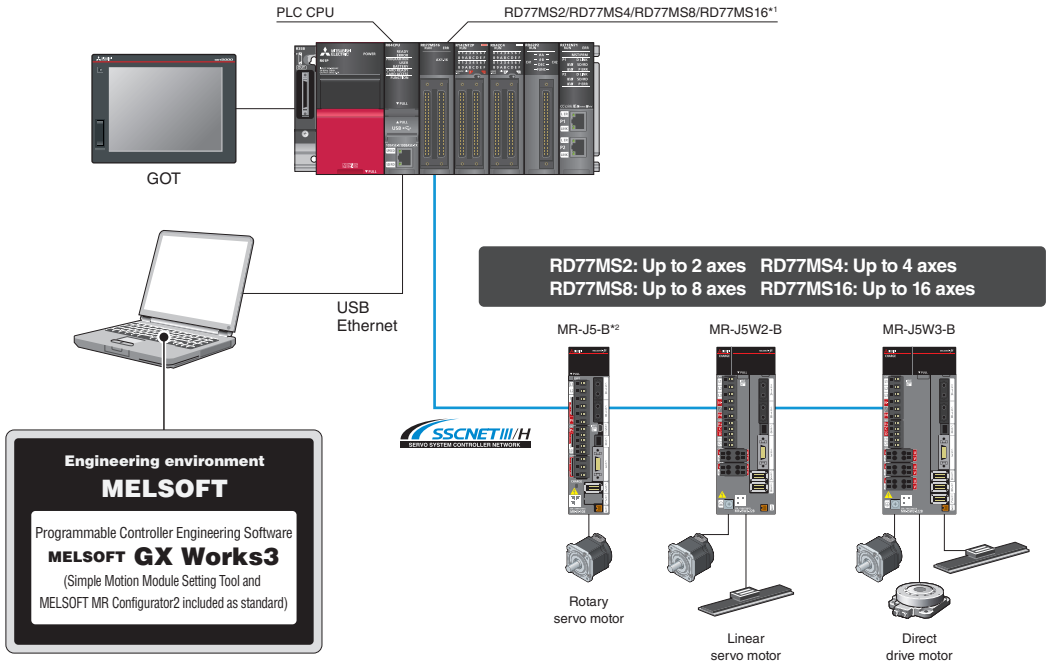

*1. For control that requires high-accuracy synchronization of multiple axes at load side, such as interpolation and synchronous control, configure a system using the same series servo amplifiers.
*2. When an MR-J5-B is used for the driver communication function, use MR-J5-B for all of the master and following axes to be combined.

[Reusing existing programs]

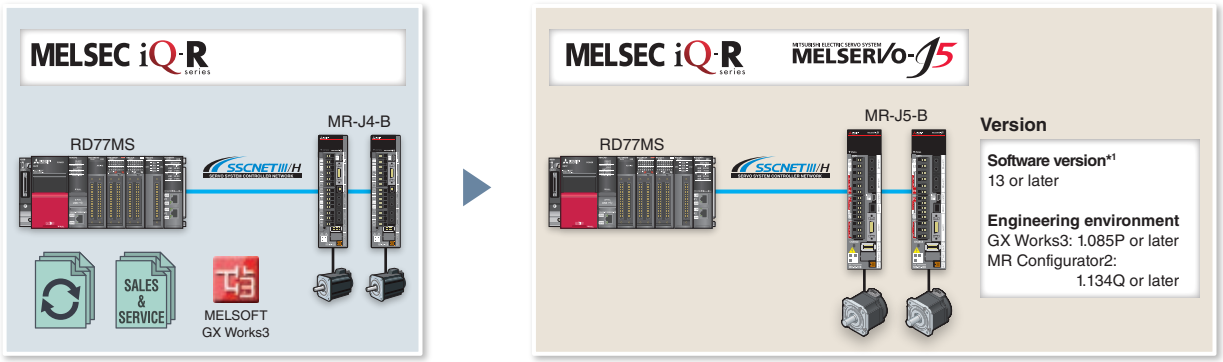

*1. The firmware cannot be updated. Use a module with the above software version.

Transition from MELSERVO-J4 Series to J5 Series Handbook

- The handbook explains the procedures for migrating an SSCNET III/H system with MR-J4-B to MR-J5-B.
- The handbook describes items necessary to be changed at migration and restrictions for when different series are mixed.

Addition of Combinations of HG Series Servo Motors and MR-J5 Series AC Servo Amplifiers

New functions of the MR-J5 servo amplifier can be used without replacing the existing servo motors used with the MR-J4 servo amplifier, improving the performance and functions of the system. Contact your local sales office for details.

Model Change from MELSERVO-J4 Series to MELSERVO-J5 Series

MELSOFT GX Works3

- Servo parameters are converted when the servo amplifier is changed.
- The parameters that are read and changed by the program will not be changed. Review those parameters.

MELSEC iQ-R Series Motion Controller R16MTCPU/R32MTCPU/R64MTCPU

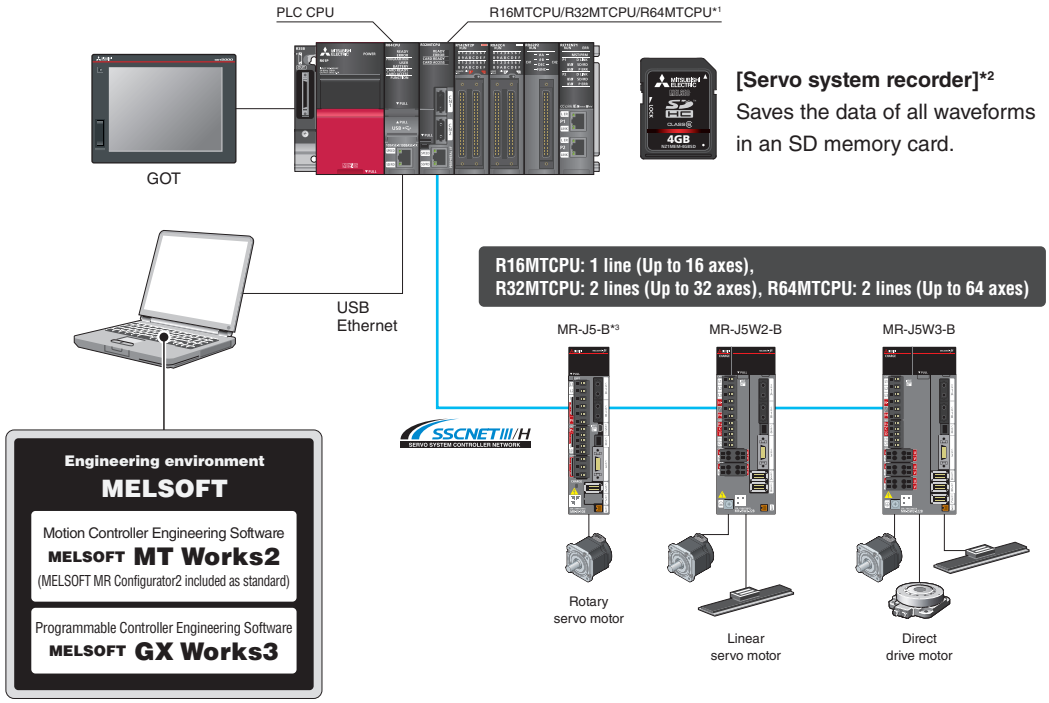

*1. For control that requires high-accuracy synchronization of multiple axes at load side, such as interpolation and synchronous control, configure a system using the same series servo amplifiers.
*2. To use the servo system recorder and digital oscilloscope function simultaneously, use a Motion controller shipped in July 2022 or later.
*3. When an MR-J5-B is used for the driver communication function, use MR-J5-B for all of the master and following axes to be combined.

[Reusing existing programs]

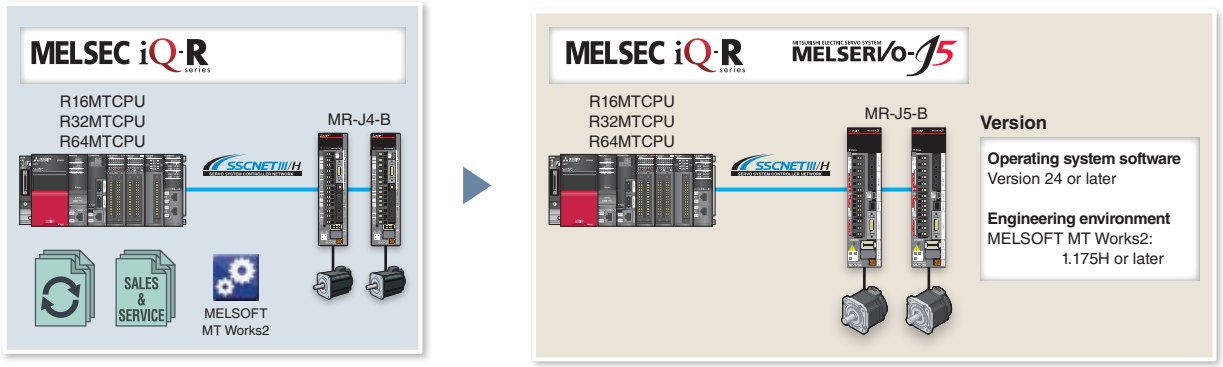

Transition from MELSERVO-J4 Series to J5 Series Handbook

- The handbook explains the procedures for migrating an SSCNET III/H system with MR-J4-B to MR-J5-B.
- The handbook describes items necessary to be changed at migration and restrictions for when different series are mixed.

Addition of Combinations of HG Series Servo Motors and MR-J5 Series AC Servo Amplifiers

New functions of the MR-J5 servo amplifier can be used without replacing the existing servo motors used with the MR-J4 servo amplifier, improving the performance and functions of the system. Contact your local sales office for details.

MELSOFT MT Works2

Model Change from MELSERVO-J4 Series to MELSERVO-J5 Series

- Servo parameters are converted when the servo amplifier is changed.
- The parameters that are read and changed by the program will not be changed. Review those parameters.

FUTURE MANUFACTURING

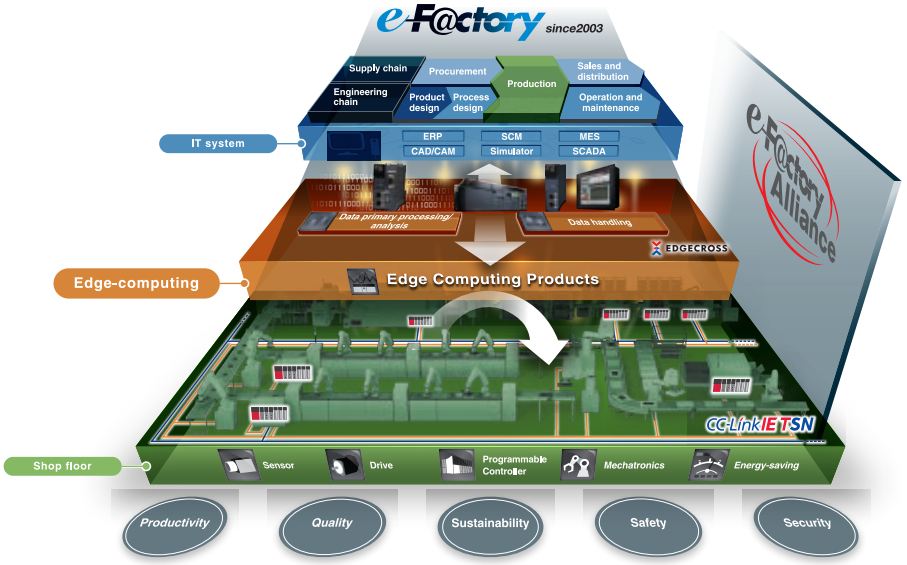

The Future of Manufacturing as envisioned by Mitsubishi Electric, e-F@ctory: “Manufacturing” that evolves in response to environmental changes in an IoT enabled world.

Established In 2003, e-F@ctory created a Kaizen#1 automation methodology to help optimize and manage the increasingly complex business of “manufacturing”.
Continuously evolving itself, it also utilizes the expanded reach of IT, which has brought “cyber world” benefits of analysis, simulation and virtual engineering, and yet has also placed greater demands on the “physical” world for increased data sensing, collection and communication.
The continued success of e-F@ctory comes from understanding that each manufacturer has individual needs and investment plans but must still deliver; "Reduced management costs” (TCO); production flexibility to make a multitude of product in varying quantities; continuously enhanced quality. In short e-F@ctory’s goal is to deliver operational performance that is "a step ahead of the times", while enabling manufacturing to evolve in response to its environment. To do this it is supported by three key elements:

- The e-F@ctory Alliance Partners; who bring a wide range of software, devices, and system integration skills that enable the creation of the optimal e-F@ctory architecture.

- Advanced communication; utilizing open network technology like CC-Link IE, and communication middleware such as OPC, to open the door to device data, including legacy systems, while supporting high speed extraction.

- Platform thinking; to reduce the number of complex interfaces making it easier to bring together Robotics, Motion, Open programming languages (C language), PACs etc. strengthening the field of control, yet operating on industrial strength hardware.

e-F@ctory Alliance

e-F@ctory

Kaizen#1 = continuous improvement
TCO = Total Cost of Ownership

Mitsubishi Electric Partners

e-F@ctory Alliance

The e-F@ctory Alliance is a FA manufacturer partnering program that strongly links the connection compatibility of Mitsubishi Electric FA equipment utilizing excellent software and machinery offered by partners, thereby enabling systems to be built by systems integration partners and the proposal of optimal solutions to customers.



Mitsubishi Electric Servo System Partners

Servo system includes controllers, servo drivers, actuators, sensors, etc. The servo system takes a step further to accelerate the equipment revolution by collaborating with our partner companies. Now that a wide variety of partner products are available such as stepping motors, pressure-resistance, explosion-proof type motors, linear encoders, your system will be configured flexibly.
The Mitsubishi Electric Servo System Partner Association is a subcommittee of e-F@ctory Alliance.
Partner product lines supporting CC-Link IE TSN and MELSERVO-J5 have been and will continue to be expanded sequentially.

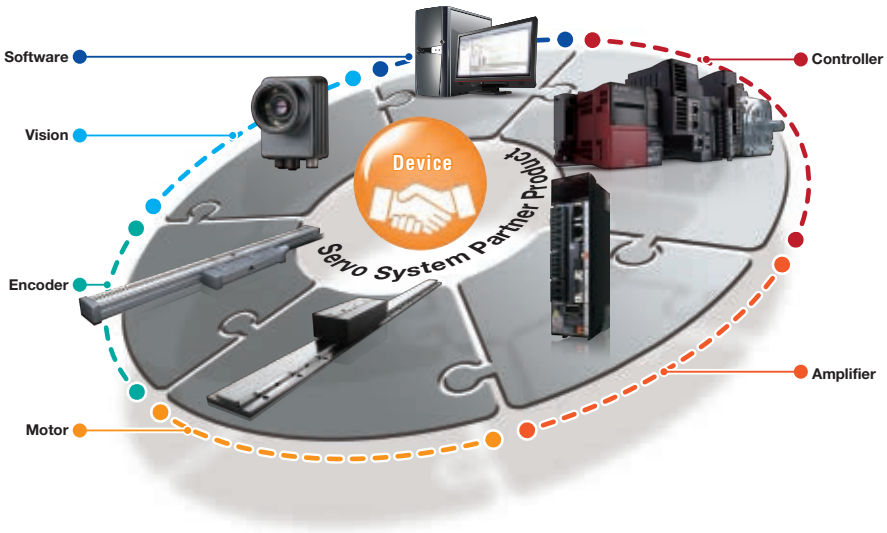

Mitsubishi Electric FA Global Website

Mitsubishi Electric Factory Automation provides a mix of services to support its customers worldwide, through a consolidated global website. It offers a selection of support tools and a window to its local Mitsubishi Electric sales and support network.

Global & Local Websites

Mitsubishi Electric Factory Automation
Global website
www.MitsubishiElectric.com/fa

Worldwide

[Local websites]

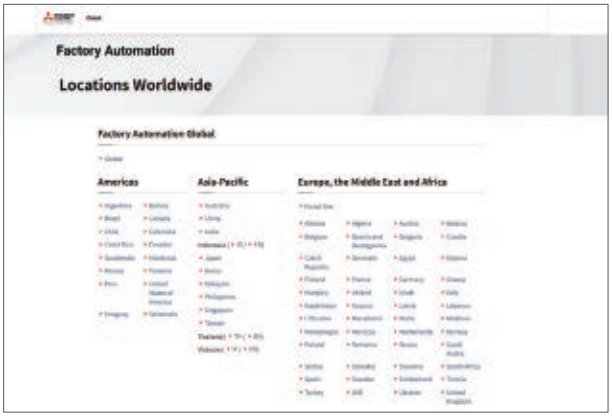

[Global website]



e-Manual

Instruction manuals are available in e-Manual format.

- Use the e-Manual application on tablets
- Download and update manuals quickly and easily
- Search for desired information across multiple manuals

Download on the App Store

GET IT ON Google Play

FA Integrated Selection Tool

FA Integrated Selection Tool is now available, so you can select options such as encoder cables and power cables which are required to use with controllers, servo motors, servo amplifiers, and regenerative options of your choice.



FA Integrated Selection Tool

1 Common Specifications

Combinations of Rotary Servo Motors and Servo Amplifiers 1-2

Combinations of Rotary Servo Motors and Drive Units 1-6

Combinations of Geared Servo Motors and Servo Amplifiers or Drive Units 1-7

Combinations of Linear Servo Motors and Servo Amplifiers 1-8

Combinations of Direct Drive Motors and Servo Amplifiers 1-10

Safety Sub-Functions 1-11

Environment 1-14

* Refer to p. 7-90 in this catalog for conversion of units.

Combinations of Rotary Servo Motors and Servo Amplifiers (Note 1, 2)

The torque can be increased by combining a large-capacity servo amplifier.
The torque characteristics vary by the combinations. Refer to the list of the specifications of each rotary servo motor.

1-axis servo amplifier (200 V)

○: Standard torque ◎: Torque increased

Rotary servo motor (Note 2)			Servo amplifier MR-J5- (200 V)							
			10G/B/A	20G/B/A	40G/B/A	60G/B/A	70G/B/A	100G/B/A	200G/B/A	350G/B/A
HK-KT_W	40 × 40	HK-KT053W	○	◎	◎	-	-	-	-	-
		HK-KT13W	○	◎	◎	-	-	-	-	-
		HK-KT1M3W	-	○	◎	◎	-	-	-	-
	60 × 60	HK-KT13UW	○	◎	◎	-	-	-	-	-
		HK-KT23W	-	○	◎	◎	-	-	-	-
		HK-KT43W	-	-	○	○	◎	-	-	-
		HK-KT63W	-	-	-	-	○	○	◎	-
	80 × 80	HK-KT23UW	-	○	◎	◎	-	-	-	-
		HK-KT43UW	-	-	○	○	◎	-	-	-
		HK-KT7M3W	-	-	-	-	○	○	◎	-
		HK-KT103W	-	-	-	-	-	○	◎	◎
	90 × 90	HK-KT63UW	-	-	-	○	◎	◎	-	-
		HK-KT7M3UW	-	-	-	-	○	○	◎	-
		HK-KT103UW	-	-	-	-	-	○	◎	◎
		HK-KT153W	-	-	-	-	-	-	○	◎
		HK-KT203W	-	-	-	-	-	-	○	◎
		HK-KT202W	-	-	-	-	-	-	○	◎
HK-KT_4_W	60 × 60	HK-KT434W	-	○	◎	◎	-	-	-	-
		HK-KT634W	-	-	○	○	◎	-	-	-
	80 × 80	HK-KT7M34W	-	-	○	○	◎	-	-	-
		HK-KT1034W	-	-	-	○	◎	◎	-	-
	90 × 90	HK-KT1534W	-	-	-	-	○	○	◎	-
		HK-KT2034W	-	-	-	-	-	○	◎	◎
		HK-KT2024W	-	-	-	-	-	○	○	○
HK-MT_W (Note 3)	40 × 40	HK-MT053W	○	◎	◎	-	-	-	-	-
		HK-MT13W	○	◎	◎	-	-	-	-	-
		HK-MT1M3W	-	○	◎	-	-	-	-	-
	60 × 60	HK-MT23W	-	○	◎	-	-	-	-	-
		HK-MT43W	-	-	○	-	◎	-	-	-
		HK-MT63W	-	-	-	-	○	-	◎	-
	80 × 80	HK-MT7M3W	-	-	-	-	○	-	◎	-
		HK-MT103W	-	-	-	-	-	○	◎	-
HK-MT_VW (Note 3)	40 × 40	HK-MT053VW	○	◎	◎	-	-	-	-	-
		HK-MT13VW	○	◎	◎	-	-	-	-	-
		HK-MT1M3VW	-	○	◎	-	-	-	-	-
	60 × 60	HK-MT23VW	-	○	◎	-	-	-	-	-
		HK-MT43VW	-	-	-	○	◎	-	-	-
		HK-MT63VW	-	-	-	-	○	-	◎	-
	80 × 80	HK-MT7M3VW	-	-	-	-	○	-	◎	-
		HK-MT103VW	-	-	-	-	-	-	○	◎

Notes: 1. The combinations of servo motors and servo amplifiers with special specifications are the same as those of standard servo amplifiers. Refer to the servo amplifiers with the same rated output.
2. The combinations of servo amplifiers and servo motors with an electromagnetic brake or servo motors with functional safety are the same as those described in this table. Refer to "Combinations of Geared Servo Motors and Servo Amplifiers or Drive Units" for the combinations of geared servo motors and servo amplifiers.
3. Use the servo amplifiers with firmware version C2 or later. If the servo amplifiers with the previous firmware version are connected, an alarm occurs.

Combinations of Rotary Servo Motors and Servo Amplifiers (Note 1, 2)

The torque can be increased by combining a large-capacity servo amplifier.
The torque characteristics vary by the combinations. Refer to the list of the specifications of each rotary servo motor.

1-axis servo amplifier (200 V)

○: Standard torque ◎: Torque increased

Rotary servo motor (Note 2)			Servo amplifier MR-J5- (200 V)										
			40 G/B/A	60 G/B/A	70 G/B/A	100 G/B/A	200 G/B/A	350 G/B/A	500 G/B/A	700 G/B/A	12 KG/B/A	17 KG/B/A	25 KG/B/A
HK-ST_W	130 × 130	HK-ST52W	-	○	◎	◎	-	-	-	-	-	-	-
		HK-ST102W	-	-	-	○	◎	◎	-	-	-	-	-
		HK-ST172W	-	-	-	-	○	○	-	-	-	-	-
		HK-ST202AW	-	-	-	-	○	◎	-	-	-	-	-
		HK-ST302W	-	-	-	-	-	○	◎ (Note 4)	-	-	-	-
		HK-ST353W	-	-	-	-	-	○	◎	-	-	-	-
		HK-ST503W	-	-	-	-	-	-	○	◎	-	-	-
	176 × 176	HK-ST7M2UW	-	-	○	○	◎	-	-	-	-	-	-
		HK-ST172UW	-	-	-	-	○	◎	-	-	-	-	-
		HK-ST202W	-	-	-	-	○	◎	-	-	-	-	-
		HK-ST352W	-	-	-	-	-	○	◎ (Note 4)	-	-	-	-
		HK-ST502W	-	-	-	-	-	-	○	◎	-	-	-
		HK-ST702W	-	-	-	-	-	-	-	○	-	-	-
HK-ST_4_W	130 × 130	HK-ST524W	○	○	○	-	-	-	-	-	-	-	-
		HK-ST1024W	-	○	◎	◎	-	-	-	-	-	-	-
		HK-ST1724W	-	-	-	○	○	○	-	-	-	-	-
		HK-ST2024AW	-	-	-	○	○	○	-	-	-	-	-
		HK-ST3024W	-	-	-	-	○	○	-	-	-	-	-
	176 × 176	HK-ST2024W	-	-	-	-	○	○	-	-	-	-	-
		HK-ST3524W	-	-	-	-	○	◎	-	-	-	-	-
		HK-ST5024W	-	-	-	-	-	○	○ (Note 4)	-	-	-	-
		HK-ST7024W	-	-	-	-	-	-	○	○	-	-	-
HK-RT_W	90 × 90	HK-RT103W	-	-	-	○ (Note 3)	◎	-	-	-	-	-	-
		HK-RT153W	-	-	-	-	○	-	◎	-	-	-	-
		HK-RT203W	-	-	-	-	○	◎	-	-	-	-	-
	130 × 130	HK-RT353W	-	-	-	-	-	○	◎	-	-	-	-
		HK-RT503W	-	-	-	-	-	-	○	◎	-	-	-
		HK-RT703W	-	-	-	-	-	-	-	○	-	-	-
HK-JT_J	220 × 220	HK-JT701MJ	-	-	-	-	-	-	-	○	-	-	-
		HK-JT11K1MJ	-	-	-	-	-	-	-	-	○	-	-
		HK-JT15K1MJ	-	-	-	-	-	-	-	-	-	○	-
	250 × 250	HK-JT15K1J	-	-	-	-	-	-	-	-	-	○	-
		HK-JT22K1MJ	-	-	-	-	-	-	-	-	-	-	○

Notes: 1. The combinations of servo motors and servo amplifiers with special specifications are the same as those of standard servo amplifiers. Refer to the servo amplifiers with the same rated output.
2. The combinations of servo amplifiers and servo motors with an electromagnetic brake or servo motors with functional safety are the same as those described in this table. Refer to "Combinations of Geared Servo Motors and Servo Amplifiers or Drive Units" for the combinations of geared servo motors and servo amplifiers.
3. The dynamic brake time constant is longer than that of when the previous HG-RR103 and MR-J4-200_ are combined. When the time constant equivalent to that of the previous series is required, combine HK-RT103W and MR-J5-200_. Refer to "MR-J5 User's Manual" for how to calculate the coasting distance.
4. Use the rotary servo motors manufactured in December 2020 or later. If the rotary servo motors manufactured before that date are connected, an alarm occurs. Refer to "Rotary Servo Motor User's Manual (For MR-J5)" for how to check the date of manufacture.

Combinations of Rotary Servo Motors and Servo Amplifiers (Note 1, 2)

The torque can be increased by combining a large-capacity servo amplifier.
The torque characteristics vary by the combinations. Refer to the list of the specifications of each rotary servo motor.

1-axis servo amplifier (400 V)

○: Standard torque ◎: Torque increased

Rotary servo motor (Note 2)			Servo amplifier MR-J5- (400 V)								
			60 G4/B4/A4	100 G4/B4/A4	200 G4/B4/A4	350 G4/B4/A4	500 G4/B4/A4	700 G4/B4/A4	12 KG4/B4/A4	17 KG4/B4/A4	25 KG4/B4/A4
HK-KT_W	40 × 40	HK-KT053W	○ (Note 3)	◎ (Note 3)	-	-	-	-	-	-	-
		HK-KT13W	○ (Note 3)	◎ (Note 3)	-	-	-	-	-	-	-
		HK-KT1M3W	○ (Note 3)	◎ (Note 3)	-	-	-	-	-	-	-
HK-KT_4_W	60 × 60	HK-KT434W	○ (Note 3)	◎ (Note 3)	◎ (Note 3)	-	-	-	-	-	-
		HK-KT634W	-	○ (Note 3)	◎ (Note 3)	◎ (Note 3)	-	-	-	-	-
	80 × 80	HK-KT7M34W	-	○ (Note 3)	◎ (Note 3)	◎ (Note 3)	-	-	-	-	-
		HK-KT1034W	-	○ (Note 3)	◎ (Note 3)	◎ (Note 3)	-	-	-	-	-
	90 × 90	HK-KT634UW	○	◎	◎	-	-	-	-	-	-
		HK-KT1034UW	-	○	◎	◎	-	-	-	-	-
		HK-KT1534W	-	-	○ (Note 3)	◎ (Note 3)	-	-	-	-	-
		HK-KT2034W	-	-	○ (Note 3)	◎ (Note 3)	-	-	-	-	-
		HK-KT2024W	-	-	○ (Note 3)	◎ (Note 3)	-	-	-	-	-
HK-ST_4_W	130 × 130	HK-ST524W	○ (Note 4)	◎ (Note 4)	◎ (Note 4)	-	-	-	-	-	-
		HK-ST1024W	-	○ (Note 4)	◎ (Note 4)	◎ (Note 4)	-	-	-	-	-
		HK-ST1724W	-	-	○ (Note 4)	○ (Note 4)	○ (Note 5)	-	-	-	-
		HK-ST2024AW	-	-	○ (Note 4)	◎ (Note 4)	◎ (Note 5)	-	-	-	-
		HK-ST3024W	-	-	-	○ (Note 4)	◎ (Note 5)	◎ (Note 5)	-	-	-
		HK-ST3534W	-	-	-	○	◎	-	-	-	-
		HK-ST5034W	-	-	-	-	○	◎	-	-	-
	176 × 176	HK-ST2024W	-	-	○ (Note 4)	◎ (Note 4)	◎ (Note 5)	-	-	-	-
		HK-ST3524W	-	-	-	○ (Note 4)	◎ (Note 5)	◎ (Note 5)	-	-	-
		HK-ST5024W	-	-	-	-	○ (Note 5)	◎ (Note 5)	-	-	-
		HK-ST7024W	-	-	-	-	-	○ (Note 5)	-	-	-
HK-RT_4W	90 × 90	HK-RT1034W	-	○	◎	-	-	-	-	-	-
		HK-RT1534W	-	-	○	-	◎	-	-	-	-
		HK-RT2034W	-	-	○	◎	-	-	-	-	-
	130 × 130	HK-RT3534W	-	-	-	○	◎	-	-	-	-
		HK-RT5034W	-	-	-	-	○	◎	-	-	-
		HK-RT7034W	-	-	-	-	-	○	-	-	-
HK-JT_4J	220 × 220	HK-JT701M4J	-	-	-	-	-	○	-	-	-
		HK-JT11K1M4J	-	-	-	-	-	-	○	-	-
	250 × 250	HK-JT15K1M4J	-	-	-	-	-	-	-	○	-
		HK-JT22K1M4J	-	-	-	-	-	-	-	-	○

Notes: 1. The combinations of servo motors and servo amplifiers with special specifications are the same as those of standard servo amplifiers. Refer to the servo amplifiers with the same rated output.
2. The combinations of servo amplifiers and servo motors with an electromagnetic brake or servo motors with functional safety are the same as those described in this table. Refer to "Combinations of Geared Servo Motors and Servo Amplifiers or Drive Units" for the combinations of geared servo motors and servo amplifiers.
3. Use the rotary servo motors manufactured in September 2020 or later. If the rotary servo motors manufactured before that date are connected, an alarm occurs. Refer to "Rotary Servo Motor User's Manual (For MR-J5)" for how to check the date of manufacture.
4. Use the rotary servo motors manufactured in December 2020 or later. If the rotary servo motors manufactured before that date are connected, an alarm occurs. Refer to "Rotary Servo Motor User's Manual (For MR-J5)" for how to check the date of manufacture.
5. Use the rotary servo motors manufactured in April 2021 or later. If the rotary servo motors manufactured before that date are connected, an alarm occurs. Refer to "Rotary Servo Motor User's Manual (For MR-J5)" for how to check the date of manufacture.

Combinations of Rotary Servo Motors and Servo Amplifiers (Note 1, 2)

The torque can be increased by combining a large-capacity servo amplifier.
The torque characteristics vary by the combinations. Refer to the list of the specifications of each rotary servo motor.
Any combination of the rotary servo motors, the linear servo motors, and the direct drive motors with different series and capacities is possible as long as the servo motors are compatible with the servo amplifier.

Multi-axis servo amplifier (200 V)

○: Standard torque ◎: Torque increased

Rotary servo motor (Note 2)			Servo amplifier MR-J5W2-				Servo amplifier MR-J5W3-	
			22G/B	44G/B	77G/B	1010G/B	222G/B	444G/B
HK-KT_W	40 × 40	HK-KT053W	◎	◎	-	-	◎	◎
		HK-KT13W	◎	◎	-	-	◎	◎
		HK-KT1M3W	○	◎	-	-	○	◎
	60 × 60	HK-KT13UW	◎	◎	-	-	◎	◎
		HK-KT23W	○	◎	-	-	○	◎
		HK-KT43W	-	○	◎	◎	-	○
		HK-KT63W	-	-	○	○	-	-
	80 × 80	HK-KT23UW	○	◎	-	-	○	◎
		HK-KT43UW	-	○	◎	◎	-	○
		HK-KT7M3W	-	-	○	○	-	-
		HK-KT103W	-	-	-	○	-	-
	90 × 90	HK-KT63UW	-	-	◎	◎	-	-
		HK-KT7M3UW	-	-	○	○	-	-
		HK-KT103UW	-	-	-	○	-	-
HK-KT_4_W	60 × 60	HK-KT434W	○	◎	-	-	○	◎
		HK-KT634W	-	○	◎	◎	-	○
	80 × 80	HK-KT7M34W	-	○	◎	◎	-	○
		HK-KT1034W	-	-	◎	◎	-	-
	90 × 90	HK-KT1534W	-	-	○	○	-	-
		HK-KT2034W	-	-	-	○	-	-
		HK-KT2024W	-	-	-	○	-	-
HK-MT_W (Note 3)	40 × 40	HK-MT053W	◎	◎	-	-	◎	◎
		HK-MT13W	◎	◎	-	-	◎	◎
		HK-MT1M3W	○	◎	-	-	○	◎
	60 × 60	HK-MT23W	○	◎	-	-	○	◎
		HK-MT43W	-	○	◎	◎	-	○
		HK-MT63W	-	-	○	○	-	-
	80 × 80	HK-MT7M3W	-	-	○	○	-	-
		HK-MT103W	-	-	-	○	-	-
HK-MT_VW (Note 3)	40 × 40	HK-MT053VW	◎	◎	-	-	◎	◎
		HK-MT13VW	◎	◎	-	-	◎	◎
		HK-MT1M3VW	○	◎	-	-	○	◎
	60 × 60	HK-MT23VW	○	◎	-	-	○	◎
		HK-MT43VW	-	-	◎	◎	-	-
		HK-MT63VW	-	-	○	○	-	-
	80 × 80	HK-MT7M3VW	-	-	○	○	-	-
HK-ST_W	130 × 130	HK-ST52W	-	-	◎	◎	-	-
		HK-ST102W	-	-	-	○	-	-
	176 × 176	HK-ST7M2UW	-	-	○	○	-	-
HK-ST_4_W	130 × 130	HK-ST524W	-	○	○	-	-	○
		HK-ST1024W	-	-	◎	◎	-	-
		HK-ST1724W	-	-	-	○	-	-
		HK-ST2024AW	-	-	-	○	-	-
HK-RT_W	90 × 90	HK-RT103W	-	-	-	○	-	-

Notes: 1. The combinations of servo motors and servo amplifiers with special specifications are the same as those of standard servo amplifiers. Refer to the servo amplifiers with the same rated output.
2. The combinations of servo amplifiers and servo motors with an electromagnetic brake or servo motors with functional safety are the same as those described in this table. Refer to "Combinations of Geared Servo Motors and Servo Amplifiers or Drive Units" for the combinations of geared servo motors and servo amplifiers.
3. Use the servo amplifiers with firmware version C2 or later. If the servo amplifiers with the previous firmware version are connected, an alarm occurs.

Combinations of Rotary Servo Motors and Drive Units (Note 1, 2)

The torque can be increased by combining a large-capacity drive unit.
The torque characteristics vary by the combinations. Refer to the list of the specifications of each rotary servo motor.
Any combination of the servo motors with different series and capacities is possible as long as the servo motors are compatible with the multi-axis drive unit.

Drive unit (400 V)

○: Standard torque ◎: Torque increased

Rotary servo motor (Note 2)			Drive unit MR-J5D1-					Drive unit MR-J5D2-					Drive unit MR-J5D3-	
			100G4	200G4	350G4	500G4	700G4	100G4	200G4	350G4	500G4	700G4	100G4	200G4
HK-KT_W	40 × 40	HK-KT053W	◎ (Note 3)	-	-	-	-	◎ (Note 3)	-	-	-	-	◎ (Note 3)	-
		HK-KT13W	◎ (Note 3)	-	-	-	-	◎ (Note 3)	-	-	-	-	◎ (Note 3)	-
		HK-KT1M3W	◎ (Note 3)	-	-	-	-	◎ (Note 3)	-	-	-	-	◎ (Note 3)	-
HK-KT_4_W	60 × 60	HK-KT434W	◎ (Note 3)	◎ (Note 3)	-	-	-	◎ (Note 3)	◎ (Note 3)	-	-	-	◎ (Note 3)	◎ (Note 3)
		HK-KT634W	○ (Note 3)	◎ (Note 3)	◎ (Note 3)	-	-	○ (Note 3)	◎ (Note 3)	◎ (Note 3)	-	-	○ (Note 3)	◎ (Note 3)
	80 × 80	HK-KT7M34W	○ (Note 3)	◎ (Note 3)	◎ (Note 3)	-	-	○ (Note 3)	◎ (Note 3)	◎ (Note 3)	-	-	○ (Note 3)	◎ (Note 3)
		HK-KT1034W	○ (Note 3)	◎ (Note 3)	◎ (Note 3)	-	-	○ (Note 3)	◎ (Note 3)	◎ (Note 3)	-	-	○ (Note 3)	◎ (Note 3)
	90 × 90	HK-KT634UW	◎	◎	-	-	-	◎	◎	-	-	-	◎	◎
		HK-KT1034UW	○	◎	◎	-	-	○	◎	◎	-	-	○	◎
		HK-KT1534W	-	○ (Note 3)	◎ (Note 3)	-	-	-	○ (Note 3)	◎ (Note 3)	-	-	-	○ (Note 3)
		HK-KT2034W	-	○ (Note 3)	◎ (Note 3)	-	-	-	○ (Note 3)	◎ (Note 3)	-	-	-	○ (Note 3)
		HK-KT2024W	-	○ (Note 3)	◎ (Note 3)	-	-	-	○ (Note 3)	◎ (Note 3)	-	-	-	○ (Note 3)
HK-ST_4_W	130 × 130	HK-ST524W	◎ (Note 4)	◎ (Note 4)	-	-	-	◎ (Note 4)	◎ (Note 4)	-	-	-	◎ (Note 4)	◎ (Note 4)
		HK-ST1024W	○ (Note 4)	◎ (Note 4)	◎ (Note 4)	-	-	○ (Note 4)	◎ (Note 4)	◎ (Note 4)	-	-	○ (Note 4)	◎ (Note 4)
		HK-ST1724W	-	○ (Note 4)	○ (Note 4)	○ (Note 5)	-	-	○ (Note 4)	○ (Note 4)	○ (Note 5)	-	-	○ (Note 4)
		HK-ST2024AW	-	○ (Note 4)	◎ (Note 4)	◎ (Note 5)	-	-	○ (Note 4)	◎ (Note 4)	◎ (Note 5)	-	-	○ (Note 4)
		HK-ST3024W	-	-	○ (Note 4)	◎ (Note 5)	◎ (Note 5)	-	-	○ (Note 4)	◎ (Note 5)	◎ (Note 5)	-	-
		HK-ST3534W	-	-	○	◎	-	-	-	○	◎	-	-	-
		HK-ST5034W	-	-	-	○	◎	-	-	-	○	◎	-	-
	176 × 176	HK-ST2024W	-	○ (Note 4)	◎ (Note 4)	◎ (Note 5)	-	-	○ (Note 4)	◎ (Note 4)	◎ (Note 5)	-	-	○ (Note 4)
		HK-ST3524W	-	-	○ (Note 4)	◎ (Note 5)	◎ (Note 5)	-	-	○ (Note 4)	◎ (Note 5)	◎ (Note 5)	-	-
		HK-ST5024W	-	-	-	○ (Note 5)	◎ (Note 5)	-	-	-	○ (Note 5)	◎ (Note 5)	-	-
		HK-ST7024W	-	-	-	-	○ (Note 5)	-	-	-	-	○ (Note 5)	-	-
HK-RT_4W	90 × 90	HK-RT1034W	○	◎	-	-	-	○	◎	-	-	-	○	◎
		HK-RT1534W	-	○	-	◎	-	-	○	-	◎	-	-	○
		HK-RT2034W	-	○	◎	-	-	-	○	◎	-	-	-	○
	130 × 130	HK-RT3534W	-	-	○	◎	-	-	-	○	◎	-	-	-
		HK-RT5034W	-	-	-	○	◎	-	-	-	○	◎	-	-
		HK-RT7034W	-	-	-	-	○	-	-	-	-	○	-	-

Notes: 1. The combinations of servo motors and drive units with special specifications are the same as those of standard drive units. Refer to the drive units with the same rated output.
2. The combinations of drive units and servo motors with an electromagnetic brake or servo motors with functional safety are the same as those described in this table. Refer to "Combinations of Geared Servo Motors and Servo Amplifiers or Drive Units" for the combinations of geared servo motors and drive units.
3. Use the rotary servo motors manufactured in September 2020 or later. If the rotary servo motors manufactured before that date are connected, an alarm occurs. Refer to "Rotary Servo Motor User's Manual (For MR-J5)" for how to check the date of manufacture.
4. Use the rotary servo motors manufactured in December 2020 or later. If the rotary servo motors manufactured before that date are connected, an alarm occurs. Refer to "Rotary Servo Motor User's Manual (For MR-J5)" for how to check the date of manufacture.
5. Use the rotary servo motors manufactured in April 2021 or later. If the rotary servo motors manufactured before that date are connected, an alarm occurs. Refer to "Rotary Servo Motor User's Manual (For MR-J5)" for how to check the date of manufacture.

Combinations of Geared Servo Motors and Servo Amplifiers or Drive Units (Note 1, 2)

The torques of the geared servo motors do not increase even when these servo motors are combined with larger capacity servo amplifiers or drive units.
Any combination of the servo motors with different series and capacities is possible as long as the servo motors are compatible with the multi-axis servo amplifier or the multi-axis drive unit. The multi-axis servo amplifier can be used in a mixed combination of the rotary servo motors, the linear servo motors, and the direct drive motors.

1-axis servo amplifier (200 V)

○: Standard torque

Geared servo motor (Note 2)			Servo amplifier MR-J5- (200 V)									
			10G/B/A	20G/B/A	40G/B/A	60G/B/A	70G/B/A	100G/B/A	200G/B/A	350G/B/A	500G/B/A	700G/B/A
HK-KT_G_	40 × 40	HK-KT053G_	○	○	○	-	-	-	-	-	-	-
		HK-KT13G_	○	○	○	-	-	-	-	-	-	-
	60 × 60	HK-KT23G_	-	○	○	○	-	-	-	-	-	-
		HK-KT43G_	-	-	○	○	○	-	-	-	-	-
	80 × 80	HK-KT7M3G_	-	-	-	-	○	○	○	-	-	-
HK-ST_G_	130 × 130	HK-ST52G_	-	-	-	○	○	○	-	-	-	-
		HK-ST102G_	-	-	-	-	-	○	○	○	-	-
		HK-ST152G_	-	-	-	-	-	-	○	○	-	-
	176 × 176	HK-ST202G_	-	-	-	-	-	-	○	○	-	-
		HK-ST352G_	-	-	-	-	-	-	-	○	○ (Note 3)	-
		HK-ST502G_	-	-	-	-	-	-	-	-	○	○
		HK-ST702G_	-	-	-	-	-	-	-	-	-	○

1-axis servo amplifier (400 V)

○: Standard torque

Geared servo motor (Note 2)			Servo amplifier MR-J5- (400 V)					
			60G4/B4/A4	100G4/B4/A4	200G4/B4/A4	350G4/B4/A4	500G4/B4/A4	700G4/B4/A4
HK-ST_4G_	130 × 130	HK-ST524G_	○ (Note 3)	○ (Note 3)	○ (Note 3)	-	-	-
		HK-ST1024G_	-	○ (Note 3)	○ (Note 3)	○ (Note 3)	-	-
		HK-ST1524G_	-	-	○ (Note 3)	○ (Note 3)	○ (Note 4)	-
	176 × 176	HK-ST2024G_	-	-	○ (Note 3)	○ (Note 3)	○ (Note 4)	-
		HK-ST3524G_	-	-	-	○ (Note 3)	○ (Note 4)	○ (Note 4)
		HK-ST5024G_	-	-	-	-	○ (Note 4)	○ (Note 4)
		HK-ST7024G_	-	-	-	-	-	○ (Note 4)

Multi-axis servo amplifier (200 V)

○: Standard torque

Geared servo motor (Note 2)			Servo amplifier MR-J5W2-				Servo amplifier MR-J5W3-	
			22G/B	44G/B	77G/B	1010G/B	222G/B	444G/B
HK-KT_G_	40 × 40	HK-KT053G_	○	○	-	-	○	○
		HK-KT13G_	○	○	-	-	○	○
	60 × 60	HK-KT23G_	○	○	-	-	○	○
		HK-KT43G_	-	○	○	○	-	○
	80 × 80	HK-KT7M3G_	-	-	○	○	-	-
HK-ST_G_	130 × 130	HK-ST52G_	-	-	○	○	-	-
		HK-ST102G_	-	-	-	○	-	-

Drive unit (400 V)

○: Standard torque

Geared servo motor (Note 2)			Drive unit MR-J5D1-					Drive unit MR-J5D2-					Drive unit MR-J5D3-	
			100G4	200G4	350G4	500G4	700G4	100G4	200G4	350G4	500G4	700G4	100G4	200G4
HK-ST_4G_	130 × 130	HK-ST524G_	○ (Note 3)	○ (Note 3)	-	-	-	○ (Note 3)	○ (Note 3)	-	-	-	○ (Note 3)	○ (Note 3)
		HK-ST1024G_	○ (Note 3)	○ (Note 3)	○ (Note 3)	-	-	○ (Note 3)	○ (Note 3)	○ (Note 3)	-	-	○ (Note 3)	○ (Note 3)
		HK-ST1524G_	-	○ (Note 3)	○ (Note 3)	○ (Note 4)	-	-	○ (Note 3)	○ (Note 3)	○ (Note 4)	-	-	○ (Note 3)
	176 × 176	HK-ST2024G_	-	○ (Note 3)	○ (Note 3)	○ (Note 4)	-	-	○ (Note 3)	○ (Note 3)	○ (Note 4)	-	-	○ (Note 3)
		HK-ST3524G_	-	-	○ (Note 3)	○ (Note 4)	○ (Note 4)	-	-	○ (Note 3)	○ (Note 4)	○ (Note 4)	-	-
		HK-ST5024G_	-	-	-	○ (Note 4)	○ (Note 4)	-	-	-	○ (Note 4)	○ (Note 4)	-	-
		HK-ST7024G_	-	-	-	-	○ (Note 4)	-	-	-	-	○ (Note 4)	-	-

Notes: 1. The combinations of servo motors and servo amplifiers or drive units with special specifications are the same as those of standard servo amplifiers or drive units. Refer to the servo amplifiers or drive units with the same rated output.
2. The combinations of servo motors with an electromagnetic brake and servo amplifiers or drive units are the same as those described in this table.
3. Use the rotary servo motors manufactured in December 2020 or later. If the rotary servo motors manufactured before that date are connected, an alarm occurs. Refer to "Rotary Servo Motor User's Manual (For MR-J5)" for how to check the date of manufacture.
4. Use the rotary servo motors manufactured in April 2021 or later. If the rotary servo motors manufactured before that date are connected, an alarm occurs. Refer to "Rotary Servo Motor User's Manual (For MR-J5)" for how to check the date of manufacture.

Combinations of Linear Servo Motors and Servo Amplifiers (Note 1)

1-axis servo amplifier

○: Standard thrust

Linear servo motor			Servo amplifier MR-J5-								
	Primary side (coil)	Secondary side (magnet)	20G/B/A	40G/B/A	60G/B/A	70G/B/A	100G/B/A	200G/B/A	350G/B/A	500G/B/A	700G/B/A
LM-H3 series	LM-H3P2A-07P-BSS0	LM-H3S20-288-BSS0 LM-H3S20-384-BSS0 LM-H3S20-480-BSS0 LM-H3S20-768-BSS0	-	○	-	-	-	-	-	-	-
	LM-H3P3A-12P-CSS0	LM-H3S30-288-CSS0	-	○	-	-	-	-	-	-	-
	LM-H3P3B-24P-CSS0	LM-H3S30-384-CSS0	-	-	-	○	-	-	-	-	-
	LM-H3P3C-36P-CSS0	LM-H3S30-480-CSS0	-	-	-	○	-	-	-	-	-
	LM-H3P3D-48P-CSS0	LM-H3S30-768-CSS0	-	-	-	-	-	○	-	-	-
	LM-H3P7A-24P-ASS0	LM-H3S70-288-ASS0	-	-	-	○	-	-	-	-	-
	LM-H3P7B-48P-ASS0	LM-H3S70-384-ASS0	-	-	-	-	-	○	-	-	-
	LM-H3P7C-72P-ASS0	LM-H3S70-480-ASS0	-	-	-	-	-	○	-	-	-
	LM-H3P7D-96P-ASS0	LM-H3S70-768-ASS0	-	-	-	-	-	-	○	-	-
LM-AJ series (Note 2)	LM-AJP1B-07K-JSS0	LM-AJS10-080-JSS0 LM-AJS10-200-JSS0 LM-AJS10-400-JSS0	-	○	-	-	-	-	-	-	-
	LM-AJP1D-14K-JSS0		-	-	-	○	-	-	-	-	-
	LM-AJP2B-12S-JSS0	LM-AJS20-080-JSS0 LM-AJS20-200-JSS0 LM-AJS20-400-JSS0	-	○	-	-	-	-	-	-	-
	LM-AJP2D-23T-JSS0		-	-	-	○	-	-	-	-	-
	LM-AJP3B-17N-JSS0	LM-AJS30-080-JSS0 LM-AJS30-200-JSS0 LM-AJS30-400-JSS0	-	○	-	-	-	-	-	-	-
	LM-AJP3D-35R-JSS0		-	-	-	○	-	-	-	-	-
	LM-AJP4B-22M-JSS0	LM-AJS40-080-JSS0 LM-AJS40-200-JSS0 LM-AJS40-400-JSS0	-	○	-	-	-	-	-	-	-
	LM-AJP4D-45N-JSS0		-	-	-	○	-	-	-	-	-
LM-F series	LM-FP2B-06M-1SS0	LM-FS20-480-1SS0 LM-FS20-576-1SS0	-	-	-	-	-	○	-	-	-
	LM-FP2D-12M-1SS0		-	-	-	-	-	-	-	○	-
	LM-FP2F-18M-1SS0		-	-	-	-	-	-	-	-	○
	LM-FP4B-12M-1SS0	LM-FS40-480-1SS0 LM-FS40-576-1SS0	-	-	-	-	-	-	-	○	-
	LM-FP4D-24M-1SS0		-	-	-	-	-	-	-	-	○
LM-K2 series	LM-K2P1A-01M-2SS1	LM-K2S10-288-2SS1 LM-K2S10-384-2SS1	-	○	-	-	-	-	-	-	-
	LM-K2P1C-03M-2SS1	LM-K2S10-480-2SS1 LM-K2S10-768-2SS1	-	-	-	-	-	○	-	-	-
	LM-K2P2A-02M-1SS1	LM-K2S20-288-1SS1 LM-K2S20-384-1SS1 LM-K2S20-480-1SS1 LM-K2S20-768-1SS1	-	-	-	○	-	-	-	-	-
	LM-K2P2C-07M-1SS1		-	-	-	-	-	-	○	-	-
	LM-K2P2E-12M-1SS1		-	-	-	-	-	-	-	○	-
	LM-K2P3C-14M-1SS1	LM-K2S30-288-1SS1 LM-K2S30-384-1SS1	-	-	-	-	-	-	○	-	-
	LM-K2P3E-24M-1SS1	LM-K2S30-480-1SS1 LM-K2S30-768-1SS1	-	-	-	-	-	-	-	○	-
LM-U2 series	LM-U2PAB-05M-0SS0	LM-U2SA0-240-0SS0	○	-	-	-	-	-	-	-	-
	LM-U2PAD-10M-0SS0	LM-U2SA0-300-0SS0	-	○	-	-	-	-	-	-	-
	LM-U2PAF-15M-0SS0	LM-U2SA0-420-0SS0	-	○	-	-	-	-	-	-	-
	LM-U2PBB-07M-1SS0	LM-U2SB0-240-1SS1	○	-	-	-	-	-	-	-	-
	LM-U2PBD-15M-1SS0	LM-U2SB0-300-1SS1	-	-	○	-	-	-	-	-	-
	LM-U2PBF-22M-1SS0	LM-U2SB0-420-1SS1	-	-	-	○	-	-	-	-	-
	LM-U2P2B-40M-2SS0	LM-U2S20-300-2SS1 LM-U2S20-480-2SS1	-	-	-	-	-	○	-	-	-
	LM-U2P2C-60M-2SS0		-	-	-	-	-	-	○	-	-
	LM-U2P2D-80M-2SS0		-	-	-	-	-	-	-	○	-
LM-AU series (Note 2, 3)	LM-AUP3A-03V-JSS0	LM-AUS30-120-JSS0 LM-AUS30-180-JSS0 LM-AUS30-240-JSS0 LM-AUS30-300-JSS0 LM-AUS30-600-JSS0	-	○	-	-	-	-	-	-	-
	LM-AUP3B-06V-JSS0		-	○	-	-	-	-	-	-	-
	LM-AUP3C-09V-JSS0		-	○	-	-	-	-	-	-	-
	LM-AUP3D-11R-JSS0		-	○	-	-	-	-	-	-	-
	LM-AUP4A-04R-JSS0	LM-AUS40-120-JSS0 LM-AUS40-180-JSS0 LM-AUS40-240-JSS0 LM-AUS40-300-JSS0 LM-AUS40-600-JSS0	-	-	-	○	-	-	-	-	-
	LM-AUP4B-09R-JSS0		-	-	-	○	-	-	-	-	-
	LM-AUP4C-13P-JSS0		-	-	-	○	-	-	-	-	-
	LM-AUP4D-18M-JSS0		-	-	-	○	-	-	-	-	-
	LM-AUP4F-26P-JSS0		-	-	-	-	-	○	-	-	-
	LM-AUP4H-35M-JSS0		-	-	-	-	-	○	-	-	-

Notes: 1. The combinations of linear servo motors and servo amplifiers with special specifications (excluding MR-J5-B-LL) are the same as those of standard servo amplifiers. Refer to the servo amplifiers with the same rated output. MR-J5-B-LL does not support linear servo motors.
2. LM-AJ series and LM-AU series do not support MR-J5-B_.
3. Use the servo amplifiers with firmware version D0 or later. If the servo amplifiers with the previous firmware version are connected, an alarm occurs.

Combinations of Linear Servo Motors and Servo Amplifiers (Note 1)

Any combination of the rotary servo motors, the linear servo motors, and the direct drive motors with different series and capacities is possible as long as the servo motors are compatible with the servo amplifier.

Multi-axis servo amplifier

○: Standard thrust

Linear servo motor			Servo amplifier MR-J5W2-				Servo amplifier MR-J5W3-	
	Primary side (coil)	Secondary side (magnet)	22G/B	44G/B	77G/B	1010G/B	222G/B	444G/B
LM-H3 series	LM-H3P2A-07P-BSS0	LM-H3S20-288-BSS0 LM-H3S20-384-BSS0 LM-H3S20-480-BSS0 LM-H3S20-768-BSS0	-	○	○	○	-	○
	LM-H3P3A-12P-CSS0	LM-H3S30-288-CSS0 LM-H3S30-384-CSS0 LM-H3S30-480-CSS0 LM-H3S30-768-CSS0	-	○	○	○	-	○
	LM-H3P3B-24P-CSS0		-	-	○	○	-	-
	LM-H3P3C-36P-CSS0		-	-	○	○	-	-
	LM-H3P7A-24P-ASS0	LM-H3S70-288-ASS0 LM-H3S70-384-ASS0 LM-H3S70-480-ASS0 LM-H3S70-768-ASS0	-	-	○	○	-	-
LM-AJ series (Note 2)	LM-AJP1B-07K-JSS0	LM-AJS10-080-JSS0 LM-AJS10-200-JSS0 LM-AJS10-400-JSS0	-	○	○	○	-	○
	LM-AJP1D-14K-JSS0		-	-	○	○	-	-
	LM-AJP2B-12S-JSS0	LM-AJS20-080-JSS0 LM-AJS20-200-JSS0 LM-AJS20-400-JSS0	-	○	○	○	-	○
	LM-AJP2D-23T-JSS0		-	-	○	○	-	-
	LM-AJP3B-17N-JSS0	LM-AJS30-080-JSS0 LM-AJS30-200-JSS0 LM-AJS30-400-JSS0	-	○	○	○	-	○
	LM-AJP3D-35R-JSS0		-	-	○	○	-	-
	LM-AJP4B-22M-JSS0	LM-AJS40-080-JSS0 LM-AJS40-200-JSS0 LM-AJS40-400-JSS0	-	○	○	○	-	○
	LM-AJP4D-45N-JSS0		-	-	○	○	-	-
LM-K2 series	LM-K2P1A-01M-2SS1	LM-K2S10-288-2SS1 LM-K2S10-384-2SS1 LM-K2S10-480-2SS1 LM-K2S10-768-2SS1	-	○	○	○	-	○
	LM-K2P2A-02M-1SS1	LM-K2S20-288-1SS1 LM-K2S20-384-1SS1 LM-K2S20-480-1SS1 LM-K2S20-768-1SS1	-	-	○	○	-	-
LM-U2 series	LM-U2PAB-05M-0SS0	LM-U2SA0-240-0SS0 LM-U2SA0-300-0SS0 LM-U2SA0-420-0SS0	○	○	-	-	○	○
	LM-U2PAD-10M-0SS0		-	○	○	○	-	○
	LM-U2PAF-15M-0SS0		-	○	○	○	-	○
	LM-U2PBB-07M-1SS0	LM-U2SB0-240-1SS1 LM-U2SB0-300-1SS1 LM-U2SB0-420-1SS1	○	○	-	-	○	○
	LM-U2PBD-15M-1SS0		-	-	○	○	-	-
	LM-U2PBF-22M-1SS0		-	-	○	○	-	-
LM-AU series (Note 2, 3)	LM-AUP3A-03V-JSS0	LM-AUS30-120-JSS0 LM-AUS30-180-JSS0 LM-AUS30-240-JSS0 LM-AUS30-300-JSS0 LM-AUS30-600-JSS0	-	○	○	○	-	○
	LM-AUP3B-06V-JSS0		-	○	○	○	-	○
	LM-AUP3C-09V-JSS0		-	○	○	○	-	○
	LM-AUP3D-11R-JSS0		-	○	○	○	-	○
	LM-AUP4A-04R-JSS0	LM-AUS40-120-JSS0 LM-AUS40-180-JSS0 LM-AUS40-240-JSS0 LM-AUS40-300-JSS0 LM-AUS40-600-JSS0	-	-	○	○	-	-
	LM-AUP4B-09R-JSS0		-	-	○	○	-	-
	LM-AUP4C-13P-JSS0		-	-	○	○	-	-
	LM-AUP4D-18M-JSS0		-	-	○	○	-	-

Notes: 1. The combinations of servo motors and servo amplifiers with special specifications are the same as those of standard servo amplifiers. Refer to the servo amplifiers with the same rated output.
2. LM-AJ series and LM-AU series do not support MR-J5W_-B.
3. Use the servo amplifiers with firmware version D0 or later. If the servo amplifiers with the previous firmware version are connected, an alarm occurs.

Combinations of Direct Drive Motors and Servo Amplifiers (Note 1)

The torque can be increased by combining a large-capacity servo amplifier.
The torque characteristics vary by the combinations. Refer to the list of the specifications of each direct drive motor.
Any combination of the rotary servo motors, the linear servo motors, and the direct drive motors with different series and capacities is possible as long as the servo motors are compatible with the servo amplifier.

1-axis servo amplifier

○: Standard torque ◎: Torque increased

Direct drive motor (Note 2)		Servo amplifier MR-J5-						
		20G/B/A	40G/B/A	60G/B/A	70G/B/A	100G/B/A	350G/B/A	500G/B/A
TM-RG2M series/ TM-RU2M series	TM-RG2M002C30 TM-RU2M002C30	○	-	-	-	-	-	-
	TM-RG2M004E30 TM-RU2M004E30	○	◎	-	-	-	-	-
	TM-RG2M009G30 TM-RU2M009G30	-	○	-	-	-	-	-
TM-RFM series	TM-RFM002C20	○	-	-	-	-	-	-
	TM-RFM004C20	-	○	-	-	-	-	-
	TM-RFM006C20	-	-	○	-	-	-	-
	TM-RFM006E20	-	-	○	-	-	-	-
	TM-RFM012E20	-	-	-	○	-	-	-
	TM-RFM018E20	-	-	-	-	○	-	-
	TM-RFM012G20	-	-	-	○	-	-	-
	TM-RFM048G20	-	-	-	-	-	○	-
	TM-RFM072G20	-	-	-	-	-	○	-
	TM-RFM040J10	-	-	-	○	-	-	-
	TM-RFM120J10	-	-	-	-	-	○	-
	TM-RFM240J10	-	-	-	-	-	-	○

Multi-axis servo amplifier

○: Standard torque ◎: Torque increased

Direct drive motor (Note 2)		Servo amplifier MR-J5W2-				Servo amplifier MR-J5W3-	
		22G/B	44G/B	77G/B	1010G/B	222G/B	444G/B
TM-RG2M series/ TM-RU2M series	TM-RG2M002C30 TM-RU2M002C30	○	○	-	-	○	○
	TM-RG2M004E30 TM-RU2M004E30	○	◎	-	-	○	◎
	TM-RG2M009G30 TM-RU2M009G30	-	○	○	○	-	○
TM-RFM series	TM-RFM002C20	○	○	-	-	○	○
	TM-RFM004C20	-	○	○	○	-	○
	TM-RFM006C20	-	-	○	○	-	-
	TM-RFM006E20	-	-	○	○	-	-
	TM-RFM012E20	-	-	○	○	-	-
	TM-RFM018E20	-	-	-	○	-	-
	TM-RFM012G20	-	-	○	○	-	-
	TM-RFM040J10	-	-	○	○	-	-

Notes: 1. The combinations of direct drive motors and servo amplifiers with special specifications (excluding MR-J5-G-LL and MR-J5-B-LL) are the same as those of standard servo amplifiers. Refer to the servo amplifiers with the same rated output. MR-J5-G-LL and MR-J5-B-LL do not support direct drive motors.
2. Use the direct drive motors manufactured in June 2019 or later when connecting to MR-J5 servo amplifiers. If the direct drive motors manufactured before that date are connected, an alarm occurs. Refer to "Direct Drive Motor User's Manual" for how to check the date of manufacture.

Safety Sub-Functions (Note 1)

Specifications of servo amplifiers

Item		Specifications		
		MR-J5-G(4)(-N1) MR-J5-B(4)(-RJ) MR-J5W_-B MR-J5-A(4)(-RJ)	MR-J5-G(4)-RJ(N1) MR-J5W_-G(-N1) MR-J5D_-G4(-N1)	MR-J5-G(4)-HS(N1)
Safety performance	Standards	EN ISO 13849-1:2015 Category 3 PL e, IEC 61508 SIL 3, EN IEC 62061 maximum SIL 3, EN 61800-5-2	EN ISO 13849-1:2015 Category 4 PL e, IEC 61508 SIL 3, EN IEC 62061 maximum SIL 3, EN 61800-5-2	
	Mean time to dangerous failure (MTTFd)	MTTFd ≥ 100 [years] (314a)	MTTFd ≥ 100 [years] (750a)	MTTFd ≥ 100 [years] (300a)
	Diagnostic coverage (DC)	DC = Medium, 97.6 %	DC = Medium, 96.5 %	
	Probability of dangerous Failure per Hour (PFH)	PFH = 6.4×10^{-9} [1/h]	PFH = 3×10^{-9} [1/h]	PFH = 7.7×10^{-9} [1/h]
	Mission time (T_M) (Note 3)	T_M = 20 [years]		

Function specifications

Item			Specifications		
			MR-J5-G(4)(-RJ(N1)) MR-J5D_-G4(-N1) MR-J5W_-B	MR-J5W_-G(-N1) MR-J5-B(4)(-RJ) MR-J5-A(4)(-RJ)	MR-J5-G(4)-HS(N1)
Safety sub-functions	STO	Shut-off response time (STO input off → energy shut off)	8 ms or less (using input device) 60 ms or less (using CC-Link IE TSN/EtherCAT®) (Note 4, 5, 8)		
	SS1	Deceleration delay time	0 ms to 60000 ms (functional safety parameter setting)		
	SS2	Deceleration delay time	0 ms to 60000 ms (functional safety parameter setting)		
	SOS	Observation position	0 rev to 1000 rev (functional safety parameter setting)		
	SBC	Shut-off response time	8 ms or less (using input device) 60 ms or less (using CC-Link IE TSN/EtherCAT®) (Note 4, 5, 8)		
	SLS1/2/3/4	Observation speed	0 r/min (mm/s) to 10000 r/min (mm/s) (functional safety parameter setting) (Note 6)		
	SSM	Observation speed	0 r/min (mm/s) to 10000 r/min (mm/s) (functional safety parameter setting)		
	SDI	Direction monitor delay time	0 ms to 60000 ms (functional safety parameter setting)		
	SLI	Observation position	0 rev to 1000 rev (functional safety parameter setting)		
	SLT	Observation torque	-1000.0 % to 1000.0 % (functional safety parameter setting)		
Input/ output function	Input device	Number of inputs (double wiring)	1 point		3 points
		Permissible time for mismatched double inputs	0 ms to 60000 ms (functional safety parameter setting) (Note 9)		
		Noise elimination filter	1.000 ms to 32.000 ms (functional safety parameter setting)		
		Test pulse off time (Note 7)	1 ms or less		
		Test pulse interval (Note 7)	250 ms to 1000 ms		
	Output device	Number of outputs (double wiring)	1 point		3 points
		Test pulse off time	0.500 ms to 2.000 ms (functional safety parameter setting)		
		Test pulse interval	1 s or less		
	External wiring diagnostic output	Number of outputs (double wiring)	-		1 point
		Test pulse off time	-		1.000 ms to 2.000 ms (functional safety parameter setting)
		Test pulse interval	-		1 s or less
Safety communication function		Response time	250 ms (Note 2)		
		Transmission interval monitor time	16.0 ms to 1000.0 ms (functional safety parameter setting) (using CC-Link IE TSN) (Note 8)		
		FSoE Watchdog Time	16.0 ms to 65534.0 ms (object setting) (using EtherCAT®) (Note 8)		
		Safety communication delay time	60 ms or less (using CC-Link IE TSN/EtherCAT®) (Note 4, 8)		

Notes: 1. Supported safety sub-functions and their safety levels vary by the combinations of the servo amplifier or the drive unit and the servo motor, and the firmware version of the servo amplifier. Refer to "List of supported safety sub-functions".
2. This value is applicable when the transmission interval monitor time is 64.0 ms or less, or FSoE Watchdog Time is 60 ms or less.
3. The performance of special proof tests within the mission time of the product is regarded as not necessary, however, the diagnostic interval is suggested as at least one test per three months for Category 3 PL e, SIL 3 on IEC 61800-5-2:2016.
4. This value is applicable when the transmission interval monitor time is 32.0 ms or less, or FSoE Watchdog Time is 30 ms or less.
5. Set the communication cycle as follows:
●MR-J5-G(4)-HS, MR-J5-G(4)-RJ, MR-J5D1-G4: 125 µs or more
●MR-J5-G(4)-HSN1, MR-J5-G(4)-RJN1, MR-J5D1-G4-N1: 250 µs or more
●MR-J5W_-G(-N1), MR-J5D2-G4(-N1), MR-J5D3-G4(-N1): 500 µs or more
6. The observation speed can be set separately.
7. The test pulse is a signal for the external circuit to perform self-diagnosis by turning off the signals to the servo amplifier or the drive unit instantaneously at regular intervals.
8. The listed value is applicable when the safety sub-functions through the network connection are executed.
9. If it is set to 0 ms, no alarm occurs.

Safety Sub-Functions (Note 10)

List of supported safety sub-functions

Supported safety sub-functions and their safety levels vary by the combinations of the servo amplifier or the drive unit and the servo motor. Refer to the table below.

Servo amplifier model (Note 11)	Connection method (connector)	Servo motor type	Safety sub-function (IEC/EN 61800-5-2)										
			STO	SS1		SS2 (Note 3, 6)	SOS (Note 3, 6)	SBC	SLS (Note 3, 6)	SSM (Note 3, 6)	SDI (Note 3, 6)	SLI (Note 3, 6)	SLT (Note 6)
				SS1-t	SS1-r (Note 3, 6)	SS2-t, SS2-r							
MR-J5-G(4)(-N1) MR-J5-B(4)(-RJ) MR-J5W_-B MR-J5-A(4)(-RJ)	DI/O connection (CN8)	Servo motor with functional safety Rotary servo motor Linear servo motor Direct drive motor	Cat. 3 PL e, SIL 3	- (Note 8)	-	-	-	-	-	-	-	-	-
MR-J5-G(4)-HS(N1) MR-J5-G(4)-RJ(N1) (Note 14) MR-J5W_-G(-N1) (Note 4, 9, 14) MR-J5D1-G4(-N1) (Note 14) MR-J5D2-G4(-N1) (Note 9, 14) MR-J5D3-G4(-N1) (Note 9, 14)	DI/O connection (Note 2) (CN8/CN3)	Servo motor with functional safety	Cat. 4 PL e, SIL 3	Cat. 4 PL e, SIL 3	Cat. 4 PL e, SIL 3	Cat. 4 PL e, SIL 3	Cat. 4 PL e, SIL 3	Cat. 4 PL e, SIL 3	Cat. 4 PL e, SIL 3	Cat. 4 PL e, SIL 3	Cat. 4 PL e, SIL 3	Cat. 4 PL e, SIL 3	Cat. 3 PL d, SIL 2
		Rotary servo motor Linear servo motor Direct drive motor	Cat. 4 PL e, SIL 3	Cat. 4 PL e, SIL 3	Cat. 3 PL d, SIL 2	-	-	Cat. 4 PL e, SIL 3	Cat. 3 PL d, SIL 2	Cat. 3 PL d, SIL 2	Cat. 3 PL d, SIL 2	-	Cat. 3 PL d, SIL 2
	Network connection (Note 1, 5, 7, 12, 13, 15) (CN1A/CN1B)	Servo motor with functional safety	Cat. 4 PL e, SIL 3	Cat. 4 PL e, SIL 3	Cat. 4 PL e, SIL 3	Cat. 4 PL e, SIL 3	Cat. 4 PL e, SIL 3	Cat. 4 PL e, SIL 3	Cat. 4 PL e, SIL 3	Cat. 4 PL e, SIL 3	Cat. 4 PL e, SIL 3	Cat. 4 PL e, SIL 3	Cat. 3 PL d, SIL 2
		Rotary servo motor Linear servo motor Direct drive motor	Cat. 4 PL e, SIL 3	Cat. 4 PL e, SIL 3	Cat. 3 PL d, SIL 2	-	-	Cat. 4 PL e, SIL 3	Cat. 3 PL d, SIL 2	Cat. 3 PL d, SIL 2	Cat. 3 PL d, SIL 2	-	Cat. 3 PL d, SIL 2

Notes:
1. Combine the servo amplifier with an R_SFCPU safety CPU with firmware version of 20 or later.
2. The listed safety levels are applicable when one of the following executes safety sub-function control with a diagnosis using test pulses.
   ●MR-J5-G(4)-HS(N1)
   ●Safety CPU or safety controller that meets Category 4 PL e, SIL 3
   When a forced stop switch, a safety switch, or an enable switch is directly connected to the servo amplifier and a diagnosis using test pulses is not executed, the safety level is Category 3 PL d, SIL 2.
3. A fully closed loop system does not support SS1-r, SS2, SOS, SLS, SSM, SDI, and SLI.
4. The safety sub-functions are supported by MR-J5W_-G manufactured in November 2019 or later.
5. Set the communication cycle as follows:
   ●MR-J5-G(4)-HS, MR-J5-G(4)-RJ, MR-J5D1-G4: 125 µs or more
   ●MR-J5-G(4)-HSN1, MR-J5-G(4)-RJN1, MR-J5D1-G4-N1: 250 µs or more
   ●MR-J5W_-G(-N1), MR-J5D2-G4(-N1), MR-J5D3-G4(-N1): 500 µs or more
6. When used with CC-Link IE Field Network Basic, SS1-r, SS2, SOS, SLS, SSM, SDI, SLI, and SLT are available on servo amplifiers or drive units with firmware version D8 or later.
7. The safety sub-functions through the network connection are not available when the servo amplifiers or drive units use EtherNet/IP® or CC-Link IE Field Network Basic.
8. The servo amplifiers support SS1-t when combined with MR-J3-D05. Refer to p. 7-55 in this catalog for details.
9. The STO function can be set for each axis.
10. For 200 V servo amplifiers, the firmware version B2 or later is required.
11. The functional safety unit (MR-D30) cannot be connected.
12. When used with CC-Link IE TSN Class A, the safety sub-functions through the network connection are available on servo amplifiers or drive units with firmware version D4 or later.
13. The safety sub-functions through the network connection are not available when the servo amplifier uses driver communication function.
14. For MR-J5-G(4)-RJN1, MR-J5W_-G(-N1), and MR-J5D_-G4-N1, SS1-r, SS2, SOS, SLS, SSM, SDI, SLI, and SLT are available on servo amplifiers or drive units with firmware version D8 or later.
15. For MR-J5-G(4)-RJN1, MR-J5W_-G(-N1), and MR-J5D_-G4-N1, the safety sub-functions through the network connection are available on servo amplifiers or drive units with firmware version D8 or later.

Safety Sub-Functions

Safety sub-functions compliant with IEC/EN 61800-5-2

Safe torque off (STO)

Responding to the input signal from external equipment, the STO function shuts off power to the servo motor electronically using the internal circuit (shuts off through secondary-side output).
This function corresponds to the Stop category 0 of IEC/EN 60204-1.

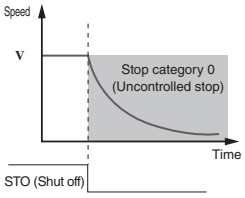

Execute the STO function in servo off state or when the servo motor is stopped.

Safely-limited speed (SLS)

This function monitors the speed of the servo motor not to exceed the specified speed limit. If the speed exceeds the limit, the motor power is shut off by the STO.

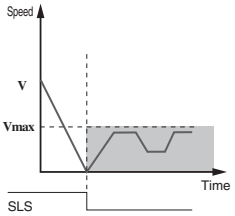

Safe stop 1 (SS1)

Responding to the input signal from external equipment, the servo motor starts to decelerate. After the set delay time for motor stop is passed, the STO function starts. Monitoring the servo motor deceleration based on the motor deceleration rate is also supported.
This function corresponds to the Stop category 1 of IEC/EN 60204-1.

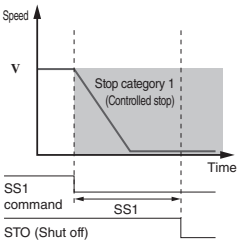

Safe speed monitor (SSM)

The SSM signals are outputted when the speed of the servo motor is below the specified speed limit.

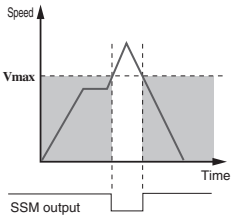

Safe stop 2 (SS2)

Responding to the input signal from external equipment, the servo motor starts to decelerate. After the set delay time for motor stop is passed, the SOS function starts. Monitoring the servo motor deceleration based on the motor deceleration rate is also supported.
This function corresponds to the Stop category 2 of IEC/EN 60204-1.

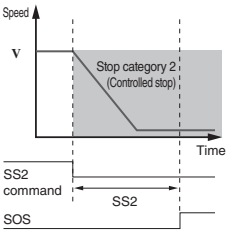

Safe direction (SDI)

This function monitors whether the servo motor moves in the command direction.
If the servo motor moves in a different direction from the command direction, the STO function is executed.

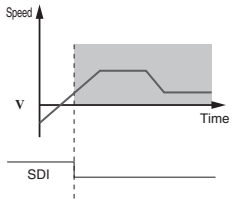

Safe operating stop (SOS)

This function monitors the position of the servo motor not to deviate from the specified range. Power is still supplied to the servo motor during the SOS function.

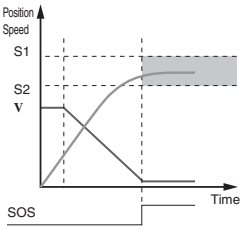

Safely-limited increment (SLI)

This function monitors the travel distance of the servo motor not to deviate from the specified range. If the travel distance exceeds the range, the STO function is executed.

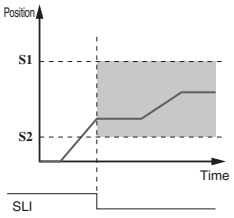

Safe brake control (SBC)

The SBC signals are outputted for external brake control.

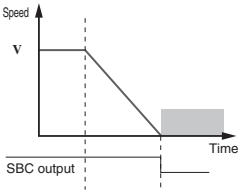

Safely-limited torque (SLT)

This function monitors the torque (or the thrust) of the servo motor not to deviate from the specified range. If the torque (or the thrust) exceeds the range, the STO function is executed.

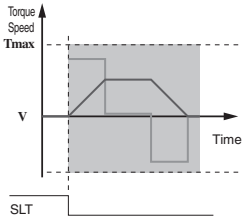

: Function activation area

Environment

Motion module

Item	Operation	Storage
Ambient temperature	0 ˚C to 55 ˚C 0 ˚C to 60 ˚C (when using the extended temperature range base unit) (Note 2)	-25 ˚C to 75 ˚C (non-freezing)
Ambient humidity	5 %RH to 95 %RH (non-condensing)	
Ambience	Indoors (no direct sunlight); no corrosive gas, inflammable gas, oil mist or dust	
Altitude	2000 m or less	
Vibration resistance	Under intermittent vibration (directions of X, Y, and Z axes): 5 Hz to 8.4 Hz, displacement amplitude 3.5 mm 8.4 Hz to 150 Hz, acceleration amplitude 9.8 m/s^2 Under continuous vibration: 5 Hz to 8.4 Hz, displacement amplitude 1.75 mm 8.4 Hz to 150 Hz, acceleration amplitude 4.9 m/s^2	

Servo amplifier/drive unit/simple converter

Item	Operation	Transportation	Storage
Ambient temperature	0 ˚C to 60 ˚C (non-freezing) Class 3K3 (IEC 60721-3-3)	-25 ˚C to 70 ˚C (non-freezing) Class 2K12 (IEC 60721-3-2)	-25 ˚C to 70 ˚C (non-freezing) Class 1K4 (IEC 60721-3-1)
Ambient humidity	5 %RH to 95 %RH (non-condensing)		
Ambience	Indoors (no direct sunlight); no corrosive gas, inflammable gas, oil mist or dust		
Altitude/atmospheric pressure	Altitude: 2000 m or less (Note 1)	Overland/sea transportation, or transporting on an airplane whose cargo compartment is pressurized at 700 hPa or higher	Atmospheric pressure: 700 hPa to 1060 hPa (Equivalent to altitudes from -400 m to 3000 m)
Vibration resistance	Under intermittent vibration: 10 Hz to 57 Hz, displacement amplitude 0.075 mm 57 Hz to 150 Hz, acceleration amplitude 9.8 m/s^2 Class 3M1 (IEC 60721-3-3) Under continuous vibration (directions of X, Y, and Z axes): 10 Hz to 55 Hz, acceleration amplitude 5.9 m/s^2	2 Hz to 9 Hz, displacement amplitude (single amplitude) 7.5 mm 9 Hz to 200 Hz, acceleration amplitude 20 m/s^2 Class 2M3 (IEC 60721-3-2)	2 Hz to 9 Hz, displacement amplitude (single amplitude) 1.5 mm 9 Hz to 200 Hz, acceleration amplitude 5 m/s^2 Class 1M2 (IEC 60721-3-1)

Power regeneration converter unit

Item	Operation	Transportation	Storage
Ambient temperature	0 ˚C to 55 ˚C (non-freezing) Class 3K3 (IEC 60721-3-3)	-20 ˚C to 65 ˚C (non-freezing) Class 2K12 (IEC 60721-3-2)	-20 ˚C to 65 ˚C (non-freezing) Class 1K4 (IEC 60721-3-1)
Ambient humidity	5 %RH to 90 %RH (non-condensing)		
Ambience	Indoors (no direct sunlight); no corrosive gas, inflammable gas, oil mist or dust		
Altitude	2000 m or less (Note 1)		1000 m or less
Vibration resistance	Under intermittent vibration: 10 Hz to 57 Hz, amplitude 0.075 mm 57 Hz to 150 Hz, acceleration amplitude 9.8 m/s^2 (IEC 60068-2-6 Test Fc) Under continuous vibration (directions of X, Y, and Z axes): 10 Hz to 55 Hz, acceleration amplitude 5.9 m/s^2	2 Hz to 9 Hz, displacement amplitude (single amplitude) 7.5 mm 9 Hz to 200 Hz, acceleration amplitude 20 m/s^2 Class 2M3 (IEC 60721-3-2)	2 Hz to 9 Hz, displacement amplitude (single amplitude) 1.5 mm 9 Hz to 200 Hz, acceleration amplitude 5 m/s^2 Class 1M2 (IEC 60721-3-1)

Notes: 1. Refer to User's Manuals of each servo amplifier, drive unit, and power regeneration converter unit for the restrictions on using the servo amplifiers, the drive units, and the power regeneration converter units at an altitude exceeding 1000 m and up to 2000 m.
2. The extended temperature range base unit is compatible with RD78G only.

Environment

Rotary servo motor

Item	Operation	Storage
Ambient temperature	0 ˚C to 60 ˚C (non-freezing) (Note 2)	-15 ˚C to 70 ˚C (non-freezing)
Ambient humidity	10 %RH to 90 %RH (non-condensing)	
Ambience (Note 1)	Indoors (no direct sunlight); no corrosive gas, inflammable gas, oil mist or dust, no object generating a strong magnetic field	
Altitude	2000 m or less (Note 3)	
External magnetic field	10 mT or less	
Vibration resistance	Refer to the specifications of each rotary servo motor.	

Linear servo motor (LM-H3/LM-F/LM-K2/LM-U2 series)

Item	Operation	Storage
Ambient temperature	0 ˚C to 60 ˚C (non-freezing) (Note 2)	-15 ˚C to 70 ˚C (non-freezing)
Ambient humidity	10 %RH to 80 %RH (non-condensing)	10 %RH to 90 %RH (non-condensing)
Ambience (Note 1)	Indoors (no direct sunlight); no corrosive gas, inflammable gas, oil mist or dust	
Altitude	2000 m or less (Note 5)	
Vibration resistance	Refer to the specifications of each linear servo motor.	

Linear servo motor (LM-AJ series/LM-AU series)

Item	Operation	Storage
Ambient temperature	0 ˚C to 40 ˚C (non-freezing)	-15 ˚C to 70 ˚C (non-freezing)
Ambient humidity	10 %RH to 80 %RH (non-condensing)	10 %RH to 90 %RH (non-condensing)
Ambience (Note 1)	Indoors (no direct sunlight); no corrosive gas, inflammable gas, oil mist or dust	
Altitude	1000 m or less	
Vibration resistance	Refer to the specifications of each linear servo motor.	

Direct drive motor

Item	Operation	Storage
Ambient temperature	0 ˚C to 60 ˚C (non-freezing) (Note 2)	-15 ˚C to 70 ˚C (non-freezing)
Ambient humidity	10 %RH to 80 %RH (non-condensing)	10 %RH to 90 %RH (non-condensing)
Ambience (Note 1, 4)	Indoors (no direct sunlight); no corrosive gas, inflammable gas, oil mist or dust	
Altitude	2000 m or less (Note 3)	
Vibration resistance	Refer to the specifications of each direct drive motor.	

Notes: 1. Do not use the servo motors in the environment where the servo motors are exposed to oil mist, oil and/or water.
2. Refer to User's Manuals of each servo motor for the restrictions on the ambient temperature.
3. Refer to User's Manuals of each servo motor for the derating condition when using the servo motors at an altitude exceeding 1000 m and up to 2000 m.
4. Do not place any object (such as a magnet) which generates a magnetic force near the direct drive motor. If it is unavoidable, take a measure such as mounting a shielding plate and so on to cut off the magnetic force.
5. Refer to "Linear Servo Motor User's Manual (LM-H3/LM-U2/LM-F/LM-K2)" for the restrictions on using the linear servo motor at an altitude exceeding 1000 m and up to 2000 m.

MEMO

2 Servo System Controllers

Motion Module 2-2

Motion Control Software 2-14

Motion Control Board 2-18

* Refer to p. 7-90 in this catalog for conversion of units.

Motion Module RD78G (Simple Motion Mode)

Control specifications

Items in bold: differences

Item		Specifications			Comparison with the previous models (Simple Motion modules)	
		RD78G4	**RD78G8**	**RD78G16**	RD77MS	QD77MS
Maximum number of control axes [axis]		4	8	16	2, 4, 8, 16	2, 4, 16 (QD77MS2 and QD77MS4 use the buffer memory assignment for 4 axes)
Command interface		**CC-Link IE TSN**			SSCNET III/H	
Servo amplifier		**MR-J5-G, MR-J5W2-G, MR-J5W3-G, MR-J5D1-G4, MR-J5D2-G4, MR-J5D3-G4**			MR-J5-B, MR-J5W2-B, MR-J5W3-B, MR-J4-B, MR-J4W2-B, MR-J4W3-B	
Operation cycle (operation cycle setting) [μs]		**250, 500, 1000, 2000, 4000**			444, 888, 1777, 3555	888, 1777
Interpolation function		Linear interpolation (up to 4 axes), 2-axis circular interpolation, helical interpolation				Linear interpolation (up to 4 axes), 2-axis circular interpolation
Control method		Positioning control, path control (linear, arc, and helical (Note 1)), speed control, speed-torque control, synchronous control, continuous operation to torque control				
Acceleration/deceleration processing		Trapezoidal acceleration/deceleration, S-curve acceleration/deceleration				
Compensation function		Backlash compensation, electronic gear, near pass function				
Synchronous control		Synchronous encoder input, command generation axis, cam, phase compensation			Synchronous encoder input, cam, phase compensation	Synchronous encoder input, command generation axis, cam, phase compensation
Cam control	Maximum number of cam registrations (Note 2)	256				
	Cam data	Stroke ratio data format, coordinate data format				
	Cam auto-generation function	Cam for a rotary knife				
Positioning control method		Motion profile table				
Control unit		mm, inch, degree, pulse				
Number of positioning data		600 data (positioning data No. 1 to 600)/axis **(Set with MELSOFT GX Works3 or a sequence program (No. 1 to 600).)**			600 data (positioning data No. 1 to 600)/axis (Set with MELSOFT GX Works3 or a sequence program (No. 1 to 100).)	600 data (positioning data No. 1 to 600)/axis (Set with MELSOFT GX Works2 or a sequence program (QD77MS16 (No. 1 to 100), QD77MS2/QD77MS4 (No. 1 to 600).)
Backup		Parameters, positioning data, and block start data can be saved on flash ROM (batteryless backup)				
Home position return		**Driver home position return (Note 3)**			Proximity dog method, count method 1, count method 2, data set method, scale home position signal detection method, driver home position return (Note 3)	Proximity dog method, count method 1, count method 2, data set method, scale home position signal detection method
Positioning control		Linear interpolation control (up to 4 axes (Note 4) (vector speed, reference axis speed)), fixed-pitch feed control (up to 4 axes), 2-axis circular interpolation (auxiliary point-specified, central point-specified), helical interpolation control, speed control (up to 4 axes), speed-position switching control (INC mode, ABS mode), position-speed switching control, current value change (positioning data, start No. for a current value changing) NOP instruction, JUMP instruction (conditional, unconditional), LOOP, LEND, block start, condition start, wait start, simultaneous start, repeated start				
Manual control	JOG operation	Provided				
	Inching operation	Provided				
	Manual pulse generator operation	Up to 1 module (incremental), unit magnification (1 to 10000 times), **via a CPU (Note 6)**			Up to 1 module (incremental), unit magnification (1 to 10000 times), **an external input connection connector**	
Speed-torque control		Speed control not including position loop, torque control, continuous operation to torque control				
Absolute position system		Provided				
Synchronous encoder axis (Note 7)		Up to the number of axes of the connected servo amplifiers (via a servo amplifier, via a CPU (Note 6), or **a link device**)			Up to 4 channels (**an external input connection connector**, via a servo amplifier, or via a CPU (Note 6))	
Speed limit function		Speed limit value, JOG speed limit value				
Torque limit function		Torque limit value same setting, torque limit value individual setting				
Forced stop function		Via a buffer memory, valid/invalid setting			**An external input connection connector** or via a buffer memory, valid/invalid setting	
Software stroke limit function		Movable range check with feed current value or with machine feed value				
Hardware stroke limit function		Provided				

Motion Module RD78G (Simple Motion Mode)

Control specifications

Items in bold: differences

Item		Specifications			Comparison with the previous models (Simple Motion modules)	
		RD78G4	**RD78G8**	**RD78G16**	RD77MS	QD77MS
Speed change function		Provided				
Override function		**0 to 300 %**				1 to 300 %
Acceleration/deceleration processing change		Acceleration/deceleration time				
Torque limit value change		Provided				
Target position change function		The target position address and the speed to the target position can be changed.				
M-code output function		WITH mode/AFTER mode				
Step function		Deceleration unit step, data No. unit step				
Skip function		Via a CPU or an external command signal				
Parameter initialization function		Provided				
External input signal select function		Via a CPU, via a servo amplifier, or **a link device**			**An external input connection connector**, via a CPU, or via a servo amplifier	
Mark detection function		Continuous detection mode, specified number of detections mode, ring buffer mode				
	Mark detection signal	**Up to the number of axes of the connected servo amplifiers**			20	4 (QD77MS2: 2 points)
	Number of mark detection settings	Up to 16				QD77MS16: up to 16 QD77MS4/QD77MS2: up to 4
Optional data monitor function		Up to 4 points/axis				
Functional safety		**Safety communication (network connection),** DI/DO connection of the servo amplifier			DI/DO connection of the servo amplifier	
Driver communication function		Provided				
Inter-module synchronization function		Provided				
Automatic return		**Provided**			Connect/disconnect function of SSCNET communication	
Digital oscilloscope function		Bit data: 16 channels (Note 5), word data: 16 channels (Note 5)				For QD77MS16, Bit data: 16 channels (Note 5), Word data: 16 channels (Note 5) For QD77MS4/QD77MS2, Bit data: 8 channels, Word data: 4 channels

Notes: 1. The helical interpolation is available with RD78G and RD77MS.
2. The number of cam registrations depends on the memory capacity, cam resolution, and number of coordinates.
3. The home position return method set in a driver (servo amplifier) is used.
4. 4-axis linear interpolation control is enabled only at the reference axis speed.
5. Eight channels of each word data and bit data can be displayed in real time.
6. Use a high-speed counter module.
7. For the compatible synchronous encoders, refer to the manuals for each controller and each servo amplifier.

Motion Module FX5-SSC-G (Simple Motion Mode)

Control specifications

Items in bold: differences

Item		Specifications		Comparison with the previous models (Simple Motion modules)	
		FX5-40SSC-G	**FX5-80SSC-G**	FX5-40SSC-S	FX5-80SSC-S
Maximum number of control axes [axis]		4	8	4	8
Command interface		**CC-Link IE TSN**		SSCNET III/H	
Servo amplifier		**MR-J5-G, MR-J5W2-G, MR-J5W3-G, MR-J5D1-G4, MR-J5D2-G4, MR-J5D3-G4**		MR-J4-B, MR-J4W2-B, MR-J4W3-B	
Operation cycle (operation cycle setting) [µs]		**500, 1000, 2000, 4000**		888, 1777	
Interpolation function		Linear interpolation (up to 4 axes), 2-axis circular interpolation			
Control method		Positioning control, path control (linear and arc), speed control, speed-torque control, synchronous control, continuous operation to torque control			
Acceleration/deceleration processing		Trapezoidal acceleration/deceleration, S-curve acceleration/deceleration			
Compensation function		Backlash compensation, electronic gear, near pass function			
Synchronous control		Synchronous encoder input, command generation axis, cam, phase compensation			
Cam control	Maximum number of cam registrations (Note 1)	**128**		64	128
	Cam data	Stroke ratio data format, coordinate data format			
	Cam auto-generation function	Cam for a rotary knife			
Positioning control method		Motion profile table			
Control unit		mm, inch, degree, pulse			
Number of positioning data		600 data (positioning data No. 1 to 600)/axis			
Backup		Parameters, positioning data, and block start data can be saved on flash ROM (batteryless backup)			
Home position return		**Driver home position return** (Note 2)		Proximity dog method, count method 1, count method 2, data set method, scale home position signal detection method, driver home position return (Note 2)	
Positioning control		Linear interpolation control (up to 4 axes (Note 3) (vector speed, reference axis speed)), fixed-pitch feed control (up to 4 axes), 2-axis circular interpolation (auxiliary point-specified, central point-specified), speed control (up to 4 axes), speed-position switching control (INC mode, ABS mode), position-speed switching control (INC mode), current value change (positioning data, start No. for a current value changing) NOP instruction, JUMP instruction (conditional, unconditional), LOOP, LEND, block start, condition start, wait start, simultaneous start, repeated start			
Manual control	JOG operation	Provided			
	Inching operation	Provided			
	Manual pulse generator operation	Up to 1 module (incremental), unit magnification (1 to 10000 times), **via a CPU** (Note 5)		Up to 1 module (incremental), unit magnification (1 to 10000 times), **an external input connection connector**	
Speed-torque control		Speed control not including position loop, torque control, continuous operation to torque control			
Absolute position system		Provided			
Synchronous encoder axis (Note 6)		Up to 4 modules (via a servo amplifier, via a CPU (Note 5), or **a link device**)		Up to 4 modules (**an external input connection connector**, via a servo amplifier, or via a CPU (Note 5))	
Speed limit function		Speed limit value, JOG speed limit value			
Torque change function		Forward/reverse torque limit value same setting, forward/reverse torque limit value individual setting			
Forced stop function		Via a buffer memory, valid/invalid setting			
Software stroke limit function		Movable range check with feed current value or with machine feed value			
Hardware stroke limit function		Provided			
Speed change function		Provided			
Override function		**0 to 300 %**		1 to 300 %	
Acceleration/deceleration processing change		Acceleration/deceleration time			
Torque limit value change		Provided			
Target position change function		The target position address and the speed to the target position can be changed.			
M-code output function		WITH mode/AFTER mode			
Step function		Deceleration unit step, data No. unit step			
Skip function		Via a CPU or an external command signal			
Parameter initialization function		Provided			

Motion Module FX5-SSC-G (Simple Motion Mode)

Control specifications

Items in bold: differences

Item		Specifications		Comparison with the previous models (Simple Motion modules)	
		FX5-40SSC-G	**FX5-80SSC-G**	FX5-40SSC-S	FX5-80SSC-S
External input signal select function		Via a CPU or a servo amplifier			
Mark detection function		Continuous detection mode, specified number of detections mode, ring buffer mode			
	Mark detection signal	**Up to the number of axes of the connected servo amplifiers**		Up to 4 points	
	Number of mark detection settings	Up to 16			
Optional data monitor function		Up to 4 points/axis			
Functional safety		DI/DO connection of the servo amplifier			
Driver communication function		**-**		Provided	
Automatic return		**Provided**		Connect/disconnect function of SSCNET communication	
Digital oscilloscope function		Bit data: 16 channels, word data: 16 channels (Note 4)			

Notes: 1. The number of cam registrations depends on the memory capacity, cam resolution, and number of coordinates.
2. The home position return method set in a driver (servo amplifier) is used.
3. 4-axis linear interpolation control is enabled only at the reference axis speed.
4. Eight channels of each word data and bit data can be displayed in real time.
5. Use the built-in high-speed counter of a CPU module or a high-speed pulse input/output module.
6. For the compatible synchronous encoders, refer to the manuals for each controller and each servo amplifier.

Motion Module (RD78G/FX5-SSC-G) (Simple Motion Mode)

Synchronous control

Item		Number of settable axes				
		RD78G4	RD78G8	RD78G16	FX5-40SSC-G	FX5-80SSC-G
Servo input axis	[axes/module]	4	8	16	4	8
Command generation axis	[axes/module]	4	8	8	4	8
Synchronous encoder axis	[axes/module]	4	8	16	4	4
Composite main shaft gear	[module/output axis]	1				
Main shaft main input axis	[module/output axis]	1				
Main shaft sub input axis	[module/output axis]	1				
Main shaft gear	[module/output axis]	1				
Main shaft clutch	[module/output axis]	1				
Auxiliary shaft	[module/output axis]	1				
Auxiliary shaft gear	[module/output axis]	1				
Auxiliary shaft clutch	[module/output axis]	1				
Composite auxiliary shaft gear	[module/output axis]	1				
Speed change gear	[module/output axis]	1				
Output axis (cam axis)	[axes/module]	4	8	16	4	8

Cam control

Item			RD78G4	RD78G8	RD78G16	FX5-40SSC-G	FX5-80SSC-G
Memory capacity	Cam storage area		256 k bytes			128 k bytes	
	Cam working area		1024 k bytes				
Maximum number of registrations	Cam storage area		256 (Note 1)			4-axis module: 64 (Note 1) 8-axis module: 128 (Note 1)	
	Cam working area		256 (Note 1)				
Comment			Up to 32 characters for each cam data				
Cam data	Stroke ratio data type	Maximum number of cam registrations (Note 2)	See table below				
		Stroke ratio	-214.7483648 to 214.7483647 %				
	Coordinate data type	Maximum number of cam registrations (Note 2)	See table below				
		Coordinate data	Input value: 0 to 2147483647 Output value: -2147483648 to 2147483647				
Cam auto-generation function			Cam for a rotary knife				

Cam resolution	256	512	1024	2048	4096	8192	16384	32768
RD78G	256	128	64	32	16	8	4	2
FX5-SSC-G	128	64	32	16	8	4	2	-

Cam resolution	128	256	512	1024	2048	4096	8192	16384
RD78G	256	128	64	32	16	8	4	2
FX5-SSC-G	128	64	32	16	8	4	2	-

Notes: 1. The maximum number of registrations depends on the memory capacity, cam resolution, and number of coordinates.
2. This is the maximum number of cam registrations for the cam storage area.

Motion Module RD78GH/RD78G (PLCopen® Motion Control FB Mode)

Control specifications

Item		RD78GH	RD78G
Maximum number of control axes		RD78GHV: 128 axes RD78GHW: 256 axes	RD78G4: 4 axes RD78G8: 8 axes RD78G16: 16 axes RD78G32: 32 axes RD78G64: 64 axes
Maximum number of connectable stations		120 stations	
Command interface		CC-Link IE TSN	
Servo amplifier		MR-J5-G, MR-J5W2-G, MR-J5W3-G, MR-J5D1-G4, MR-J5D2-G4, MR-J5D3-G4	
Operation cycle (operation cycle settings) (Note 1) [μs]		31.25, 62.5, 125, 250, 500, 1000, 2000, 4000, 8000	62.5, 125, 250, 500, 1000, 2000, 4000, 8000
Axis		Real drive axis, virtual drive axis, real encoder axis, virtual encoder axis, virtual linked axis	
	Axes group	0: Unset 1 or later: the axes group No. for the setting axis	
	Real drive axis	Servo amplifier	
	Real encoder axis	Via a servo amplifier	
Interpolation function		Linear interpolation (2 to 4 axes), 2-axis circular interpolation	
Control method		Positioning control, direct control	
Acceleration/deceleration processing		Acceleration/deceleration specification method (acceleration, deceleration, jerk), time-fixed acceleration/deceleration method	
Compensation function		Driver unit conversion	
Synchronous control	Module	Master axis, cam, gear	
	Master axis	Real drive axis, virtual drive axis, real encoder axis, virtual encoder axis, virtual linked axis	
Operation profile (cam data)	Cam data	Cam data, cam for a rotary knife	
	Motion control FB (Cam auto-generation)	Cam for a rotary knife	
Control unit		pulse, m, degree, Revolution, inch, arbitrary unit character string	
Programming language		PLC CPU: ladder diagram, function block diagram/ladder diagram, structured text language Motion module: structured text language	
Backup		Parameters and programs can be saved on a flash ROM (batteryless backup)	
Start/stop operation		Start, stop, restart, buffer mode, forced stop	
Home position return control		Driver homing method, data set type homing	
Positioning control	Linear control	Linear interpolation (2 to 4 axes)	
	2-axis circular interpolation	Border point-specified, central point-specified, radius-specified circular interpolation	
Manual control		JOG operation	
Direct control	Speed control	Speed control not including position loop, speed control including position loop	
	Torque control	Torque control, continuous operation to torque control	
Absolute position system		Provided	
Speed limit function		Speed command range	
Torque limit function		Torque limit value (positive/negative direction)	
Forced stop function		Valid/Invalid setting	
Software stroke limit		Movable range check with an address of the set position or the feed machine position.	
Hardware stroke limit		Provided	
Command speed change		Provided	
Current position change function		Provided	
Acceleration/deceleration processing change		Acceleration/deceleration, acceleration/deceleration time	
Torque limit value change		Provided	

Motion Module RD78GH/RD78G (PLCopen® Motion Control FB Mode)

Control specifications

Item	RD78GH	RD78G
Override function	Provided	
History data	Event history, position data history	
Logging	Data logging, real-time monitor	
Axis emulate	Provided	
Touch probe (mark detection)	Provided	
Monitoring of servo data	Cyclic transmission, transient transmission	
Servo system recorder	Provided	
Safety communication	Provided	
Driver communication function	Provided	
Inter-module synchronization function	Provided	

Notes: 1. The number of controllable axes varies depending on the operation cycle.

Synchronous control specifications

Perform synchronous control with a combination of function blocks.
For the function blocks to be used, refer to "Function blocks (FB) list" of this catalog.

Program capacity and operation profile (cam) specifications

Item		RD78GH	RD78G
Program/data capacity (Note 1)		Built-in ROM max. 64 [MB] + SD memory card	Built-in ROM max. 16 [MB] + SD memory card
Maximum number of cam registration		60000 (1024 out of 60000 can be set on engineering tool)	
Cam data	Cam type	Cam data, cam for a rotary knife	
	Interpolation method	Section interpolation, linear interpolation, spline interpolation	
	Profile ID	1 to 60000	
	Resolution	8 to 65535 (any resolution within the range)	
	Units for cam length per cycle	mm, inch, pulse, degree	
	Units for stroke	%, mm, inch, pulse, degree	
Cam auto-generation		Cam for a rotary knife	

Notes: 1. Total capacity including system management area. The available capacity is smaller.

Motion Module RD78GH/RD78G (PLCopen® Motion Control FB Mode)

Function blocks (FB) list

Type	Motion control FB	Name
Management FBs	MC_GroupEnable	Axes Group Enabled
	MC_GroupDisable	Axes Group Disabled
	MC_Power	Operation Available
	MC_SetPosition	Current Position Change
	MCv_SetTorqueLimit	Torque Limit Value
	MC_SetOverride	Override Value Setting
	MC_ReadParameter	Parameter Read
	MC_WriteParameter	Parameter Write
	MC_Reset	Axis Error Reset
	MC_GroupReset	Axes Group Error Reset
	MC_TouchProbe	Touch Probe Enabled
	MC_AbortTrigger	Touch Probe Disabled
	MC_CamTableSelect	Cam Table Selection
	MCv_ChangeCycle	Current Value Change per Cycle
	MCv_AllPower	All Axes Operation Available
	MC_GroupSetOverride	Axes Group Override Value Setting
	MCv_MotionErrorReset	Motion Error Reset
	MCv_AdvPositionPerCycleCalc	Advanced Synchronous Control Position per Cycle Calculation
	MCv_AdvCamSetPositionCalc	Advanced Synchronous Control Cam Set Position Calculation
Operation FBs	MC_Home	OPR
	MC_Stop	Forced Stop
	MC_GroupStop	Group Forced Stop
	MC_MoveAbsolute	Absolute Value Positioning
	MC_MoveRelative	Relative Value Positioning
	MCv_Jog	JOG
	MC_MoveVelocity	Speed Control
	MC_TorqueControl	Torque Control
	MCv_SpeedControl	Speed Control (Including Position Loop)
	MCv_MoveLinearInterpolateAbsolute	Absolute Value Linear Interpolation Control
	MCv_MoveLinearInterpolateRelative	Relative Value Linear Interpolation Control
	MCv_MoveCircularInterpolateAbsolute	Absolute Value Circular Interpolation Control
	MCv_MoveCircularInterpolateRelative	Relative Value Circular Interpolation Control
	MC_CamIn	Cam Operation Start
	MC_GearIn	Gear Operation Start
	MC_CombineAxes	Addition/Subtraction Positioning
	MCv_BacklashCompensationFilter	Backlash Compensation Filter
	MCv_SmoothingFilter	Smoothing Filter
	MCv_DirectionFilter	Moving Direction Restriction Filter
	MCv_SpeedLimitFilter	Speed Limit Filter
	MCv_AdvancedSync	Advanced Synchronous Control
	MCv_MovePositioningData	Multiple Axes Positioning Data Operation
Standard FBs	MCv_ReadProfileData	Profile Read
	MCv_WriteProfileData	Profile Write

* The number of usable function blocks depends on the program capacity.

Motion Module

CC-Link IE TSN

Item		RD78GH	RD78G	FX5-40SSC-G	FX5-80SSC-G
Communications speed		1 Gbps/100 Mbps			
Maximum number of connectable stations per network		121 stations (including the master station)		21 stations (including the master and four motion control stations)	25 stations (including the master and eight motion control stations)
Connection cable		Ethernet cable (category 5e or higher, double shielded/STP), straight cable			
Maximum distance between stations		100 m			
Maximum number of networks		239			
Topology		Line topology, star topology, coexistence of line and star topologies, ring topology (Note 1, 2)	Line topology, star topology, coexistence of line and star topologies		
Communications method		Time-sharing method			
Maximum transient transmission capacity		1920 bytes			
Maximum link points per network	RX/RY	16K points		8K points	
	RWr/RWw	8K points		1K points	
Maximum link points per station	RX/RY	16K points		8K points	
	RWr/RWw	8K points		1K points	
Safety communications	Maximum number of safety connections per station	120 connections		-	
	Maximum number of link points per safety connection	8 words (input: 8 words, output: 8 words)		-	

Notes: 1. When using ring topology to configure a system that includes the MR-J5 servo amplifier, up to 60 stations can be connected.
2. Ring topology is available in a system that is configured with CC-Link IE TSN Class B only. Ring topology is not available in a system that mixes CC-Link IE TSN Class B/A or that is configured with CC-Link IE TSN Class A only. For other restrictions, refer to "MELSEC iQ-R Motion Module User's Manual".

[Note when connecting devices]

Connect class A remote stations after class B remote stations.

CC-Link IE TSN Class

CC-Link IE TSN certifies nodes and switches to a specific class level according to its functionality and performance classification. Products can be classified as either class A or B. For the CC-Link IE TSN Class of each product, please check the CC-Link Partner Association website or the relevant product catalog or manual. Supported functions and system configuration may differ according to the CC-Link IE TSN Class of products used. For example, products compatible with class B are necessary to configure a high-speed motion control system. For details of configuring systems with both class A and class B devices, please refer to relevant master product manual.

System configuration

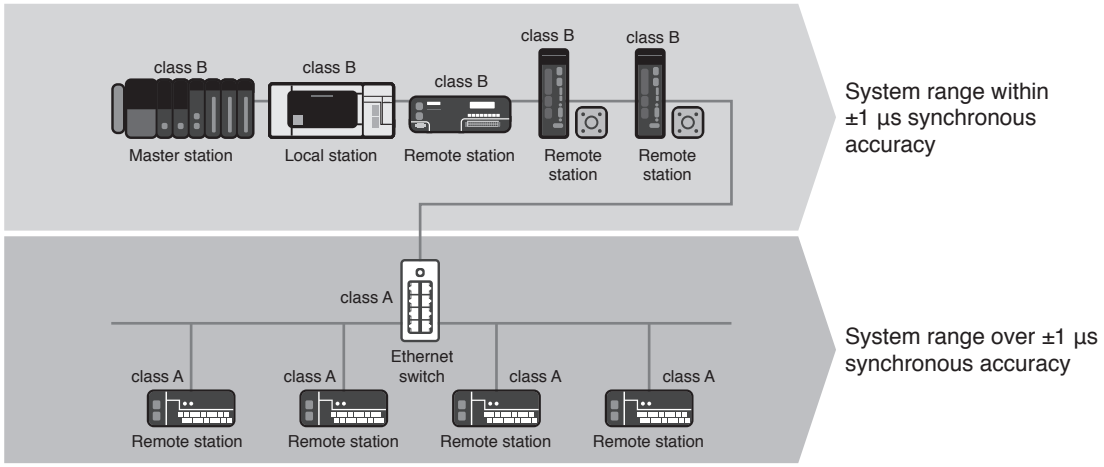

- Synchronous accuracy of a system varies relative to the combination of connected devices and switches CC-Link IE TSN Class
- Use class B Ethernet switch when configuring a star topology with class B devices
- Use class B devices when configuring a system within ±1 µs high-accuracy synchronization, connect class A devices to a separate branch line from class B devices (for details of system configuration, please refer to relevant master product manual)
- Mitsubishi Electric's block type remote modules comply both class B and A

Motion Module

Module specifications RD78GH/RD78G

Item		RD78GH	RD78G
Maximum number of control axes		RD78GHV: 128 axes RD78GHW: 256 axes	RD78G4: 4 axes RD78G8: 8 axes RD78G16: 16 axes RD78G32: 32 axes RD78G64: 64 axes
Maximum number of connectable stations		121 stations (including the master station)	
Servo amplifier connection method		CC-Link IE TSN	
CC-Link IE TSN Class		B	
Maximum distance between stations	[m]	100	
PERIPHERAL I/F		Via a CPU module (USB, Ethernet)	
Extended memory		SD memory card	
Number of ports for CC-Link IE TSN		2 ports	1 port
Number of I/O points occupied		48 points (I/O assignment: 16 points (empty slot) + 32 points)	32 points
Number of slots occupied		2 slots	1 slot
Internal current consumption (5 V DC)	[A]	2.33	1.93
Mass	[kg]	0.44	0.26
Dimensions	[mm]	106.0 (H) × 56.0 (W) × 110.0 (D)	106.0 (H) × 27.8 (W) × 110.0 (D)

Module specifications FX5-40SSC-G/FX5-80SSC-G

Item		FX5-40SSC-G	FX5-80SSC-G
Maximum number of control axes		4 axes	8 axes
Maximum number of connectable stations		21 stations (including the master and four motion control stations)	25 stations (including the master and eight motion control stations)
Servo amplifier connection method		CC-Link IE TSN	
CC-Link IE TSN Class		B	
Maximum distance between stations	[m]	100	
Maximum input current of external 24 V DC power	[A]	0.24	
Mass	[kg]	0.3	
Dimensions	[mm]	90 (H) × 50 (W) × 83 (D)	
Applicable CPU (Note 1)		FX5U, FX5UC (Note 2)	

Notes: 1. Use a CPU module with firmware version 1.230 or later.
The following CPU modules can be updated to that firmware version.
• CPU module with serial No. 17X**** or later
• FX5UC-32MT/DS-TS and FX5UC-32MT/DSS-TS with serial No. 178**** or later.
2. FX5-CNV-IFC is required to connect the Motion module to an FX5UC CPU module.

■Products on the Market

Manual Pulse Generator

Mitsubishi Electric has confirmed the operation of the following manual pulse generator. Contact the manufacturer for details.

Product name	Model	Description	Manufacturer
Manual pulse generator	RE46A2CO2B	Number of pulses per revolution: 25 pulses/rev (100 pulses/rev after magnification by 4)	Tokyo Sokuteikizai Co.,Ltd.

Motion Module

Dimensions

●RD78G4/RD78G8/RD78G16/
RD78G32/RD78G64

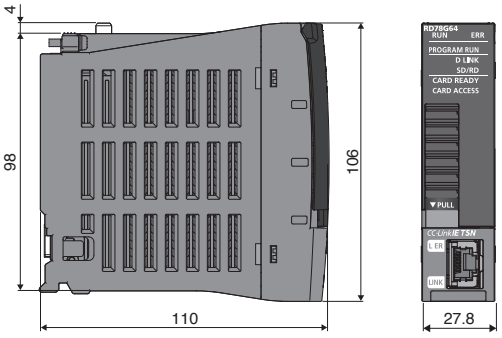

[Unit: mm]

●RD78GHV/RD78GHW

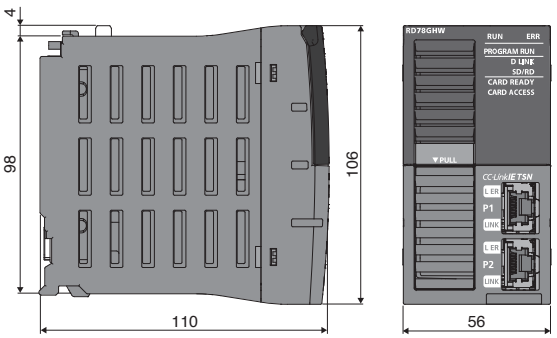

[Unit: mm]

Dimensions

●FX5-40SSC-G

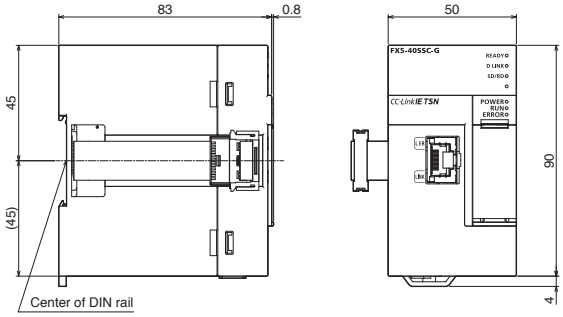

●FX5-80SSC-G

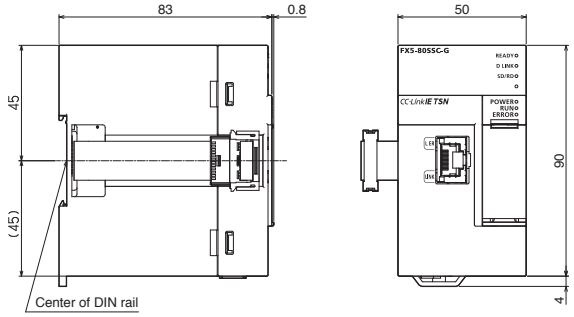

[Unit: mm]

Mounting

●RD78G4/RD78G8/RD78G16/RD78G32/RD78G64
RD78GHV/RD78GHW

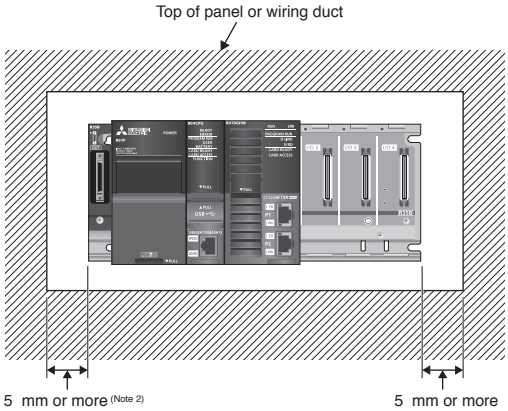

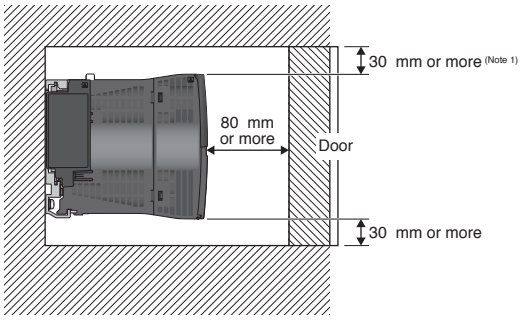

Notes: 1. Provide clearance of 30 mm or more when the height of a wiring duct is 50 mm or less. In other cases, provide clearance of 40 mm or more.
2. Provide clearance of 20 mm or more when an extension cable is connected/removed without removing a power supply module.

Engineering Software

MELSOFT GX Works3 operating environment (Note 1)

Item		Description
OS		Microsoft® Windows® 11 (Home, Pro, Enterprise, Education) Microsoft® Windows® 10 (Home, Pro, Enterprise, Education, IoT Enterprise 2016 LTSB *1, IoT Enterprise 2019 LTSC *1) *1: 64-bit version only
CPU	Windows® 11	2 or more cores on a compatible 64-bit processor or System on a Chip (SoC)
	Windows® 10	Intel® Core™ 2 Duo Processor 2 GHz or more recommended
Required memory	Windows® 11	4 GB or more recommended
	Windows® 10	64-bit OS: 2 GB or more recommended 32-bit OS: 1 GB or more recommended
Required hard disk space		For installation: 22 GB or more free hard disk space For operation: 512 MB or more free virtual memory space
Monitor		Resolution 1024 × 768 or more

Notes: 1. Refer to Installation Instructions for precautions and restrictions regarding the operating environment.

Engineering software list

Item	Model	License type	Description
MELSOFT GX Works3	SW1DND-GXW3-EC	Site license (Note 3)	• Programmable Controller Engineering Software [MELSOFT GX Works3, GX Works2, GX Developer, PX Developer]
MELSOFT iQ Works	SW2DND-IQWK-EC	Site license (Note 3)	FA engineering software (Note 1) • System Management Software [MELSOFT Navigator] • Programmable Controller Engineering Software [MELSOFT GX Works3, GX Works2, GX Developer, PX Developer] • Motion Controller Engineering Software [MELSOFT MT Works2] • Screen Design Software [MELSOFT GT Works3] • Robot Programming Software [MELSOFT RT ToolBox3 (Note 2)] • Inverter Setup Software [MELSOFT FR Configurator2] • Servo Engineering Software [MELSOFT MR Configurator2] • C Controller setting and monitoring tool [MELSOFT CW Configurator]

Notes: 1. Refer to each product manual for the software supported by the model.
2. RT ToolBox3 mini (simplified version) will be installed if iQ Works product ID is used. When RT ToolBox3 (with simulation function) is required, please purchase RT ToolBox3 product ID.
3. Anyone can use the product as long as that person belongs to the business office (including overseas offices) of the corporation that purchased the product, or to the same public vocational training facility or other educational institution as the corporation.

Motion Control Software SWM-G(-N1)

Control specifications

Item		Specifications
Maximum number of control axes (Note 1)		16, 32, 64, 128 axes
Command interface		CC-Link IE TSN EtherCAT® (Note 3)
CC-Link IE TSN Class		B
Communication cycle (operation cycle settings) [µs]		125, 250, 500, 1000, 2000, 4000, 8000
Communication specifications		Mixture of hot connect, SDO communication, and TCP/IP communication
Development environment		• Microsoft® Visual Studio® 2017, 2019, 2022 • Programming languages supported by API library: C/C++, .NET (C#, VB.NET, etc.)
Functions	Control method	Position, speed, torque
	Positioning	Up to 128 axes simultaneously (absolute value command, relative value command), override
	Acceleration/deceleration processing	Trapezoidal, S-curve, jerk ratio, parabolic, sine, time acceleration trapezoidal, etc. (24 types)
	Interpolation function	2- to 4-axis linear interpolation, 2-axis/3-axis circular interpolation, 3-axis helical interpolation, PVT
	Continuous path	Combination of linear and circular interpolation, spline interpolation, pre-read speed automatic control, linear/circular continuous path with rotation stage
	JOG operation	Provided
	Real-time control	Event, triggered motion, position synchronous output
	Synchronous control	Simple synchronization, synchronous gear ratio, synchronous phase offset, synchronous compensation, dynamic establishment/cancellation of synchronization, multiple pairs (up to 64 pairs) of synchronization between 1 axis and multiple axes (synchronous group)
	Electronic cam	Cam curves of eight systems can be defined, cam curve per communication cycle, phase operation, clutch
	Home position return (Note 2)	Home position return using the Z-phase, home position sensor, limit sensor, limit proximity sensor, external input signal, mechanical end, and gantry axis can be performed.
	I/O size	Input: 8000 bytes, output: 8000 bytes
	Compensation function	Backlash/pitch error compensation, plane strain (straightness) compensation
	Auxiliary function	Touch probe, logging

Notes: 1. The maximum number of control axes differs among the USB keys for Motion Control Software.
2. SWM-G does not support the home position return mode of the servo amplifier.
3. SWM-G-N1 is also compatible with EtherCAT®.

CC-Link IE TSN

Item	Specifications
Communications speed [bps]	1 G/100 M (Note 1, 2)
Connectable stations per network	Up to 128 stations
Connection cable	Ethernet cable (category 5e or higher, double shielded/STP), straight cable
Maximum distance between stations [m]	100
Topology (Note 3)	Line topology, star topology, coexistence of line and star topologies
Communications method	Time-sharing method
Maximum transient transmission capacity	1920 bytes

Notes: 1. When two ports are available, a 1 Gbps device and a 100 Mbps device can be assigned to each port.
2. When devices of different CC-Link IE TSN Class are mixed, the functions and performance equivalent to those of the lower CC-Link IE TSN Class are applied to part of or the entire network.
3. Use class B Ethernet switch when configuring a star topology with class B devices.

Operating environment

Item		Specifications
Personal computer		Microsoft® Windows® supported personal computer
OS		Microsoft® Windows® 11 (Pro, Enterprise, IoT Enterprise) Microsoft® Windows® 10 (Pro, Enterprise, IoT Enterprise LTSC/LTSB) (64-bit)
CPU		Intel® Atom™ 2 GHz, 4Core or higher is recommended
Memory		4 GB or more
Storage		For installation: 5 GB or more free storage space (Note 1)
Network interface (network interface cards)	SWM-G	Intel® I210, I350, I211-AT, I225, I226, etc.
	SWM-G-N1	Intel® I210, I350, I211-AT, I217LM, I218V, I219 Realtek 8168/8111, etc.

Notes: 1. SSD is recommended for the storage to be used.

Motion Control Software SWM-G(-N1)

Motion Control Software list

Product name		Model	Description
Motion Control Software (Note 1)	SWM-G	SW1DNN-SWMG-M	CC-Link IE TSN compatible • SWM-G Engine • SWM-G API • Network API • SWM-G Operating Station • MotionScope • Real Time OS (RTX64)
	SWM-G-N1	SW1DNN-SWMGN1-M	CC-Link IE TSN/EtherCAT®-compatible • SWM-G Engine • SWM-G API • Network API • SWM-G Operating Station • MotionScope • EcConfigurator • Real Time OS (RTX64)
USB key for Motion Control Software	SWM-G	MR-SWMG16-U	Maximum number of control axes: 16 axes, USB key (license)
		MR-SWMG32-U	Maximum number of control axes: 32 axes, USB key (license)
		MR-SWMG64-U	Maximum number of control axes: 64 axes, USB key (license)
		MR-SWMG128-U	Maximum number of control axes: 128 axes, USB key (license)
	SWM-G-N1	MR-SWMG16N1-U	Maximum number of control axes: 16 axes, USB key (license)
		MR-SWMG32N1-U	Maximum number of control axes: 32 axes, USB key (license)
		MR-SWMG64N1-U	Maximum number of control axes: 64 axes, USB key (license)
		MR-SWMG128N1-U	Maximum number of control axes: 128 axes, USB key (license)

Notes: 1. Download and install Motion Control Software from Mitsubishi Electric FA global website.

API Library

Simpler programming by using a dedicated library suite for access to Motion Control Software.

■ Main functions of API library

Class	Function	Description
SSCApi	StartEngine	Starts SWM-G engine.
	StopEngine	Stops SWM-G engine.
	CreateDevice	Creates a device to interface with the SWM-G engine.
	CloseDevice	Closes a device.
	StartCommunication	Starts communication with the servo network.
	StopCommunication	Stops communication with the servo network.
CoreMotion	GetStatus	Reads the current system status from SWM-G engine.
AxisControl	SetServoOn	Executes servo on or servo off.
	SetAxisCommandMode	Sets the command mode of the axis.
	GetAxisCommandMode	Obtains the command mode of the axis.
	GetPosCommand	Obtains the commanded position of the axis.
	GetPosFeedback	Obtains the feedback position of the axis.
	GetVelCommand	Obtains the commanded velocity of the axis.
	GetVelFeedback	Obtains the feedback velocity of the axis.
Config	SetParam	Sets the system parameters.
	GetParam	Obtains the system parameters.
	SetAxisParam	Sets the axis parameters.
	GetAxisParam	Obtains the axis parameters.
	Export	Exports the system and axis parameters to xml file.
	Import	Imports the system and axis parameters from xml file.
Home	StartHome	Starts home position return.
	SetCommandPos	Sets the commanded position to a specified value.
Motion	StartPos	Executes positioning (absolute position).
	StartMov	Executes positioning (relative position).
	StartLinearIntplPos	Starts linear interpolation (absolute position).
	StartLinearIntplMov	Starts linear interpolation (relative position).
	StartCircularIntplPos	Starts circular interpolation (absolute position).
	StartCircularIntplMov	Starts circular interpolation (relative position).
	StartHelicalIntplPos	Starts helical interpolation (absolute position).
	StartHelicalIntplMov	Starts helical interpolation (relative position).
	StartJog	Starts JOG operation.
	Stop	Decelerates the axis to stop.
	ExecQuickStop	Decelerates the axis to stop with Quick Stop Dec parameter.
	ExecTimedStop	Decelerates the axis to stop with the specified time.
	Wait	Executes the blocking wait command.
	Pause	Pauses the positioning operation.
	Resume	Restarts the paused positioning operation.
	OverridePos	Overrides the target position (absolute position) during positioning operation.
	OverrideMov	Overrides the target position (relative position) during positioning operation.
	OverrideProfile	Overrides the velocity pattern during positioning, JOG operation, and speed control.
	StopJogAtPos	Decelerates the axis in JOG operation to stop at the specified position.

API Library

Simpler programming by using a dedicated library suite for access to Motion Control Software.

■ Main functions of API library

Class	Function	Description
Sync	SetSyncMasterSlave	Establishes synchronization between the master and following axes.
	ResolveSync	Cancels synchronization of the specified following axes.
Velocity	StartVel	Starts speed control.
	Stop	Stops speed control.
Torque	StartTrq	Starts torque control.
	StopTrq	Stops torque control.
AdvMotion	CreatePathIntplBuffer	Assigns the buffer memory for path interpolation to an axis.
	FreePathIntplBuffer	Frees up the buffer memory for path interpolation.
	StartPathIntplPos	Starts path control (absolute position).
	StartPathIntplMov	Starts path control (relative position).
	StartPathIntpl3DPos	Starts 3D path interpolation (absolute position).
	StartPathIntpl3DMov	Starts 3D path interpolation (relative position).
AdvSync	StartECAM	Starts E-CAM control.
	StopECAM	Stops E-CAM control.
Event	SetEvent	Sets an event.
	SetSoftwareTouchProbe	Sets the parameter of the software touch probe channel.
	GetSoftwareTouchProbeStatus	Obtains the parameters and the current status of software touch probe.
	SetHardwareTouchProbe	Sets the parameters of hardware touch probe.
	GetHardwareTouchProbeStatus	Obtains the parameters and the current status of hardware touch probe.
	StartPSO	Starts the position synchronous output channel.
Io	SetOutBit	Sets the output bit values.
	SetOutByte	Sets the output byte values.
	SetOutAnalogDataShort	Sets two-byte output data.
	GetInBit	Obtains the input bit values.
	GetInByte	Obtains the input byte values.
	GetInAnalogDataShort	Obtains two-byte input data.
UserMemory	SetMBit	Sets the user memory bit values.
	SetMByte	Sets the user memory byte values.
	SetMAnalogDataShort	Sets two-byte user memory data.
	GetMBit	Obtains the user memory bit value.
	GetMByte	Obtains the user memory byte value.
	GetMAnalogDataShort	Obtains two-byte user memory data.
Log	StartLog	Starts logging data.
	StopLog	Stops logging data.
	SetLog	Specifies the data to be collected by logging operation.
CCLink	StartHotconnect	Starts the hot connect.
	SdoDownload	Downloads the SDO data of the specified remote station.
	SdoUpload	Uploads the SDO data of the specified remote station.
	SetAxisMode	Sets the control mode of the axis of the specified remote station.
	StartAxisHM	Starts HM mode control of the axis of the specified remote station.
	SlmpSendBySlaveId	Transmits SLMP to the specified remote station.

Motion Control Board MR-EM441G

Control specifications

Function		Specifications
System function	Maximum number of control axes	64 axes
	Maximum number of connectable stations	120 stations
	Operation cycle settings [μs]	62.5 (Note 1), 125, 250, 500, 1000, 2000
	Operation mode settings	High-speed operation mode, normal operation mode
Command interface		CC-Link IE TSN
Servo amplifier		MR-J5-G, MR-J5W2-G, MR-J5W3-G
Operation function	JOG operation	Provided
	Incremental feed	Provided
	Automatic operation	Point table method
	Linear interpolation	Point table method (up to 4 axes)
	Circular interpolation	Point table method (2 axes)
	Home position return	Driver home position return (the home position return method set in a servo amplifier)
	Home position reset	Provided
Application function	Electronic gear	Electronic gear numerator: 1 to 5242879 Electronic gear denominator: 1 to 589823
	Speed units	Command unit/min, command unit/s
	Acceleration/deceleration	Linear acceleration/deceleration, smoothing filter, S-curve acceleration/deceleration, jerk ratio acceleration/deceleration, vibration suppression command filter 1
	Stop	Forced stop (select the signal in the parameters), operation stop, rapid stop
		Hardware stroke limit, software stroke limit, interlock, rough match output, torque limit, command change (position/speed/time constant), backlash, position switch, absolute position detection system, other axes start, pass position interrupt, I/O device, pressure control (Note 2), continuous operation to torque control, etc.
Auxiliary function	Parameter read/write	Provided
	Alarm/system error	Provided
	Monitor	Current position, feedback position, speed command, position droop, electrical current command, alarm number, external signal status, etc.
	High speed monitor	Current position, feedback position, moving speed, feedback moving speed, external signal, electrical current feedback, position droop
	Interrupt	During start operation, operation stoppage, when alarm occurs (servo alarm/operation alarm), etc.
		User watchdog function, software reboot function, sampling, operation cycle monitor function, servo amplifier disconnect, file control, time management, link-down detection function, event history
Tandem operation		Up to 2 axes × 8 groups
Board ID		0 to 3

Notes: 1. When the operation cycle is 62.5 μs, some functions are not available.
2. Use pressure control by combining MR-EM441G with MR-J5-G-LL.

Motion control board specifications

Item	Specifications
Maximum number of control axes	64 axes
Maximum number of connectable stations	121 stations (including the master station)
Servo amplifier connection method	CC-Link IE TSN
CC-Link IE TSN Class	B
Number of CC-Link IE TSN lines	2 lines
Maximum distance between stations [m]	100
PERIPHERAL I/F	Ethernet
Number of input points	4 points
Input response time [μs]	200
Number of output points	4 points
Output response time [μs]	1
Number of Motion control boards for one personal computer	4
Bus specification	PCI Express® 2.0 × 1
Operating ambient temperature [°C]	0 to 55 (secure an air flow)
Cooling method	Air cooling (cooling fan required)
Current consumption	3.3 V DC ± 9 % 1.0 A or less 12 V DC ± 8 % 1.4 A or less
Exterior dimensions [mm]	Half-length (167.65 × 111.15)

Motion Control Board MR-EM441G

CC-Link IE TSN

Item	Specifications
Communication speed [bps]	1 G
Maximum number of connectable stations per network	121 stations (including the master station)
Connection cable	Ethernet cable (category 5e or higher, double shielded/STP), straight cable
Maximum distance between stations [m]	100
Topology (Note 1)	Line, star, line/star mixed
Communications method	Time-sharing method
Maximum transient transmission capacity	1920 bytes

Notes: 1. Use class B Ethernet switch when configuring a star topology with class B devices.

[Note when connecting devices]

The Motion control board MR-EM441G cannot be connected to the CC-Link IE TSN Class A devices.

CC-Link IE TSN Class

CC-Link IE TSN certifies nodes and switches to a specific class level according to its functionality and performance classification. Products can be classified as either class A or B. For the CC-Link IE TSN Class of each product, please check the CC-Link Partner Association website or the relevant product catalog or manual. Supported functions and system configuration may differ according to the CC-Link IE TSN Class of products used. For example, products compatible with class B are necessary to configure a high-speed motion control system. For details of configuring systems with both class A and class B devices, please refer to relevant master product manual.

System configuration

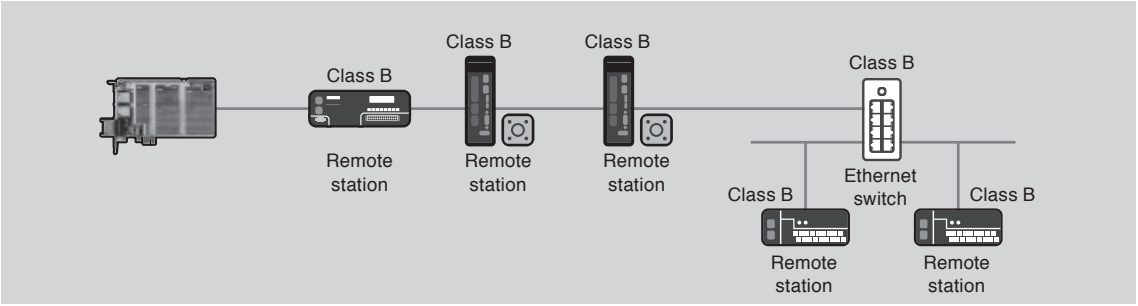

- Synchronous accuracy of a system varies relative to the combination of connected devices and switches CC-Link IE TSN Class.
- Use class B devices when configuring a system within ±1 µs high-accuracy synchronization.
- Use class B Ethernet switch when configuring a star topology with class B devices.

EM Motion SDK operating environment

Item			Specifications
Personal computer	Personal computer		Microsoft® Windows® supported personal computer
	CPU	Windows® 11	2 or more cores on a compatible 64-bit processor or System on a Chip (SoC)
		Windows® 10	Desktop PC: Intel® Celeron® processor 2.8 GHz or more recommended Laptop PC: Intel® Pentium® M processor 1.7 GHz or more recommended
	Required memory	Windows® 11	4 GB or more recommended
		Windows® 10	For 64-bit OS: 2 GB or more recommended, For 32-bit OS: 1 GB or more recommended
Required hard disk space			3 GB or more
Monitor			Resolution 1024 × 768 or more
OS			Microsoft® Windows® 11 (Pro, Enterprise, IoT Enterprise) Microsoft® Windows® 10 (Pro, Enterprise, IoT Enterprise 2016 LTSB*1) *1: Only 64-bit version is supported
Communication interface			PCI Express® bus, Ethernet port

Development environment

Item	Specifications
User program OS	Microsoft® Windows® 11 (Pro, Enterprise, IoT Enterprise) Microsoft® Windows® 10 (Pro, Enterprise, IoT Enterprise)
Software development environment	Microsoft® Visual C++® 2022/2019/2017/2015/2013/2012 Microsoft® Visual C#® 2022/2019/2017/2015/2013/2012

Motion Control Board

Dimensions

●MR-EM441G

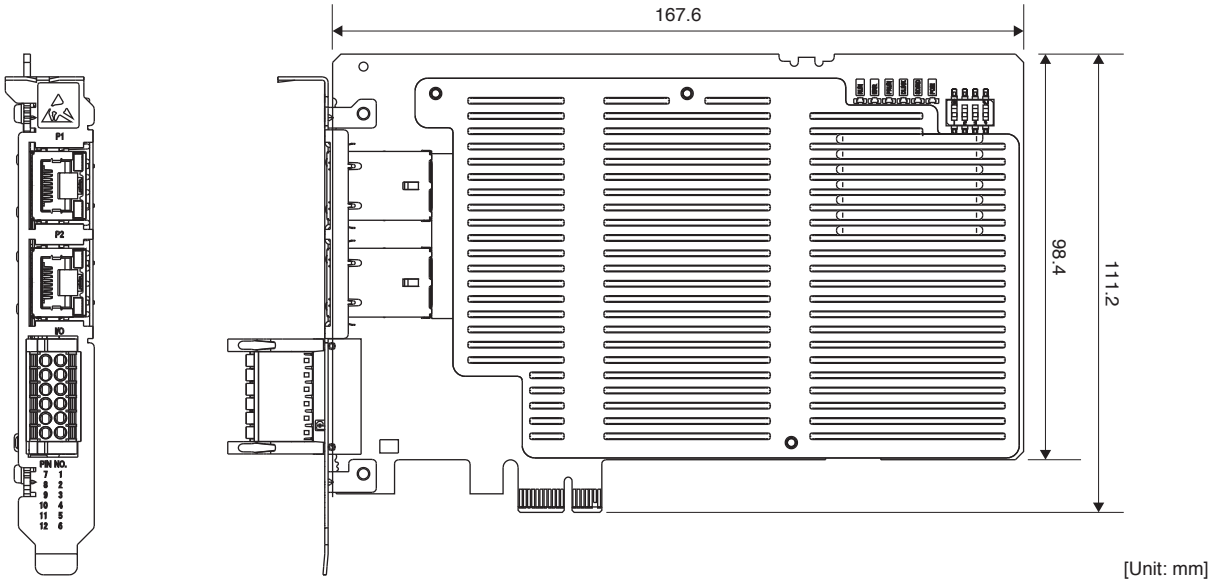

[Unit: mm]

3 Servo Amplifiers

Model Designation 3-3

MR-J5-G_ Connections with Peripheral Equipment 3-7
MR-J5-G_ Specifications 3-9
MR-J5-G_ Standard Wiring Diagram Example 3-13
Functional Safety I/O Signal Connector (CN8) Connection Example 3-16
Main/Control Circuit Power Supply Connection Example 3-17
Servo Motor Connection Example (for MR-J5-G(-N1)/MR-J5-B/MR-J5-A) 3-20
Linear Encoder Connection Example (for MR-J5-G(-N1)/MR-J5-B/MR-J5-A) 3-27
External Encoder Connection Specifications 3-29
Servo Motor Connection Example (for MR-J5-G-HS(N1)/MR-J5-G-RJ(N1)/MR-J5-B-RJ/MR-J5-A-RJ) 3-30
Linear Encoder Connection Example (for MR-J5-G-HS(N1)/MR-J5-G-RJ(N1)/MR-J5-B-RJ/MR-J5-A-RJ) 3-36
MR-J5-G_ Dimensions 3-37

MR-J5W_-G(-N1) Connections with Peripheral Equipment 3-45
MR-J5W_-G(-N1) Specifications 3-46
MR-J5W_-G(-N1) Standard Wiring Diagram Example 3-48
Main/Control Circuit Power Supply Connection Example 3-50
Servo Motor Connection Example 3-51
External Encoder Connection Specifications 3-52
Linear Encoder Connection Example 3-56
MR-J5W_-G(-N1) Dimensions 3-58

MR-J5D_-G4(-N1) Connections with Peripheral Equipment 3-60
MR-J5D_-G4(-N1) Specifications 3-61
MR-J5D_-G4(-N1) Standard Wiring Diagram Example 3-64
Main/Control Circuit Power Supply Connection Example 3-67
Servo Motor Connection Example 3-68
External Encoder Connection Specifications 3-69
Linear Encoder Connection Example 3-72
MR-J5D_-G4(-N1) Dimensions 3-73

Positioning Function 3-77
Restrictions 3-79

MR-J5-B_ Connections with Peripheral Equipment....3-80
MR-J5-B_ Specifications....3-81
MR-J5-B_ Standard Wiring Diagram Example....3-85
MR-J5-B_ Dimensions....3-86

MR-J5W_-B Connections with Peripheral Equipment....3-92
MR-J5W_-B Specifications....3-93
MR-J5W_-B Standard Wiring Diagram Example....3-95
MR-J5W_-B Dimensions....3-97

MR-J5-A_ Connections with Peripheral Equipment....3-99
MR-J5-A_ Specifications....3-100
MR-J5-A_ Standard Wiring Diagram Example....3-104
MR-J5-A_ Dimensions....3-107

MR-CM3K Specifications....3-113
MR-CM3K Wiring Diagram Example....3-114
MR-CM3K Dimensions....3-115
MR-CV_ Specifications....3-116
MR-CV_ Dimensions....3-117
Selection of Converter Unit, Servo Amplifier, and Drive Unit....3-119

G MR-J5-G(-N1) **G-HS** MR-J5-G-HS(N1) **G-RJ** MR-J5-G-RJ(N1) **WG** MR-J5W2-G(-N1)/MR-J5W3-G(-N1)
DG MR-J5D1-G4(-N1)/MR-J5D2-G4(-N1)/MR-J5D3-G4(-N1) **B** MR-J5-B **B-RJ** MR-J5-B-RJ **WB** MR-J5W2-B/MR-J5W3-B
A MR-J5-A **A-RJ** MR-J5-A-RJ

* Refer to p. 7-90 in this catalog for conversion of units.
* In this section, a term of servo amplifier includes a combination of a drive unit and a converter unit.

Model Designation for 1-Axis Servo Amplifier (Note 1)

G G-HS G-RJ

MR-J5-10G__-____

AC servo amplifier MELSERVO-J5 series

Symbol	Power supply
None	3-phase 200 V AC, 1-phase 200 V AC (Note 6), or DC input
4	3-phase 400 V AC

Symbol	Interface
G	Network compatible

Symbol	Rated output [kW]
10	0.1
20	0.2
40	0.4
60	0.6
70	0.75
100	1
200	2
350	3.5
500	5
700	7
12K	12
17K	17
25K	25

Symbol	Special specifications (Note 2, 4)
None	CC-Link IE TSN-compatible standard
HS	CC-Link IE TSN-compatible, Fully closed loop control four-wire type, Load-side encoder A/B/Z-phase input compatible, Safety sub-function, 3 points of functional safety I/O signals
RJ	CC-Link IE TSN-compatible, Fully closed loop control four-wire type, Load-side encoder A/B/Z-phase input compatible, Safety sub-function
ED	MR-J5-_G_ without a dynamic brake (Note 3)
HU	MR-J5-_G_-HS without a dynamic brake (Note 3)
RU	MR-J5-_G_-RJ without a dynamic brake (Note 3)
PX	MR-J5-_G_ without an enclosed regenerative resistor (Note 5)
HZ	MR-J5-_G_-HS without an enclosed regenerative resistor (Note 5)
LL	MR-J5-_G_ compatible with pressure control
RN	MR-J5-_G_-LL without an enclosed regenerative resistor (Note 5)
N1	EtherCAT®-compatible standard
HSN1	EtherCAT®/EtherNet/IP®-compatible, Fully closed loop control four-wire type, Load-side encoder A/B/Z-phase input compatible, Safety sub-function, 3 points of functional safety I/O signals
RJN1	EtherCAT®/EtherNet/IP®-compatible, Fully closed loop control four-wire type, Load-side encoder A/B/Z-phase input compatible, Safety sub-function
EDN1	MR-J5-_G_-N1 without a dynamic brake (Note 3)
HUN1	MR-J5-_G_-HSN1 without a dynamic brake (Note 3)
RUN1	MR-J5-_G_-RJN1 without a dynamic brake (Note 3)
PXN1	MR-J5-_G_-N1 without an enclosed regenerative resistor (Note 5)
HZN1	MR-J5-_G_-HSN1 without an enclosed regenerative resistor (Note 5)

Notes: 1. This section describes what each symbol in a model name indicates. Some combinations of symbols are not available.
2. For the servo amplifier firmware version supporting each function, refer to "MR-J5 User's Manual".
3. A dynamic brake which is built in the 7 kW or smaller servo amplifiers is removed. When the servo amplifiers without the dynamic brake are used, the servo motors coast to a stop and do not stop immediately at alarm occurrence or power failure. Take measures to ensure safety on the entire system. When specified servo motors are used, the electronic dynamic brake may activate at an alarm occurrence. The dynamic brake can be disabled with a servo parameter setting. Refer to "MR-J5 User's Manual" for details.
4. For the restrictions on the communication cycle of each function, refer to "Restrictions" in this catalog.
5. Available in 12 kW to 25 kW servo amplifiers. A regenerative resistor (standard accessory) is not enclosed. Refer to "MR-J5 User's Manual" for details.
6. A power supply of 1-phase 200 V AC is supported by 0.1 kW to 2 kW servo amplifiers.

Model Designation for 1-Axis Servo Amplifier (Note 1)

B B-RJ

M R - J 5 - 1 0 B _ - _

AC servo amplifier MELSERVO-J5 series

Symbol	Interface
B	SSCNET III/H

Symbol	Rated output [kW]
10	0.1
20	0.2
40	0.4
60	0.6
70	0.75
100	1
200	2
350	3.5
500	5
700	7
12K	12
17K	17
25K	25

Symbol	Power supply
None	3-phase 200 V AC, 1-phase 200 V AC (Note 5), or DC input
4	3-phase 400 V AC

Symbol	Special specifications
None	Standard
RJ	Fully closed loop control four-wire type, Load-side encoder A/B/Z-phase input compatible
ED	MR-J5-_B_ without a dynamic brake (Note 3)
RU	MR-J5-_B_-RJ without a dynamic brake (Note 3)
PX	MR-J5-_B_ without an enclosed regenerative resistor (Note 4)
RZ	MR-J5-_B_-RJ without an enclosed regenerative resistor (Note 4)
LL	MR-J5-_B_ compatible with pressure control
RN	MR-J5-_B_-LL without an enclosed regenerative resistor (Note 4)

M R - J 5 - 1 0 A _ - _

A A-RJ

AC servo amplifier MELSERVO-J5 series

Symbol	Interface
A	General-purpose

Symbol	Rated output [kW]
10	0.1
20	0.2
40	0.4
60	0.6
70	0.75
100	1
200	2
350	3.5
500	5
700	7
12K	12
17K	17
25K	25

Symbol	Power supply
None	3-phase 200 V AC, 1-phase 200 V AC (Note 5), or DC input
4	3-phase 400 V AC

Symbol	Special specifications (Note 2)
None	Standard
RJ	Fully closed loop control four-wire type, Load-side encoder A/B/Z-phase input compatible, High resolution analog input compatible
ED	MR-J5-_A_ without a dynamic brake (Note 3)
RU	MR-J5-_A_-RJ without a dynamic brake (Note 3)
PX	MR-J5-_A_ without an enclosed regenerative resistor (Note 4)
RZ	MR-J5-_A_-RJ without an enclosed regenerative resistor (Note 4)

Notes: 1. This section describes what each symbol in a model name indicates. Some combinations of symbols are not available.
2. For the servo amplifier firmware version supporting each function, refer to "MR-J5 User's Manual".
3. A dynamic brake which is built in the 7 kW or smaller servo amplifiers is removed. When the servo amplifiers without the dynamic brake are used, the servo motors coast to a stop and do not stop immediately at alarm occurrence or power failure. Take measures to ensure safety on the entire system. When specified servo motors are used, the electronic dynamic brake may activate at an alarm occurrence. The dynamic brake can be disabled with a servo parameter setting. Refer to "MR-J5 User's Manual" for details.
4. Available in 12 kW to 25 kW servo amplifiers. A regenerative resistor (standard accessory) is not enclosed. Refer to "MR-J5 User's Manual" for details.
5. A power supply of 1-phase 200 V AC is supported by 0.1 kW to 2 kW servo amplifiers.

Model Designation for Multi-Axis Servo Amplifier (Note 1)

WG

M R - J 5 W 2 - 2 2 G _ -

AC servo amplifier MELSERVO-J5 series

Symbol	Number of axes
W2	2 axes
W3	3 axes

Symbol	Rated output [kW]		
	A-axis (Note 2)	B-axis (Note 2)	C-axis (Note 2)
22	0.2	0.2	-
44	0.4	0.4	-
77	0.75	0.75	-
1010	1	1	-
222	0.2	0.2	0.2
444	0.4	0.4	0.4

Symbol	Interface
G	Network compatible

Symbol	Power supply
None	3-phase 200 V AC, 1-phase 200 V AC (Note 4), or DC input

Symbol	Special specifications
None	CC-Link IE TSN-compatible standard
ED	MR-J5W_-_G without dynamic brakes (Note 3)
N1	EtherCAT®/EtherNet/IP®-compatible standard
EDN1	MR-J5W_-_G-N1 without dynamic brakes (Note 3)

M R - J 5 W 2 - 2 2 B _ -

WB

AC servo amplifier MELSERVO-J5 series

Symbol	Number of axes
W2	2 axes
W3	3 axes

Symbol	Rated output [kW]		
	A-axis (Note 2)	B-axis (Note 2)	C-axis (Note 2)
22	0.2	0.2	-
44	0.4	0.4	-
77	0.75	0.75	-
1010	1	1	-
222	0.2	0.2	0.2
444	0.4	0.4	0.4

Symbol	Interface
B	SSCNET III/H

Symbol	Power supply
None	3-phase 200 V AC, 1-phase 200 V AC (Note 4), or DC input

Symbol	Special specifications
None	Standard
ED	MR-J5W_-_B without dynamic brakes (Note 3)

Notes: 1. This section describes what each symbol in a model name indicates. Some combinations of symbols are not available.
2. A-axis, B-axis, and C-axis indicate names of axes of the multi-axis servo amplifier. The C-axis is available for the 3-axis servo amplifier.
3. Dynamic brakes which are built in the servo amplifiers are removed. When the servo amplifiers without the dynamic brakes are used, the servo motors coast to a stop and do not stop immediately at alarm occurrence or power failure. Take measures to ensure safety on the entire system. When specified servo motors are used, the electronic dynamic brake may activate at an alarm occurrence. The dynamic brake can be disabled with a servo parameter setting. Refer to "MR-J5 User's Manual" for details.
4. A power supply of 1-phase 200 V AC is supported by 0.2 kW to 0.75 kW servo amplifiers.

Model Designation for Drive Unit (Note 1)

DG

M R - J 5 D 1 - 1 0 0 G 4 - _ _

AC servo amplifier MELSERVO-J5 series

Symbol	Special specifications
None	CC-Link IE TSN-compatible standard (Note 3)
ED	MR-J5D_-_G4 without dynamic brakes (Note 2)
N1	EtherCAT®/EtherNet/IP®-compatible standard (Note 3)
EDN1	MR-J5D_-_G4-N1 without dynamic brakes (Note 2)

Symbol	Power supply
4	3-phase 400 V AC

Symbol	Interface
G	Network compatible

Symbol	Rated output [kW]		
	A-axis (Note 4)	B-axis (Note 4)	C-axis (Note 4)
100	1	1	1
200	2	2	2
350	3.5	3.5	-
500	5	5	-
700	7	7	-

Symbol	Number of axes
D1	1 axis
D2	2 axes
D3	3 axes

A converter unit (MR-CV_4) is required for a drive unit.

Model Designation for Simple Converter

G | G-RJ | WG | B | B-RJ | WB | A | A-RJ

M R - C M 3 K _

Symbol	Power supply
None	3-phase 200 V AC

Symbol	Rated output [kW]
3K	3

Model Designation for Power Regeneration Converter Unit

DG

M R - C V 1 1 K 4

Symbol	Power supply
4	3-phase 400 V AC

Symbol	Capacity [kW]
11K	11
18K	18
30K	30
37K	37
45K	45
55K	55
75K	75

Notes: 1. This section describes what each symbol in a model name indicates. Some combinations of symbols are not available.
2. A dynamic brake which is built in the drive units is removed. When the drive units without the dynamic brake are used, the servo motors coast to a stop and do not stop immediately at alarm occurrence or power failure. Take measures to ensure safety on the entire system. When specified servo motors are used, the electronic dynamic brake may activate at an alarm occurrence. The dynamic brake can be disabled with a servo parameter setting. Refer to "MR-J5D User's Manual" for details.
3. MR-J5D1-G4(-N1) supports fully closed loop control four-wire type input and the load-side encoder A/B/Z-phase input as standard.
4. A-axis, B-axis, and C-axis indicate names of axes of the multi-axis drive unit. The B-axis is available for the 2-axis drive unit and the 3-axis drive unit. The C-axis is available for the 3-axis drive unit.

MR-J5-G(4)(-(RJ)(N1)) Connections with Peripheral Equipment (Note 1)

G G-RJ

Peripheral equipment is connected to MR-J5-G(4)(-(RJ)(N1)) as described below. Connectors, cables, options, and other necessary equipment are available so that users can set up the servo amplifier easily and start using it right away.

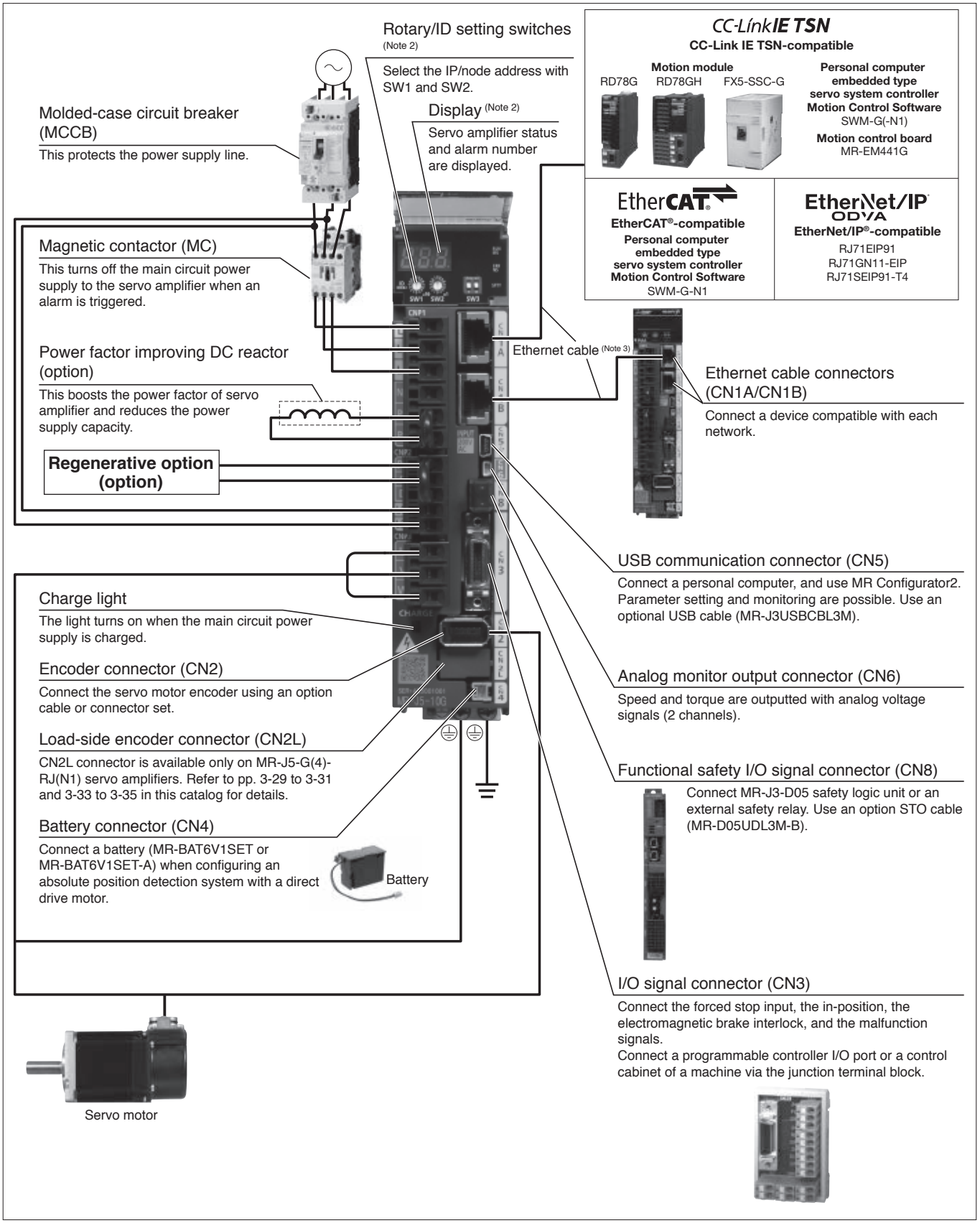

Notes: 1. The connection with the peripheral equipment is an example for MR-J5-350G(4)(-(RJ)(N1)) or smaller servo amplifiers. Refer to "MR-J5 User's Manual" for the actual connections.
2. This picture shows the display cover open.
3. For specifications of the Ethernet cable, refer to "Ethernet Cable Specifications" in this catalog.

MR-J5-G(4)-HS(N1) Connections with Peripheral Equipment (Note 1)

G-HS

Peripheral equipment is connected to MR-J5-G(4)-HS(N1) as described below. Connectors, cables, options, and other necessary equipment are available so that users can set up the servo amplifier easily and start using it right away.

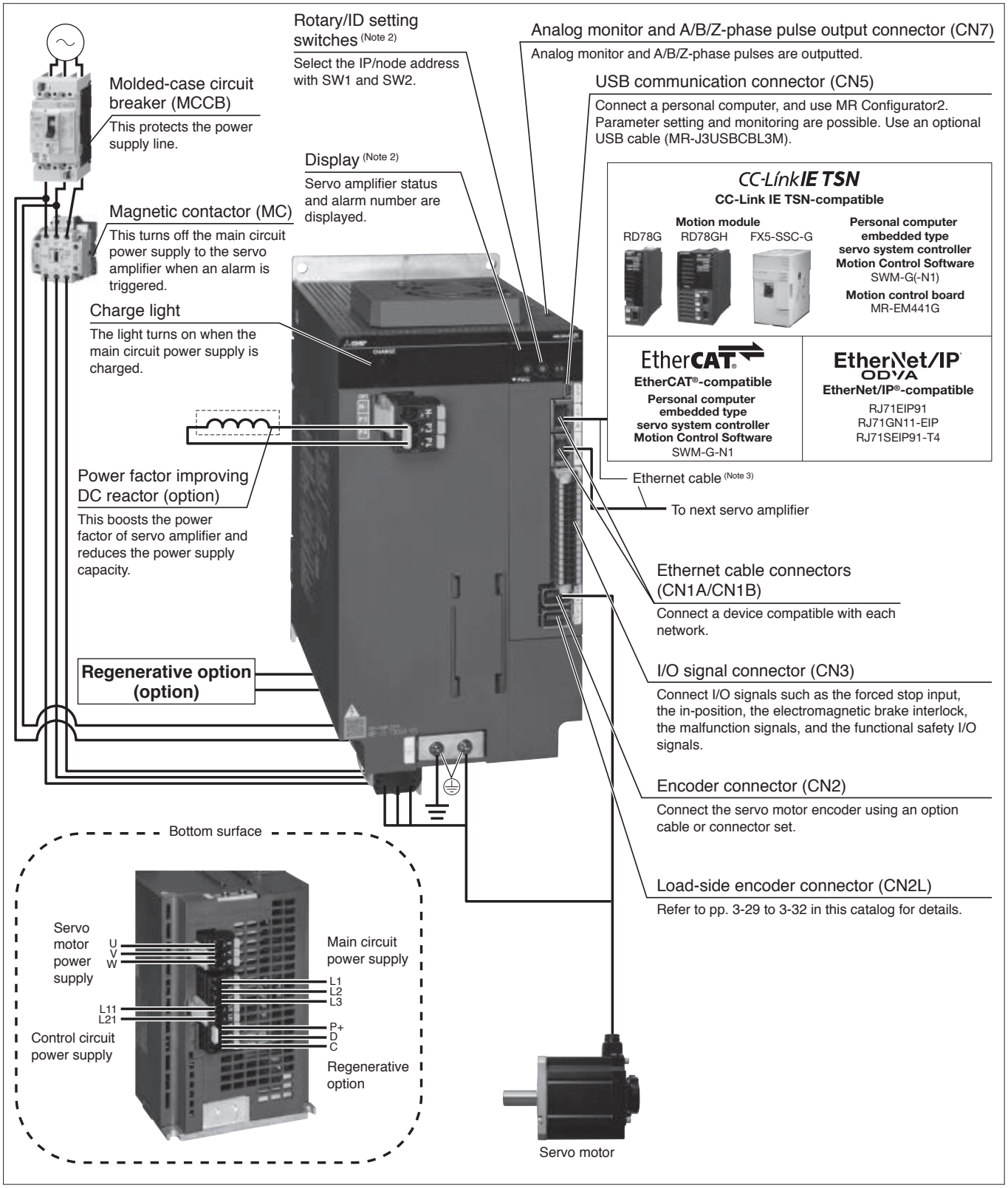

Notes: 1. The connection with the peripheral equipment is an example for MR-J5-700G4-HS(N1) or smaller servo amplifiers. Refer to "MR-J5 User's Manual" for the actual connections.
2. This picture shows the display cover closed.
3. For specifications of the Ethernet cable, refer to "Ethernet Cable Specifications" in this catalog.

MR-J5-G_ (Network Compatible) Specifications (200 V)

G G-HS G-RJ

Servo amplifier model	MR-J5-_(-(RJ)(N1))		10G	20G	40G	60G	70G	100G	200G	350G	500G	700G	-	-	-
	MR-J5-_(-(HS)(N1))		-	-	-	-	-	-	-	-	-	-	12KG	17KG	25KG
Output	Voltage		3-phase 0 V AC to 240 V AC												
	Rated current	[A]	1.3	1.8	2.8	3.2	5.8	6.0	11.0	17.0	28.0	37.0	68.0	87.0	126.0
Main circuit power supply input	Voltage/ frequency (Note 1)	AC input	3-phase or 1-phase 200 V AC to 240 V AC, 50 Hz/60 Hz					3-phase or 1-phase 200 V AC to 240 V AC, 50 Hz/60 Hz (Note 7)		3-phase 200 V AC to 240 V AC, 50 Hz/60 Hz					
		DC input (Note 8)	283 V DC to 340 V DC												
	Rated current [A] (Note 6)	AC input	0.9 (1.5)	1.5 (2.5)	2.6 (4.5)	3.2 (5.0)	3.8 (6.5)	5.0 (10.5)	10.5 (15.8)	16.0	21.7	28.9	52.0	72.2	109.7
		DC input	1.1	1.8	3.2	3.5	4.6	6.0	12.4	19.4	26.5	38.9	63.6	77.7	132.9
	Permissible voltage fluctuation	AC input	3-phase or 1-phase 170 V AC to 264 V AC					3-phase or 1-phase 170 V AC to 264 V AC (Note 7)		3-phase 170 V AC to 264 V AC					
		DC input (Note 8)	241 V DC to 374 V DC												
	Permissible frequency fluctuation		±5 % maximum												
Control circuit power supply input	Voltage/ frequency	AC input	1-phase 200 V AC to 240 V AC, 50 Hz/60 Hz												
		DC input (Note 8)	283 V DC to 340 V DC												
	Rated current	[A]	0.2								0.3				
	Permissible voltage fluctuation	AC input	1-phase 170 V AC to 264 V AC												
		DC input (Note 8)	241 V DC to 374 V DC												
	Permissible frequency fluctuation		±5 % maximum												
	Power consumption	[W]	30										45		
Interface power supply			24 V DC ± 10 % (required current capacity: 0.3 A (including CN8 connector signals))												
Control method			Sine-wave PWM control/current control method												
Permissible regenerative power	Built-in regenerative resistor (Note 2, 3)	[W]	-	10			30		100		130	170	-		
	External regenerative resistor (standard accessory) (Note 2, 3, 19, 20)	[W]	-										500 (800)	850 (1300)	
Dynamic brake (Note 4)			Built-in										External option (Note 16, 18)		
CC-Link IE TSN Class B (Note 13)	Communication cycle (Note 10, 12)	MR-J5-G(-HS)/ MR-J5-G(-RJ)	31.25 µs, 62.5 µs, 125 µs, 250 µs, 500 µs, 1 ms, 1.5 ms, 2 ms, 2.5 ms, 3 ms, 3.5 ms, 4 ms, 4.5 ms, 5 ms, 5.5 ms, 6 ms, 6.5 ms, 7 ms, 7.5 ms, 8 ms												
		MR-J5-G-LL	125 µs, 250 µs, 500 µs, 1 ms, 1.5 ms, 2 ms, 2.5 ms, 3 ms, 3.5 ms, 4 ms, 4.5 ms, 5 ms, 5.5 ms, 6 ms, 6.5 ms, 7 ms, 7.5 ms, 8 ms												
	Protocol version		1.0/2.0 (Note 5)												
CC-Link IE TSN Class A (Note 5, 13, 14) (MR-J5-G(-HS)/ MR-J5-G(-RJ))	Communication cycle (Note 10)		500 µs to 500 ms												
	Protocol version		2.0												
EtherCAT® (MR-J5-G(-HS)N1/ MR-J5-G(-RJ)N1)	Communication cycle (Note 10, 12)		125 µs, 250 µs, 500 µs, 1 ms, 2 ms, 4 ms, 8 ms												
EtherNet/IP® (Note 14) (MR-J5-G-HSN1/ MR-J5-G-RJN1)	Cycle time		Select from 1 ms to 100 ms												
CC-Link IE Field Network Basic (Note 5, 14)	MR-J5-G(-HS)/ MR-J5-G(-RJ)		Supported												
	MR-J5-G-LL		Not supported												
Communication function	USB		Connect a personal computer (MR Configurator2 compatible)												
Encoder output pulse	MR-J5-G(-(HS)(N1))/ MR-J5-G(-(RJ)(N1))		Compatible (A/B/Z-phase pulse)												
	MR-J5-G-LL		Not compatible												
Analog monitor			2 channels												
Positioning mode (Note 5, 12)			Point table method												

MR-J5-G_ (Network Compatible) Specifications (200 V)

G G-HS G-RJ

Servo amplifier model	MR-J5-_(-(RJ)(N1))	10G	20G	40G	60G	70G	100G	200G	350G	500G	700G	-	-	-
	MR-J5-_(-(HS)(N1))	-	-	-	-	-	-	-	-	-	-	12KG	17KG	25KG
Digital I/O	MR-J5-G(-(HS)(N1))/ MR-J5-G(-(RJ)(N1))	DI 6 points, DO 3 points												
	MR-J5-G-LL	DI 5 points, DO 3 points												
Fully closed loop control (Note 5, 12)	MR-J5-G(-(HS)(N1))/ MR-J5-G(-(RJ)(N1))	Supported												
	MR-J5-G-LL	Not supported												
Scale measurement function (Note 5, 12)	MR-J5-G(-(HS)(N1))/ MR-J5-G(-(RJ)(N1))	Supported												
	MR-J5-G-LL	Not supported												
Load-side encoder interface	MR-J5-G(-N1)	Mitsubishi Electric high-speed serial communication												
	MR-J5-G-HS(N1)/ MR-J5-G-RJ(N1)	Mitsubishi Electric high-speed serial communication, A/B/Z-phase differential input signal												
	MR-J5-G-LL	Not supported												
Pressure control	MR-J5-G(-HS)/ MR-J5-G(-RJ)	Not supported												
	MR-J5-G-LL: Pressure feedback voltage	0 V to 10 V												
	MR-J5-G-LL: Pressure feedback cycle	One-point mode: 62.5 µs												
	MR-J5-G-LL: Cyclic synchronous pressure mode	Basic mode, pressure model adaptive mode												
Servo functions		Advanced vibration suppression control II, adaptive filter II, robust filter, quick tuning, auto tuning, one-touch tuning, tough drive function, drive recorder function, machine diagnosis function (including failure prediction), power monitoring function, lost motion compensation function, super trace control (Note 5), continuous operation to torque control mode (Note 5, 12, 15), driver communication function (Note 5, 12, 15)												
Protective functions		Overcurrent shut-off, regenerative overvoltage shut-off, overload shut-off (electronic thermal), servo motor overheat protection, encoder error protection, regenerative error protection, undervoltage protection, instantaneous power failure protection, overspeed protection, error excessive protection, magnetic pole detection protection, linear servo control fault protection												
Safety sub-function, Safety performance		Refer to "Safety Sub-Functions" in section 1 of this catalog.												
Structure (IP rating)		Natural cooling, open (IP20)				Force cooling, open (IP20)				Force cooling, open (IP20) (Note 9)		Force cooling, open (IP20) (Note 17, 21)		
Close mounting	3-phase power supply input	Possible (Note 11)										Not possible		
	1-phase power supply input	Possible (Note 11)					Not possible		-					
Mass [kg]		0.8		1.0	1.4			2.2		3.7	6.2	12.7		18.1

Notes:
1. Rated output and speed of a rotary servo motor and a direct drive motor; and continuous thrust and maximum speed of a linear servo motor are applicable when the servo amplifier is operated within the specified power supply voltage and frequency.
2. Select the most suitable regenerative option for your system with our Drive System Sizing Software Motorizer.
3. Refer to "Regenerative Option" in this catalog for the permissible regenerative power [W] when a regenerative option is used.
4. When using the dynamic brake, refer to "MR-J5 User's Manual" for the permissible load to motor inertia ratio and the permissible load to mass ratio.
5. For the servo amplifier firmware version supporting each function, refer to "MR-J5 User's Manual".
6. The values in brackets are the rated current for the 1-phase power supply input.
7. When the servo amplifier is used with a 1-phase power supply and combined with a servo motor of over 750 W, use the servo amplifiers at 75 % or less of the effective load ratio.
8. For a connection example of power supply circuit with DC input, refer to "MR-J5 User's Manual".
9. The connector part is excluded.
10. The communication cycle depends on the controller specifications and the number of device stations connected.
11. When the servo amplifiers are closely mounted, keep the ambient temperature within 0 °C to 45 °C, or use the servo amplifiers at 75 % or less of the effective load ratio.
12. For the restrictions on the communication cycle, refer to "Restrictions" in this catalog.
13. A communication speed of 1 Gbps/100 Mbps can be selected. When 100 Mbps is selected, the minimum communication cycle is 500 µs.
14. For the restrictions on the network, refer to "MR-J5 User's Manual".
15. The function is not available with MR-J5-G-N1, MR-J5-G-HSN1, and MR-J5-G-RJN1.
16. Use an external dynamic brake with the 12 kW or larger servo amplifiers. Failure to do so will cause an accident because the servo motor does not stop immediately but coasts at emergency stop. Ensure the safety in the entire equipment.
17. This product is certified as IP00.
18. The external dynamic brake cannot be used to comply with the SEMI-F47 standard. Do not assign DB (Dynamic brake interlock) to the output device. If DB (Dynamic brake interlock) is assigned, the servo amplifier switches to servo-off status when an instantaneous power failure occurs.
19. The values in brackets are applicable when cooling fans (two units of 92 mm × 92 mm, minimum air flow: 1.0 m^3/min) are installed, and then [Pr. PA02] is changed.
20. Servo amplifiers without an enclosed regenerative resistor are also available. Refer to "Model Designation for 1-Axis Servo Amplifier" in this catalog for details.
21. Terminal blocks are excluded.

MR-J5-G_ (Network Compatible) Specifications (400 V)

G G-HS G-RJ

Servo amplifier model		MR-J5-_(-(RJ)(N1))	60G4	100G4	200G4	350G4	-	-	-	-	-
		MR-J5-_(-(HS)(N1))	60G4	100G4	200G4	350G4	500G4	700G4	12KG4	17KG4	25KG4
Output	Voltage		3-phase 0 V AC to 480 V AC								
	Rated current	[A]	1.6	2.8	5.5	8.6	14	17	32.0	41.0	63.0
Main circuit power supply input	Voltage/frequency (Note 1)	AC input	3-phase 380 V AC to 480 V AC, 50 Hz/60 Hz								
	Rated current	[A]	1.4	2.5	5.1	7.9	10.8	14.4	26.0	36.1	54.8
	Permissible voltage fluctuation	AC input	3-phase 323 V AC to 528 V AC								
	Permissible frequency fluctuation		±5 % maximum								
Control circuit power supply input	Voltage/frequency	AC input	1-phase 380 V AC to 480 V AC, 50 Hz/60 Hz								
	Rated current	[A]	0.1				0.2				
	Permissible voltage fluctuation	AC input	1-phase 323 V AC to 528 V AC								
	Permissible frequency fluctuation		±5 % maximum								
	Power consumption	[W]	30				45				
Interface power supply			24 V DC ± 10 % (required current capacity: 0.3 A (including CN8 connector signals))								
Control method			Sine-wave PWM control/current control method								
Permissible regenerative power	Built-in regenerative resistor (Note 2, 3)	[W]	15		100	120	130	170	-		
	External regenerative resistor (standard accessory) (Note 2, 3, 14, 15)	[W]	-						500 (800)	850 (1300)	
Dynamic brake (Note 4)			Built-in						External option (Note 11, 13)		
CC-Link IE TSN Class B (Note 7)	Communication cycle (Note 5, 6)	MR-J5-G4(-HS)/ MR-J5-G4(-RJ)	31.25 µs, 62.5 µs, 125 µs, 250 µs, 500 µs, 1 ms, 1.5 ms, 2 ms, 2.5 ms, 3 ms, 3.5 ms, 4 ms, 4.5 ms, 5 ms, 5.5 ms, 6 ms, 6.5 ms, 7 ms, 7.5 ms, 8 ms								
		MR-J5-G4-LL	125 µs, 250 µs, 500 µs, 1 ms, 1.5 ms, 2 ms, 2.5 ms, 3 ms, 3.5 ms, 4 ms, 4.5 ms, 5 ms, 5.5 ms, 6 ms, 6.5 ms, 7 ms, 7.5 ms, 8 ms								
	Protocol version		1.0/2.0 (Note 9)								
CC-Link IE TSN Class A (Note 7, 8, 9) (MR-J5-G4(-HS)/ MR-J5-G4(-RJ))	Communication cycle (Note 5)		500 µs to 500 ms								
	Protocol version		2.0								
EtherCAT® (MR-J5-G4(-HS)N1/ MR-J5-G4(-RJ)N1)	Communication cycle (Note 5, 6)		125 µs, 250 µs, 500 µs, 1 ms, 2 ms, 4 ms, 8 ms								
EtherNet/IP® (Note 8) (MR-J5-G4-HSN1/ MR-J5-G4-RJN1)	Cycle time		Select from 1 ms to 100 ms								
CC-Link IE Field Network Basic (Note 8, 9)	MR-J5-G4(-HS)/ MR-J5-G4(-RJ)		Supported								
	MR-J5-G4-LL		Not supported								
Communication function	USB		Connect a personal computer (MR Configurator2 compatible)								
Encoder output pulse	MR-J5-G4(-(HS)(N1))/ MR-J5-G4(-(RJ)(N1))		Compatible (A/B/Z-phase pulse)								
	MR-J5-G4-LL		Not compatible								
Analog monitor			2 channels								
Positioning mode (Note 6, 9)			Point table method								

MR-J5-G_ (Network Compatible) Specifications (400 V)

G G-HS G-RJ

Servo amplifier model	MR-J5-_(-(RJ)(N1))	60G4	100G4	200G4	350G4	-	-	-	-	-
	MR-J5-_(-(HS)(N1))	60G4	100G4	200G4	350G4	500G4	700G4	12KG4	17KG4	25KG4
Digital I/O	MR-J5-G4(-(HS)(N1))/ MR-J5-G4(-(RJ)(N1))	DI 6 points, DO 3 points								
	MR-J5-G4-LL	DI 5 points, DO 3 points								
Fully closed loop control (Note 6)	MR-J5-G4(-(HS)(N1))/ MR-J5-G4(-(RJ)(N1))	Supported								
	MR-J5-G4-LL	Not supported								
Scale measurement function (Note 6)	MR-J5-G4(-(HS)(N1))/ MR-J5-G4(-(RJ)(N1))	Supported								
	MR-J5-G4-LL	Not supported								
Load-side encoder interface	MR-J5-G4(-N1)	Mitsubishi Electric high-speed serial communication								
	MR-J5-G4-HS(N1)/ MR-J5-G4-RJ(N1)	Mitsubishi Electric high-speed serial communication, A/B/Z-phase differential input signal								
	MR-J5-G4-LL	Not supported								
Pressure control	MR-J5-G4(-(HS)(N1))/ MR-J5-G4(-(RJ)(N1))	Not supported								
	MR-J5-G4-LL: Pressure feedback voltage	0 V to 10 V								
	MR-J5-G4-LL: Pressure feedback cycle	One-point mode: 62.5 µs								
	MR-J5-G4-LL: Cyclic synchronous pressure mode	Basic mode, pressure model adaptive mode								
Servo functions		Advanced vibration suppression control II, adaptive filter II, robust filter, quick tuning, auto tuning, one-touch tuning, tough drive function, drive recorder function, machine diagnosis function (including failure prediction), power monitoring function, lost motion compensation function, super trace control, continuous operation to torque control mode (Note 6, 10), driver communication function (Note 6, 9, 10)								
Protective functions		Overcurrent shut-off, regenerative overvoltage shut-off, overload shut-off (electronic thermal), servo motor overheat protection, encoder error protection, regenerative error protection, undervoltage protection, instantaneous power failure protection, overspeed protection, error excessive protection, magnetic pole detection protection, linear servo control fault protection								
Safety sub-function, Safety performance		Refer to "Safety Sub-Functions" in section 1 of this catalog.								
Structure (IP rating)		Natural cooling, open (IP20) (Note 17)		Force cooling, open (IP20) (Note 17)		Force cooling, open (IP20)		Force cooling, open (IP20) (Note 12, 16)		
Close mounting		Not possible								
Mass	[kg]	1.6		2.2	2.3	5.2	5.4	12.7		18.1

Notes:
1. Rated output and speed of a rotary servo motor are applicable when the servo amplifier is operated within the specified power supply voltage and frequency.
2. Select the most suitable regenerative option for your system with our Drive System Sizing Software Motorizer.
3. Refer to "Regenerative Option" in this catalog for the permissible regenerative power [W] when a regenerative option is used.
4. When using the dynamic brake, refer to "MR-J5 User's Manual" for the permissible load to motor inertia ratio.
5. The communication cycle depends on the controller specifications and the number of device stations connected.
6. For the restrictions on the communication cycle, refer to "Restrictions" in this catalog.
7. A communication speed of 1 Gbps/100 Mbps can be selected. When 100 Mbps is selected, the minimum communication cycle is 500 µs.
8. For the restrictions on the network, refer to "MR-J5 User's Manual".
9. For the servo amplifier firmware version supporting each function, refer to "MR-J5 User's Manual".
10. The function is not available with MR-J5-G4-N1, MR-J5-G4-HSN1, and MR-J5-G4-RJN1.
11. Use an external dynamic brake with the 12 kW or larger servo amplifiers. Failure to do so will cause an accident because the servo motor does not stop immediately but coasts at emergency stop. Ensure the safety in the entire equipment.
12. This product is certified as IP00.
13. The external dynamic brake cannot be used to comply with the SEMI-F47 standard. Do not assign DB (Dynamic brake interlock) to the output device. If DB (Dynamic brake interlock) is assigned, the servo amplifier switches to servo-off status when an instantaneous power failure occurs.
14. The values in brackets are applicable when cooling fans (two units of 92 mm × 92 mm, minimum air flow: 1.0 m^3/min) are installed, and then [Pr. PA02] is changed.
15. Servo amplifiers without an enclosed regenerative resistor are also available. Refer to "Model Designation for 1-Axis Servo Amplifier" in this catalog for details.
16. Terminal blocks are excluded.
17. MR-J5-60G4-HS(N1) to MR-J5-350G4-HS(N1) are certified as IP00.

MR-J5-G(4)(-(RJ)(N1)) Standard Wiring Diagram Example

G G-RJ

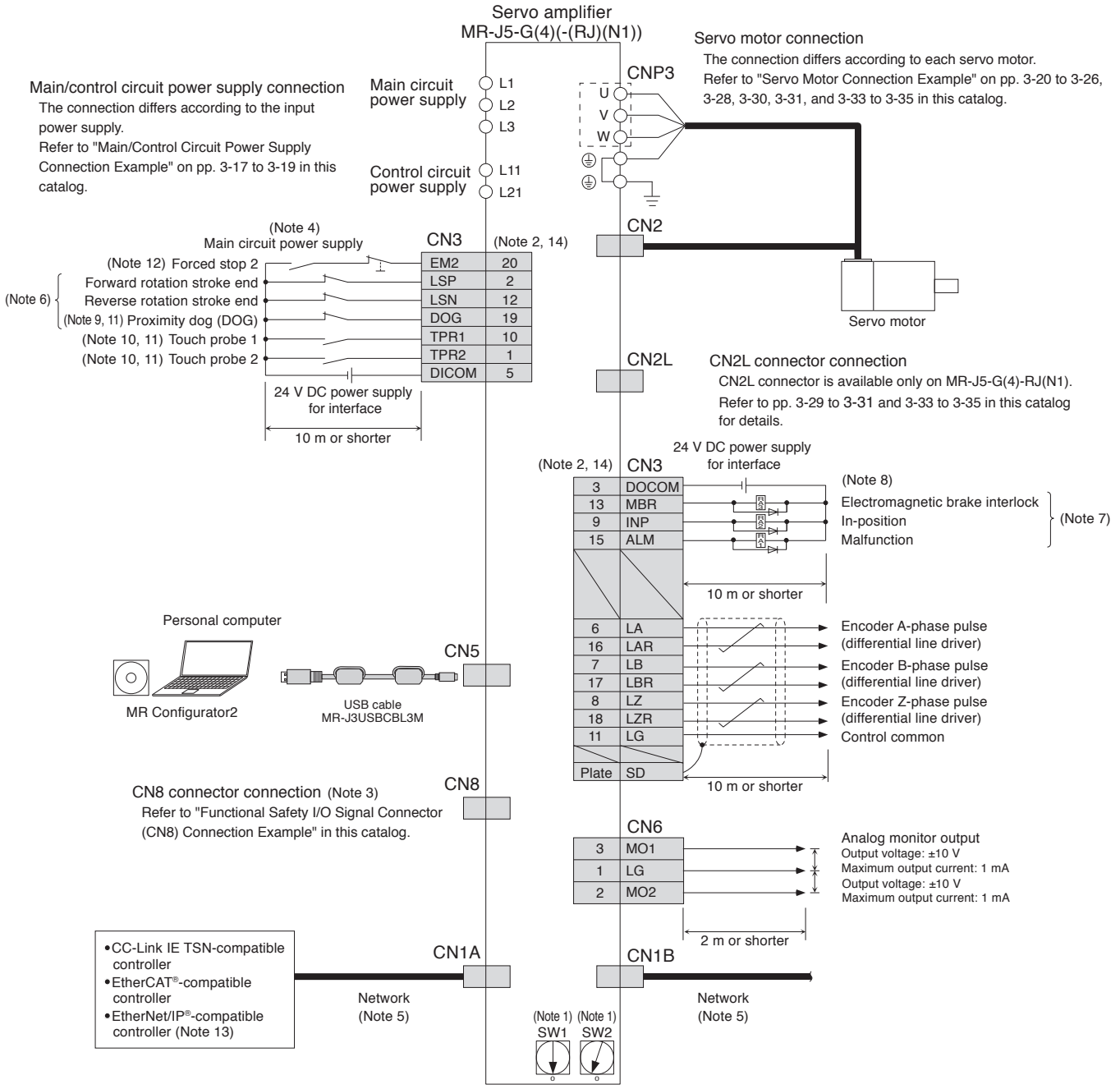

Notes:
1. The node address or the 4th octet of the IP address can be set to between 1 and 254 with a combination of the ID setting switches or the rotary switches (SW1 and SW2). Note that the number of the connectable device stations depends on the controller specifications.
2. This is for sink wiring. Source wiring is also possible.
3. Attach a short-circuit connector supplied with the servo amplifier when the functional safety (STO function) is not used.
4. To prevent an unexpected restart of the servo amplifier, create a circuit to turn off EM2 (Forced stop 2) when the main circuit power is turned off.
5. When branching off CC-Link IE TSN (synchronous communication function) with a switching hub, use a switching hub (class B) recommended by CC-Link Partner Association. When a switching hub (class A) is used, there are restrictions on the topologies to be used. Refer to the controller manual for details.
6. Devices for these pins can be changed with [Pr. PD03], [Pr. PD04], and [Pr. PD05].
7. Devices for these pins can be changed with [Pr. PD07], [Pr. PD08], and [Pr. PD09].
8. When using a linear servo motor or direct drive motor, use MBR (Electromagnetic brake interlock) for an external brake mechanism.
9. For MR-J5-G(4)-RJ(N1), this device can be changed to TPR3 (Touch probe 3) with [Pr. PD05]. When TPR3 is set, connect by using a normally open contact switch as the same as TPR1 (Touch probe 1) and TPR2 (Touch probe 2).
10. For MR-J5-G(4)(-N1), use the servo amplifiers with firmware version C0 or later and manufactured in June 2021 or later.
11. For the restrictions on the communication cycle of the touch probe function, refer to "Restrictions" in this catalog.
12. The forced stop signal is issued for the servo amplifier. For overall system, apply the emergency stop on the controller side.
13. EtherNet/IP® is supported by MR-J5-G(4)-RJN1.
14. The frame of the CN3 connector is not connected to the protective earth (PE) terminal. Using a cable clamp fitting (AERSBAN-_SET) or shield connection clamp (SCC 15-F) for grounding is recommended as necessary. For details of AERSBAN-_SET and SCC 15-F, refer to "MR-J5 User's Manual".

Be sure to read through User's Manual for the actual wiring and use. Use the equipment after you have a full knowledge of the equipment, safety information and instructions.

MR-J5-G(4)-HS(N1) Standard Wiring Diagram Example

G-HS

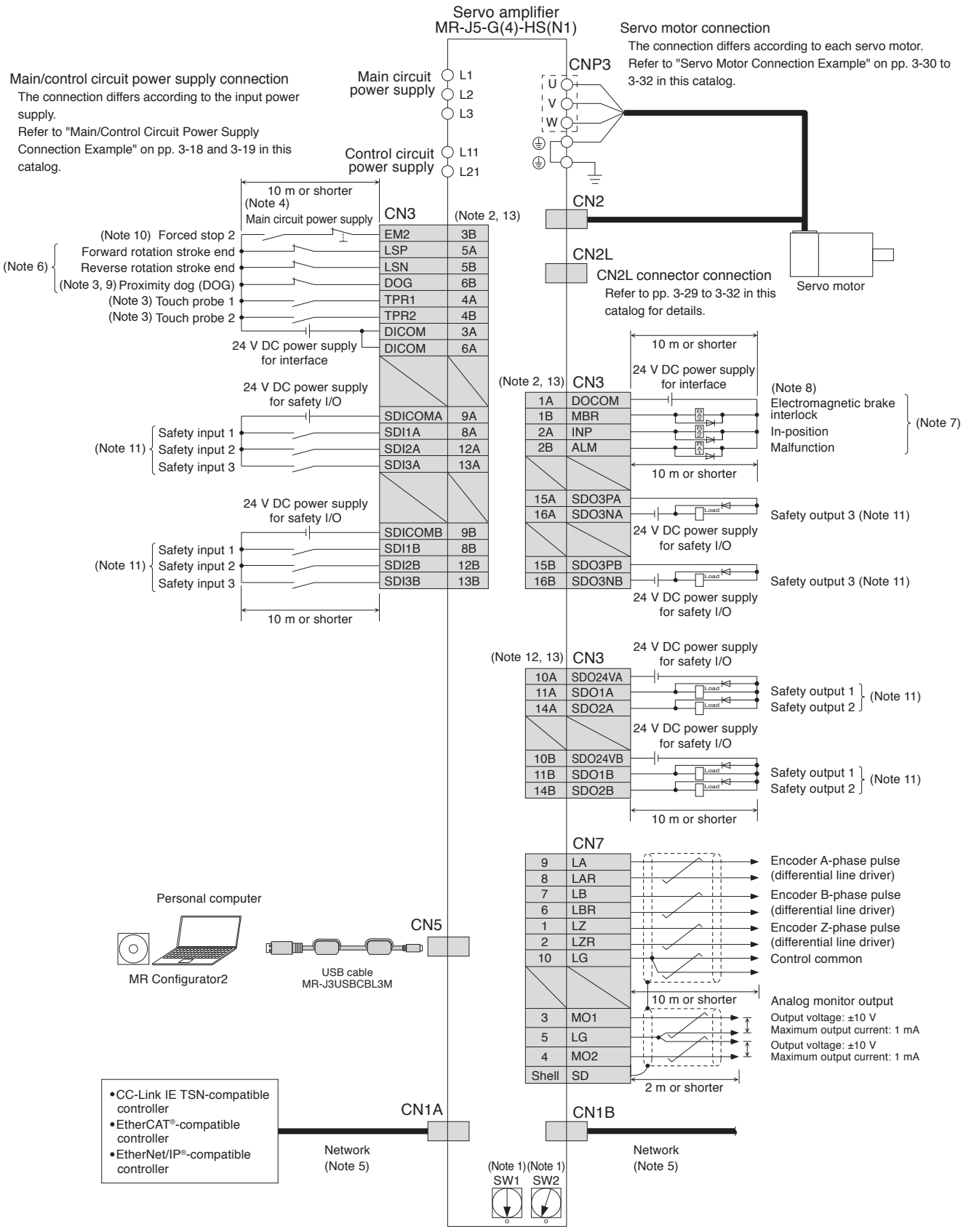

MR-J5-G(4)-HS(N1) Standard Wiring Diagram Example

G-HS

Notes:
1. The node address or the 4th octet of the IP address can be set to between 1 and 254 with a combination of the ID setting switches or the rotary switches (SW1 and SW2). Note that the number of the connectable device stations depends on the controller specifications.
2. This is for sink wiring. Source wiring is also possible.
3. For the restrictions on the communication cycle of the touch probe function, refer to "Restrictions" in this catalog.
4. To prevent an unexpected restart of the servo amplifier, create a circuit to turn off EM2 (Forced stop 2) when the main circuit power is turned off.
5. When branching off CC-Link IE TSN (synchronous communication function) with a switching hub, use a switching hub (class B) recommended by CC-Link Partner Association. When a switching hub (class A) is used, there are restrictions on the topologies to be used. Refer to the controller manual for details.
6. Devices for these pins can be changed with [Pr. PD03], [Pr. PD04], and [Pr. PD05].
7. Devices for these pins can be changed with [Pr. PD07], [Pr. PD08], and [Pr. PD09].
8. When using a linear servo motor or direct drive motor, use MBR (Electromagnetic brake interlock) for an external brake mechanism.
9. This device can be changed to TPR3 (Touch probe 3) with [Pr. PD05]. When TPR3 is set, connect by using a normally open contact switch as the same as TPR1 (Touch probe 1) and TPR2 (Touch probe 2).
10. The forced stop signal is issued for the servo amplifier. For overall system, apply the emergency stop on the controller side.
11. The functional safety cannot be used with the initial setting. When using the functional safety, follow the instructions in "MR-J5 User's Manual" and set the functional safety parameters.
12. SDO1A, SDO2A, SDO1B, and SDO2B can be used only for source wiring.
13. The frame of the CN3 connector is not connected to the protective earth (PE) terminal. Using a cable clamp fitting (AERSBAN-_SET) or shield connection clamp (SCC 15-F) for grounding is recommended as necessary. For details of AERSBAN-_SET and SCC 15-F, refer to "MR-J5 User's Manual".

Be sure to read through User's Manual for the actual wiring and use. Use the equipment after you have a full knowledge of the equipment, safety information and instructions.

Functional Safety I/O Signal Connector (CN8) Connection Example

G | G-RJ | WG | DG | B | B-RJ | WB | A | A-RJ

The following are connection examples of STO function for MR-J5-G. Be sure to read through "MR-J5 User's Manual" or "MR-J5D User's Manual" for the actual wiring and use.

●When using a safety door

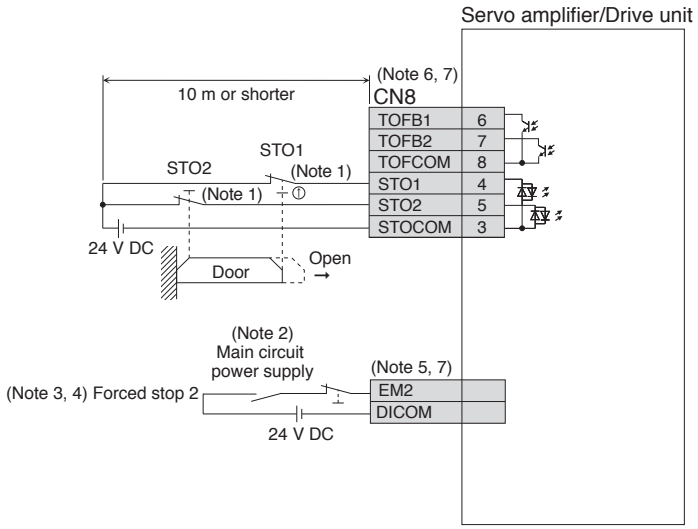

●When used with MR-J3-D05

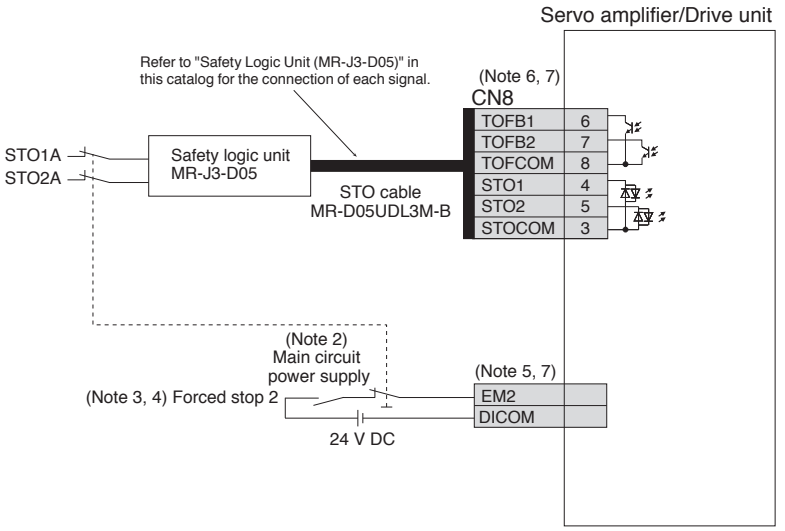

Notes:
1. When using the STO function, turn off STO1 and STO2 at the same time. Turn off STO1 and STO2 after the servo motor stops in servo-off state or after the servo motor stops with deceleration by turning off EM2 (Forced stop 2).
2. To prevent an unexpected restart of the servo amplifier, create a circuit to turn off EM2 (Forced stop 2) when the main circuit power is turned off.
3. If the controller does not have a forced stop function, install a forced stop 2 switch (normally closed contact).
4. Turn on EM2 (Forced stop 2) before starting the operation.
5. The connector and the pin numbers for each signal vary depending on the servo amplifier. Refer to the standard wiring diagram example for the relevant servo amplifier in this catalog for details.
6. For MR-J5-G(4)-RJ(N1), MR-J5W_-G(-N1), and MR-J5D_-G4(-N1), the input/output signal names of CN8 are different from the indicated names such as STO1 and TOFB1. Refer to "MR-J5 User's Manual" or "MR-J5D User's Manual" for details.
7. This is for source wiring. Sink wiring is also possible.

Be sure to read through User's Manual for the actual wiring and use. Use the equipment after you have a full knowledge of the equipment, safety information and instructions.

Main/Control Circuit Power Supply Connection Example (Note 6)

G | G-RJ | B | B-RJ | A | A-RJ

●Driving on/off of main circuit power supply with AC power supply for 3-phase 200 V AC

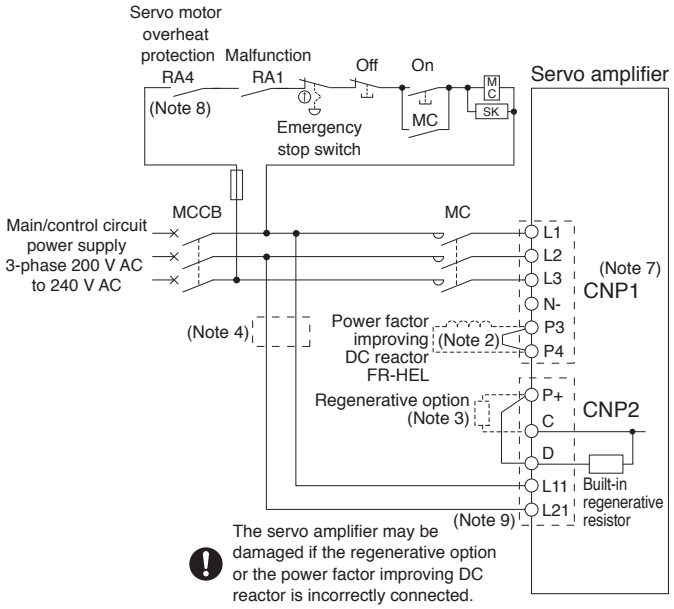

●Driving on/off of main circuit power supply with DC power supply for 3-phase 200 V AC

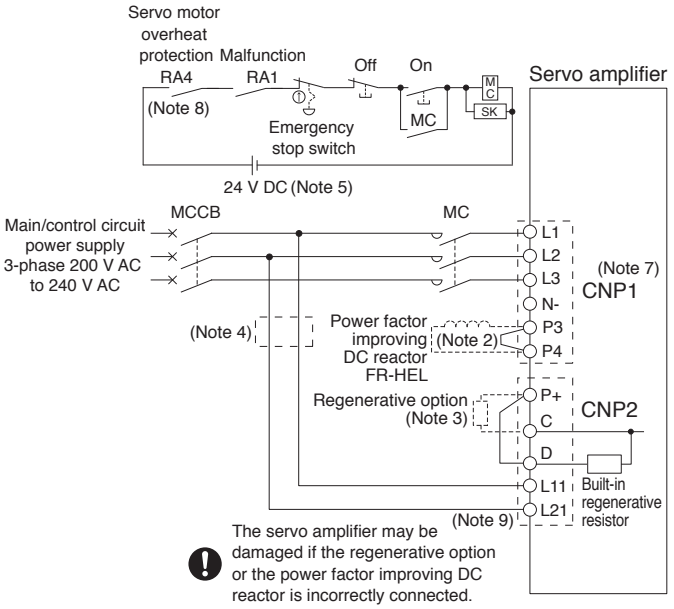

●Driving on/off of main circuit power supply with AC power supply for 1-phase 200 V AC

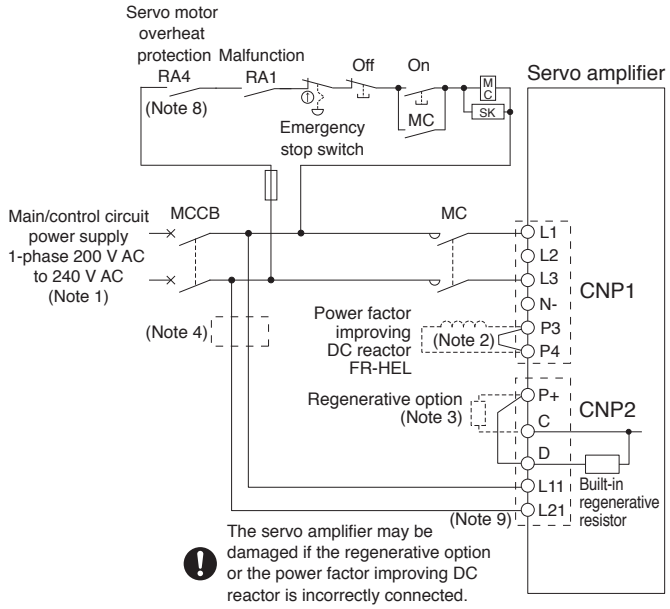

●Driving on/off of main circuit power supply with DC power supply for 1-phase 200 V AC

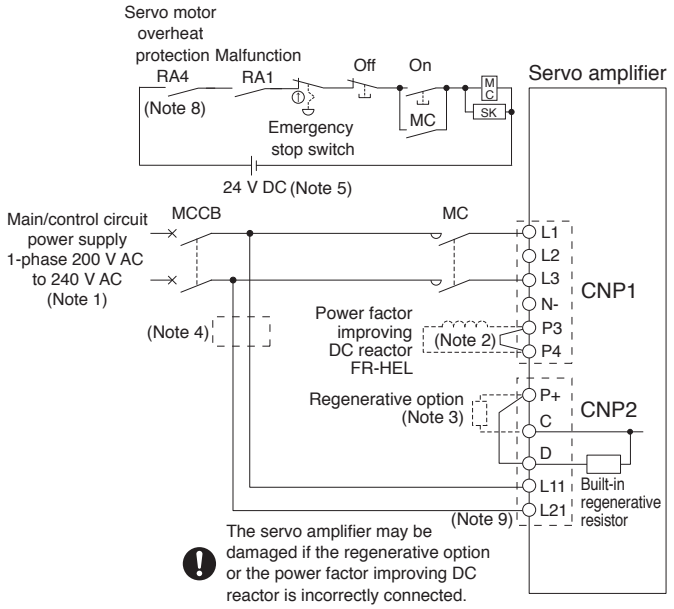

Notes:
1. For 1-phase 200 V AC to 240 V AC, connect the power supply to L1 and L3 terminals. Do not connect anything to L2.
2. Disconnect a short-circuit bar between P3 and P4 when using the power factor improving DC reactor or the simple converter unit.
3. Disconnect a short-circuit bar between P+ and D when connecting the regenerative option externally.
4. When wires used for L11 and L21 are thinner than those for L1, L2, and L3, use a molded-case circuit breaker. Refer to "MR-J5 User's Manual" for details.
5. Do not use the 24 V DC interface power supply for the magnetic contactor. Provide a dedicated power supply to the magnetic contactor.
6. For a connection example of power supply circuit with DC input, refer to "MR-J5 User's Manual".
7. For MR-J5-500_ and MR-J5-700_ servo amplifiers, CNP1 connector is divided into two connectors, CNP1A (L1/L2/L3) and CNP1B (N1/P3/P4).
8. When connecting a linear servo motor with a thermal protector, add a contact to shut off by being interlocked with the thermal protector output of the linear servo motor.
9. Do not ground the servo amplifier between L11 and L21 even when the control circuit power supply is separated from the main circuit power supply using an uninterruptible power supply (UPS) or an isolation transformer.

Be sure to read through User's Manual for the actual wiring and use. Use the equipment after you have a full knowledge of the equipment, safety information and instructions.

Main/Control Circuit Power Supply Connection Example G G-HS G-RJ B B-RJ A A-RJ

● Driving on/off of main circuit power supply with AC power supply for 3-phase 400 V AC and 3.5 kW or smaller

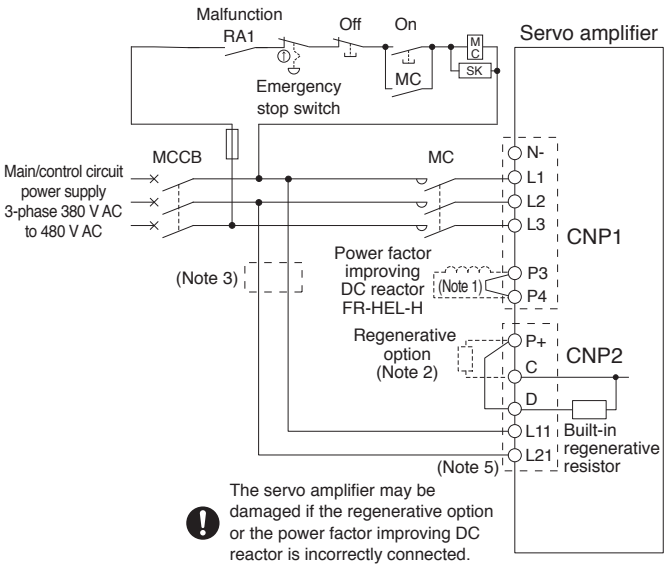

● Driving on/off of main circuit power supply with DC power supply for 3-phase 400 V AC and 3.5 kW or smaller

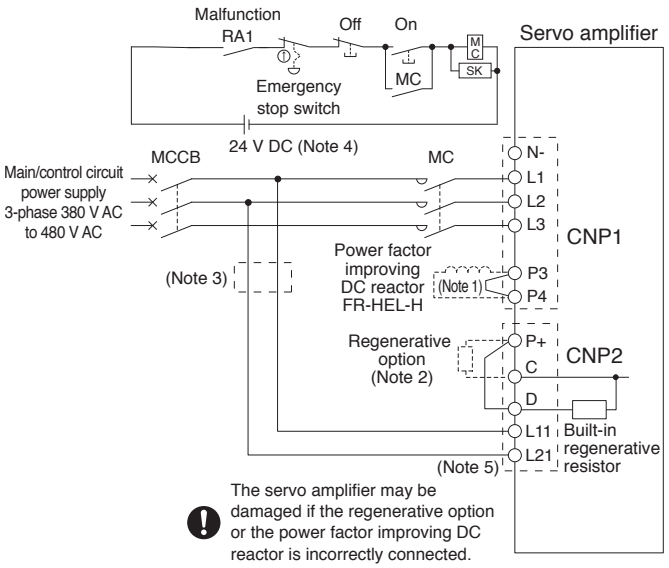

● Driving on/off of main circuit power supply with AC power supply for 3-phase 400 V AC and 5 kW or larger

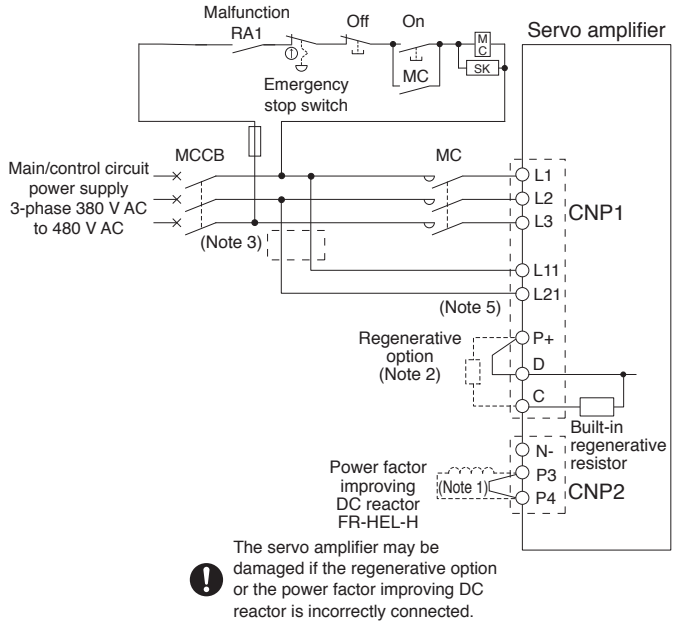

● Driving on/off of main circuit power supply with DC power supply for 3-phase 400 V AC and 5 kW or larger

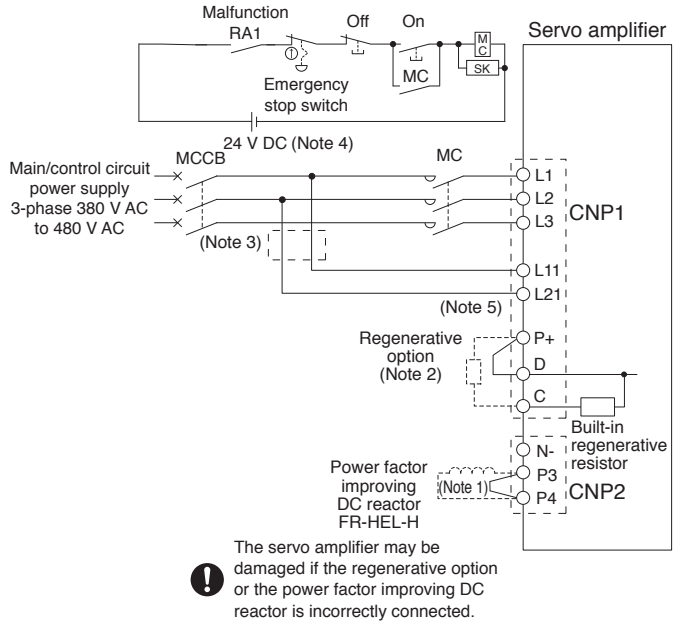

Notes: 1. Disconnect a short-circuit bar between P3 and P4 when using the power factor improving DC reactor.
2. Disconnect a short-circuit bar between P+ and D when connecting the regenerative option externally.
3. When wires used for L11 and L21 are thinner than those for L1, L2, and L3, use a molded-case circuit breaker. Refer to "MR-J5 User's Manual" for details.
4. Do not use the 24 V DC interface power supply for the magnetic contactor. Provide a dedicated power supply to the magnetic contactor.
5. Do not ground the servo amplifier between L11 and L21 even when the control circuit power supply is separated from the main circuit power supply using an uninterruptible power supply (UPS) or an isolation transformer.

Be sure to read through User's Manual for the actual wiring and use. Use the equipment after you have a full knowledge of the equipment, safety information and instructions.

Main/Control Circuit Power Supply Connection Example

G | G-HS | B | B-RJ | A | A-RJ

● Driving on/off of main circuit power supply with AC power supply for 3-phase 200 V AC/400 V AC, 12 kW to 25 kW

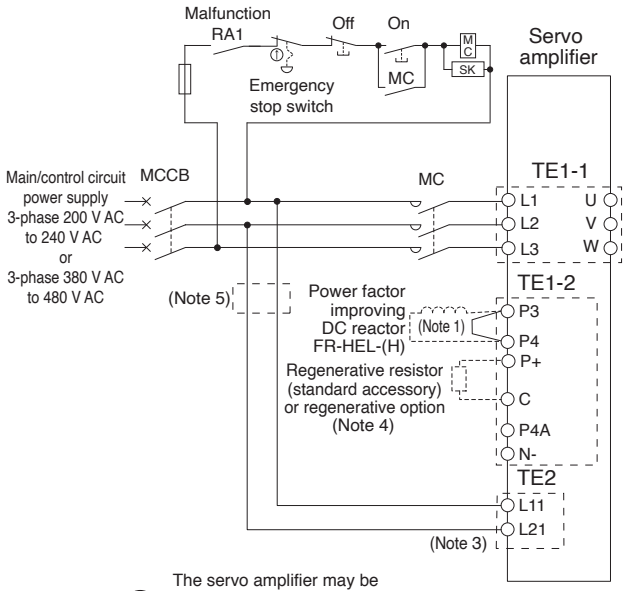

The servo amplifier may be damaged if the regenerative option or the power factor improving DC reactor is incorrectly connected.

● Driving on/off of main circuit power supply with DC power supply for 3-phase 200 V AC/400 V AC, 12 kW to 25 kW

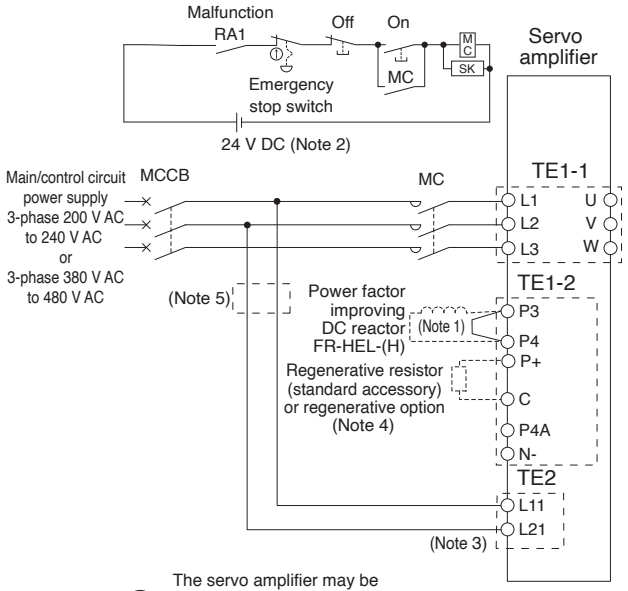

The servo amplifier may be damaged if the regenerative option or the power factor improving DC reactor is incorrectly connected.

Notes: 1. Disconnect a short-circuit bar between P3 and P4 when using the power factor improving DC reactor.
2. Do not use the 24 V DC interface power supply for the magnetic contactor. Provide a dedicated power supply to the magnetic contactor.
3. Do not ground the servo amplifier between L11 and L21 even when the control circuit power supply is separated from the main circuit power supply using an uninterruptible power supply (UPS) or an isolation transformer.
4. MR-J5-12KG_/MR-J5-12KB_/MR-J5-12KA_ or larger servo amplifiers do not have a built-in regenerative resistor.
5. When wires used for L11 and L21 are thinner than those for L1, L2, and L3, use a molded-case circuit breaker. Refer to "MR-J5 User's Manual" for details.

Be sure to read through User's Manual for the actual wiring and use. Use the equipment after you have a full knowledge of the equipment, safety information and instructions.

Servo Motor Connection Example (Rotary Servo Motor)

G B A

Semi Closed Loop Control System with MR-J5-G(4)(-N1)/MR-J5-B(4)/MR-J5-A(4)

●For HK-KT series/HK-MT series/HK-RT (1.0 kW to 2.0 kW) series

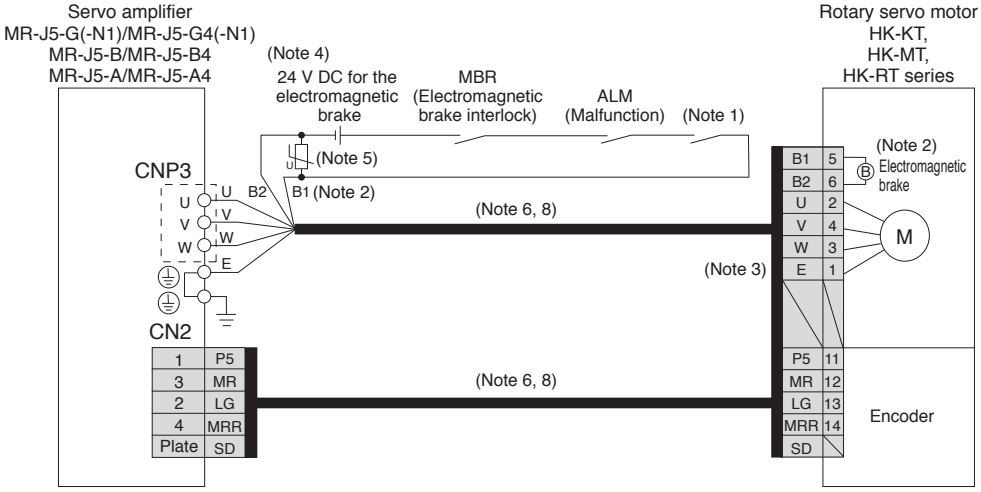

●For HK-ST series/HK-RT (3.5 kW to 7.0 kW) series

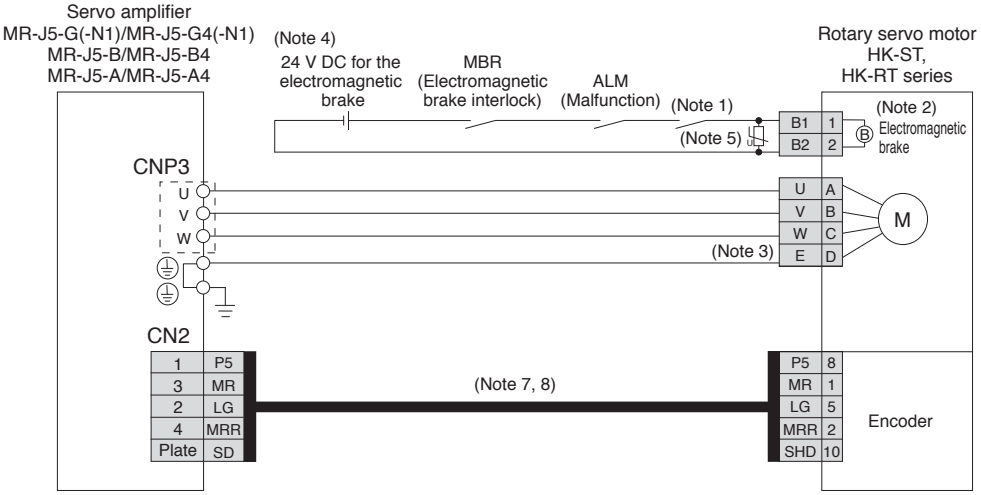

Notes: 1. Create the circuit in order to shut off by being interlocked with the emergency stop switch.
2. This is for the servo motors with an electromagnetic brake. The electromagnetic brake terminals do not have polarity.
3. Connect the grounding wire to the cabinet protective earth (PE) terminal via the servo amplifier for grounding the servo motor.
4. Do not use the 24 V DC interface power supply for the electromagnetic brake. Provide a dedicated power supply to the electromagnetic brake.
5. Install a surge absorber between B1 and B2.
6. This is for using an option dual cable type. Single cable types are also available.
7. Encoder cables are available as an option.
8. Refer to "Rotary Servo Motor User's Manual (For MR-J5)" when fabricating the cables.

Be sure to read through User's Manual for the actual wiring and use. Use the equipment after you have a full knowledge of the equipment, safety information and instructions.

Servo Motor Connection Example (Rotary Servo Motor)

G B A

Semi Closed Loop Control System with MR-J5-G(4)(-N1)/MR-J5-B(4)/MR-J5-A(4)

●For HK-JT 1500 r/min (7 kW to 15 kW) series

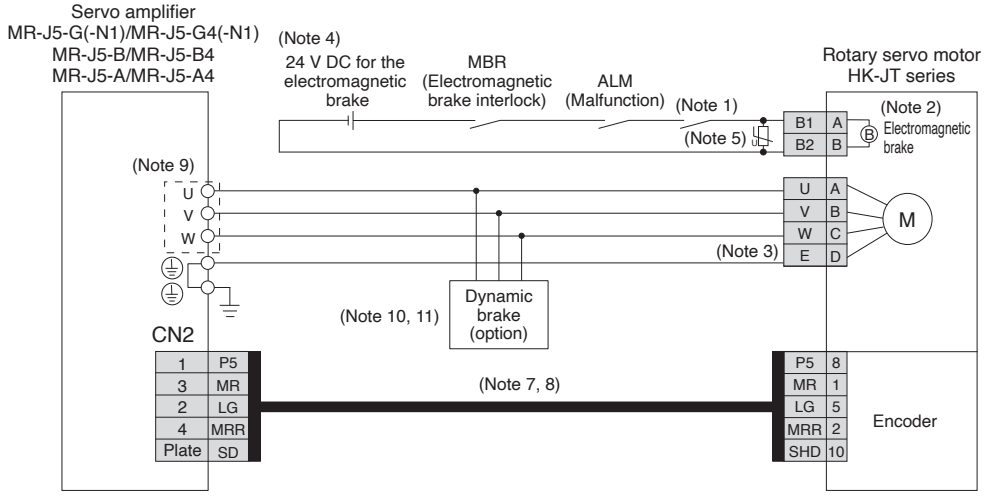

●For HK-JT 1000 r/min (15 kW) series/HK-JT 1500 r/min (22 kW) series

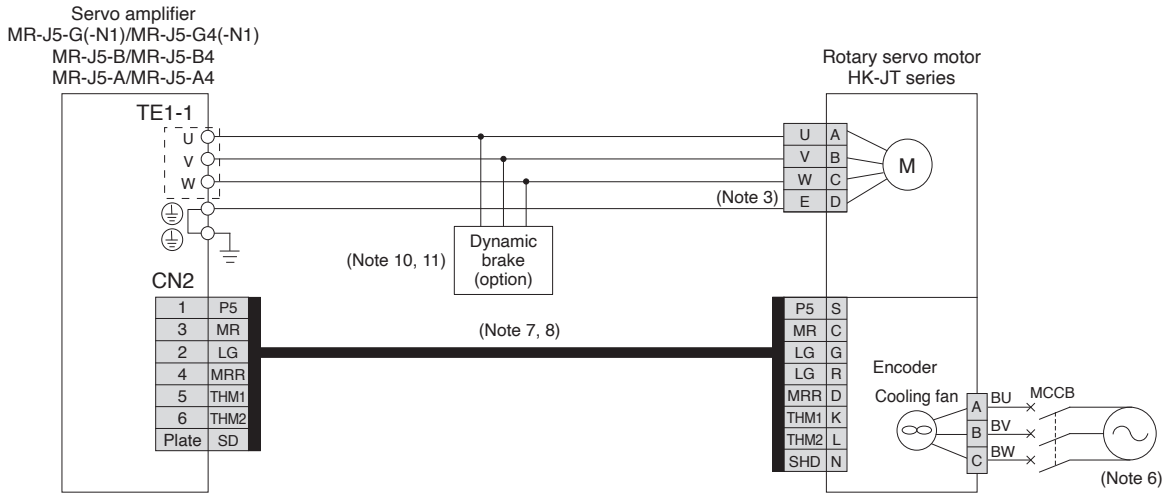

Notes:
1. Create the circuit in order to shut off by being interlocked with the emergency stop switch.
2. This is for the servo motors with an electromagnetic brake. The electromagnetic brake terminals do not have polarity.
3. Connect the grounding wire to the cabinet protective earth (PE) terminal via the servo amplifier for grounding the servo motor.
4. Do not use the 24 V DC interface power supply for the electromagnetic brake. Provide a dedicated power supply to the electromagnetic brake.
5. Install a surge absorber between B1 and B2.
6. Supply power to the cooling fan terminals. Refer to the cooling fan power supply described in the servo motor specifications in this catalog for the required power.
7. Encoder cables are available as an option.
8. Refer to "Rotary Servo Motor User's Manual (For MR-J5)" when fabricating the cables.
9. Connector or terminal varies depending on the servo amplifier capacities. Refer to the dimensions for each servo amplifier in this catalog.
10. Use an external dynamic brake with the 12 kW or larger servo amplifiers. Failure to do so will cause an accident because the servo motor does not stop immediately but coasts at emergency stop. Ensure the safety in the entire equipment. Refer to "MR-J5 User's Manual" when wiring the dynamic brake.
11. The external dynamic brake cannot be used to comply with the SEMI-F47 standard. Do not assign DB (Dynamic brake interlock) to the output device. If DB (Dynamic brake interlock) is assigned, the servo amplifier switches to servo-off status when an instantaneous power failure occurs.

Be sure to read through User's Manual for the actual wiring and use. Use the equipment after you have a full knowledge of the equipment, safety information and instructions.

Servo Motor Connection Example (Rotary Servo Motor)

G B A

Fully Closed Loop Control System with MR-J5-G(4)(-N1)/MR-J5-B(4)/MR-J5-A(4)

●For HK-KT series/HK-MT series/HK-RT (1.0 kW to 2.0 kW) series

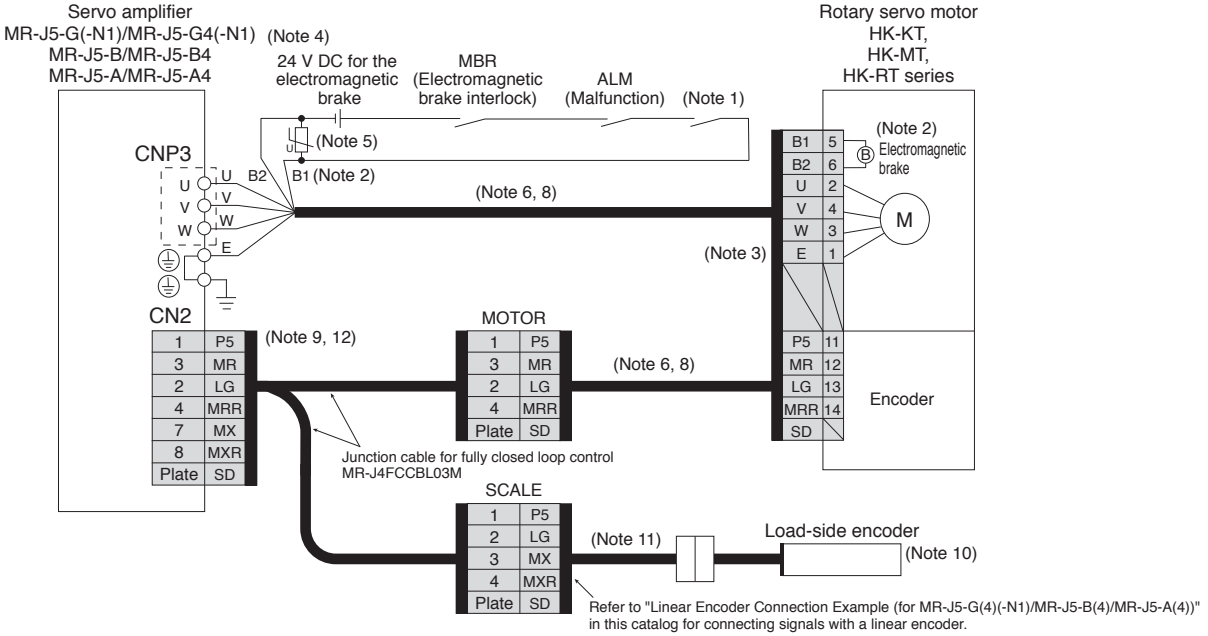

●For HK-ST series/HK-RT (3.5 kW to 7.0 kW) series

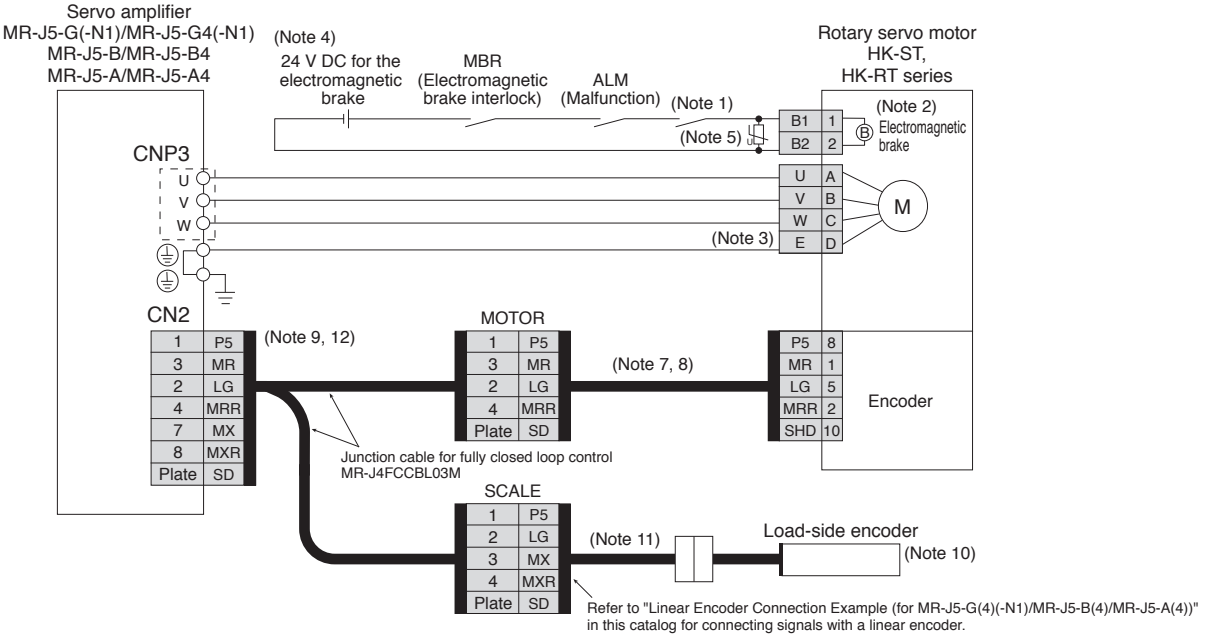

Notes:
1. Create the circuit in order to shut off by being interlocked with the emergency stop switch.
2. This is for the servo motors with an electromagnetic brake. The electromagnetic brake terminals do not have polarity.
3. Connect the grounding wire to the cabinet protective earth (PE) terminal via the servo amplifier for grounding the servo motor.
4. Do not use the 24 V DC interface power supply for the electromagnetic brake. Provide a dedicated power supply to the electromagnetic brake.
5. Install a surge absorber between B1 and B2.
6. This is for using an option dual cable type. Single cable types are also available.
7. Encoder cables are available as an option.
8. Refer to "Rotary Servo Motor User's Manual (For MR-J5)" when fabricating the cables.
9. For fully closed loop control, the load-side encoder and the servo motor encoder are compatible only with two-wire type communication method. Four-wire type cannot be used.
10. For linear encoders, refer to "List of Linear Encoders" in this catalog. Refer to "MR-J5 User's Manual" for the fully closed loop control with a rotary encoder.
11. Necessary encoder cables vary depending on the load-side encoder. Refer to "MR-J5 User's Manual" and "Rotary Servo Motor User's Manual (For MR-J5)".
12. When configuring a fully closed loop control system with MR-J5-G(4)(-N1)/MR-J5-B(4)/MR-J5-A(4), connect MR-J4FCCBL03M junction cable or a junction cable fabricated using MR-J3THMCN2 connector set to CN2 connector.

Be sure to read through User's Manual for the actual wiring and use. Use the equipment after you have a full knowledge of the equipment, safety information and instructions.

Servo Motor Connection Example (Rotary Servo Motor)

G B A

Fully Closed Loop Control System with MR-J5-G(4)(-N1)/MR-J5-B(4)/MR-J5-A(4)

●For HK-JT 1500 r/min (7 kW to 15 kW) series

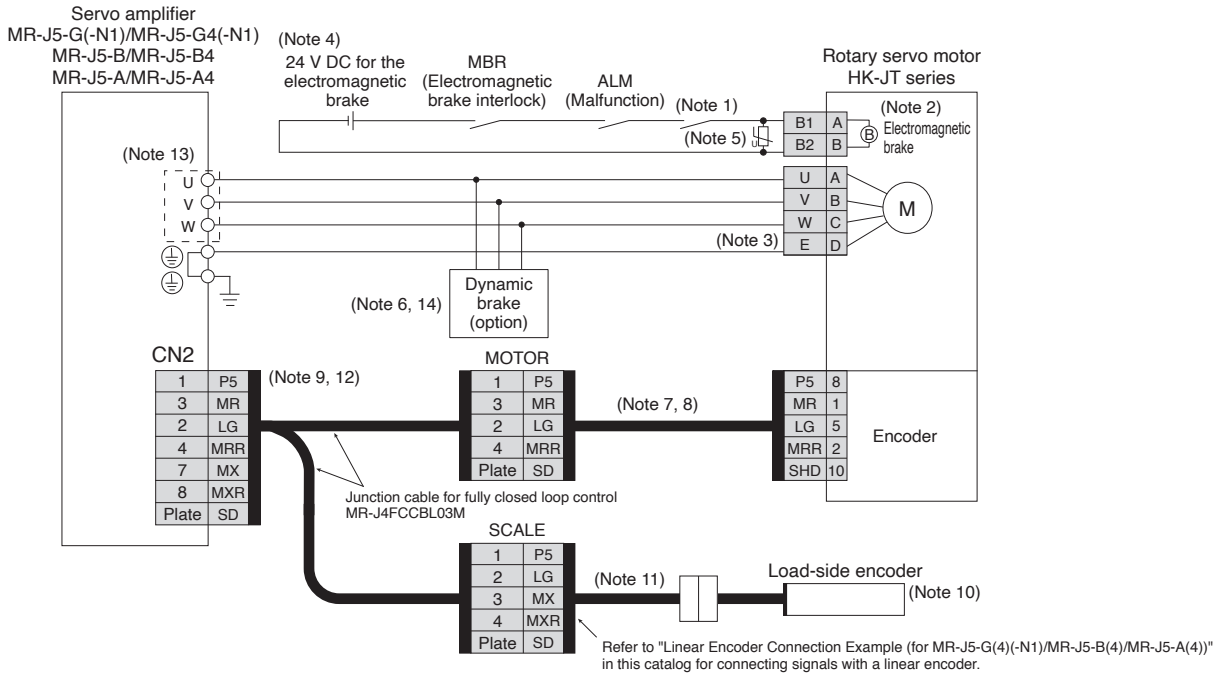

Notes:
1. Create the circuit in order to shut off by being interlocked with the emergency stop switch.
2. This is for the servo motors with an electromagnetic brake. The electromagnetic brake terminals do not have polarity.
3. Connect the grounding wire to the cabinet protective earth (PE) terminal via the servo amplifier for grounding the servo motor.
4. Do not use the 24 V DC interface power supply for the electromagnetic brake. Provide a dedicated power supply to the electromagnetic brake.
5. Install a surge absorber between B1 and B2.
6. Use an external dynamic brake with the 12 kW or larger servo amplifiers. Failure to do so will cause an accident because the servo motor does not stop immediately but coasts at emergency stop. Ensure the safety in the entire equipment. Refer to "MR-J5 User's Manual" when wiring the dynamic brake.
7. Encoder cables are available as an option.
8. Refer to "Rotary Servo Motor User's Manual (For MR-J5)" when fabricating the cables.
9. For fully closed loop control, the load-side encoder and the servo motor encoder are compatible only with two-wire type communication method. Four-wire type cannot be used.
10. For linear encoders, refer to "List of Linear Encoders" in this catalog. Refer to "MR-J5 User's Manual" for the fully closed loop control with a rotary encoder.
11. Necessary encoder cables vary depending on the load-side encoder. Refer to "MR-J5 User's Manual" and "Rotary Servo Motor User's Manual (For MR-J5)".
12. When configuring a fully closed loop control system with MR-J5-G(4)(-N1)/MR-J5-B(4)/MR-J5-A(4), connect MR-J4FCCBL03M junction cable or a junction cable fabricated using MR-J3THMCN2 connector set to CN2 connector.
13. Connector or terminal varies depending on the servo amplifier capacities. Refer to the dimensions for each servo amplifier in this catalog.
14. The external dynamic brake cannot be used to comply with the SEMI-F47 standard. Do not assign DB (Dynamic brake interlock) to the output device. If DB (Dynamic brake interlock) is assigned, the servo amplifier switches to servo-off status when an instantaneous power failure occurs.

Be sure to read through User's Manual for the actual wiring and use. Use the equipment after you have a full knowledge of the equipment, safety information and instructions.

Servo Motor Connection Example (Rotary Servo Motor)

G B A

Fully Closed Loop Control System with MR-J5-G(4)(-N1)/MR-J5-B(4)/MR-J5-A(4)

●For HK-JT 1000 r/min (15 kW) series/HK-JT 1500 r/min (22 kW) series

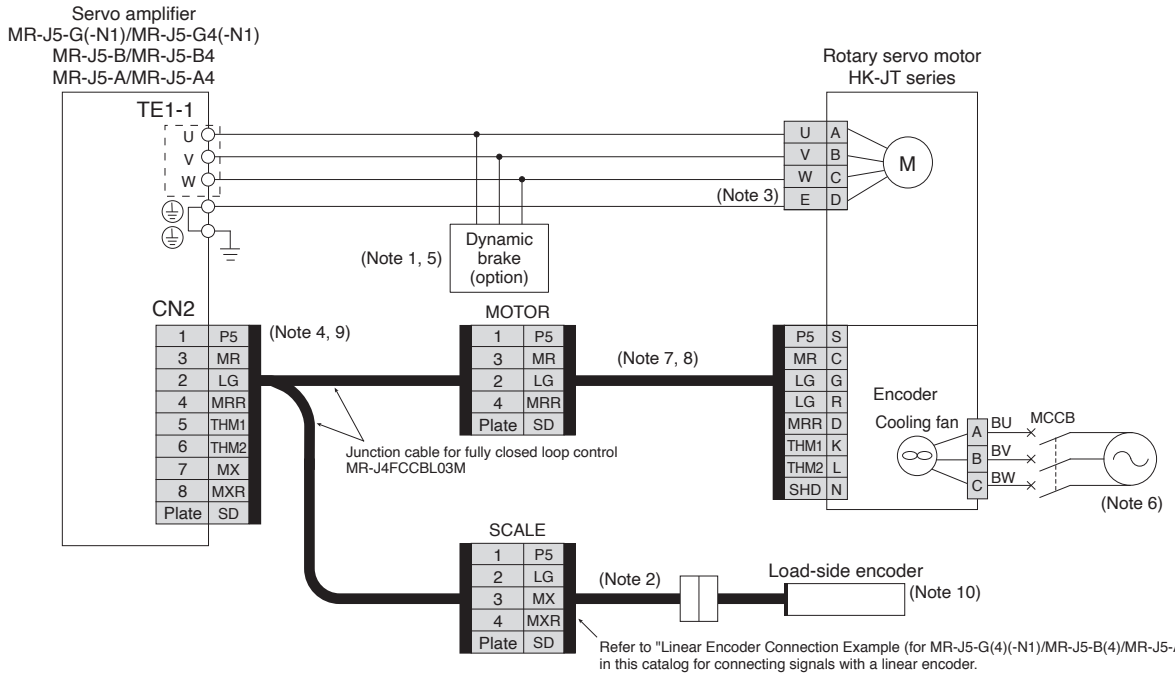

Notes:
1. The external dynamic brake cannot be used to comply with the SEMI-F47 standard. Do not assign DB (Dynamic brake interlock) to the output device. If DB (Dynamic brake interlock) is assigned, the servo amplifier switches to servo-off status when an instantaneous power failure occurs.
2. Necessary encoder cables vary depending on the load-side encoder. Refer to "MR-J5 User's Manual" and "Rotary Servo Motor User's Manual (For MR-J5)".
3. Connect the grounding wire to the cabinet protective earth (PE) terminal via the servo amplifier for grounding the servo motor.
4. When configuring a fully closed loop control system with MR-J5-G(4)(-N1)/MR-J5-B(4)/MR-J5-A(4), connect MR-J4FCCBL03M junction cable or a junction cable fabricated using MR-J3THMCN2 connector set to CN2 connector.
5. Use an external dynamic brake with the 12 kW or larger servo amplifiers. Failure to do so will cause an accident because the servo motor does not stop immediately but coasts at emergency stop. Ensure the safety in the entire equipment. Refer to "MR-J5 User's Manual" when wiring the dynamic brake.
6. Supply power to the cooling fan terminals. Refer to the cooling fan power supply described in the servo motor specifications in this catalog for the required power.
7. Encoder cables are available as an option.
8. Refer to "Rotary Servo Motor User's Manual (For MR-J5)" when fabricating the cables.
9. For fully closed loop control, the load-side encoder and the servo motor encoder are compatible only with two-wire type communication method. Four-wire type cannot be used.
10. For linear encoders, refer to "List of Linear Encoders" in this catalog. Refer to "MR-J5 User's Manual" for the fully closed loop control with a rotary encoder.

Be sure to read through User's Manual for the actual wiring and use. Use the equipment after you have a full knowledge of the equipment, safety information and instructions.

Servo Motor Connection Example (Linear Servo Motor)

G B A

Linear Servo System with MR-J5-G(-N1)/MR-J5-B/MR-J5-A

●For LM-H3 series/LM-F series/LM-K2 series/LM-U2 series

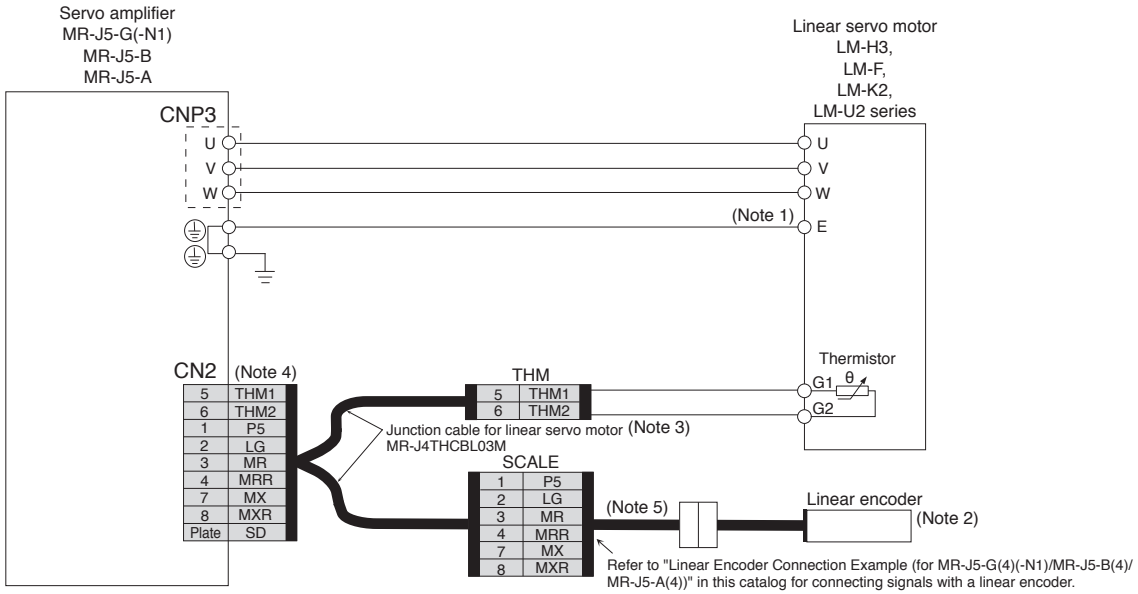

Notes: 1. Connect the grounding wire to the cabinet protective earth (PE) terminal via the servo amplifier for grounding the servo motor.
2. For linear encoders, refer to "List of Linear Encoders" in this catalog.
3. MR-J4THCBL03M junction cable for linear servo motor is compatible with both two-wire and four-wire type linear encoders.
4. When using a linear servo motor with MR-J5-G(-N1)/MR-J5-B/MR-J5-A, connect MR-J4THCBL03M junction cable or a junction cable fabricated using MR-J3THMCN2 connector set to CN2 connector.
5. Necessary cables vary depending on the linear encoder. Refer to "MR-J5 Partner's Encoder User's Manual" for details.

Be sure to read through User's Manual for the actual wiring and use. Use the equipment after you have a full knowledge of the equipment, safety information and instructions.

Servo Motor Connection Example (Linear Servo Motor)

G A

Linear Servo System with MR-J5-G(-N1)/MR-J5-A

●For LM-AJ series

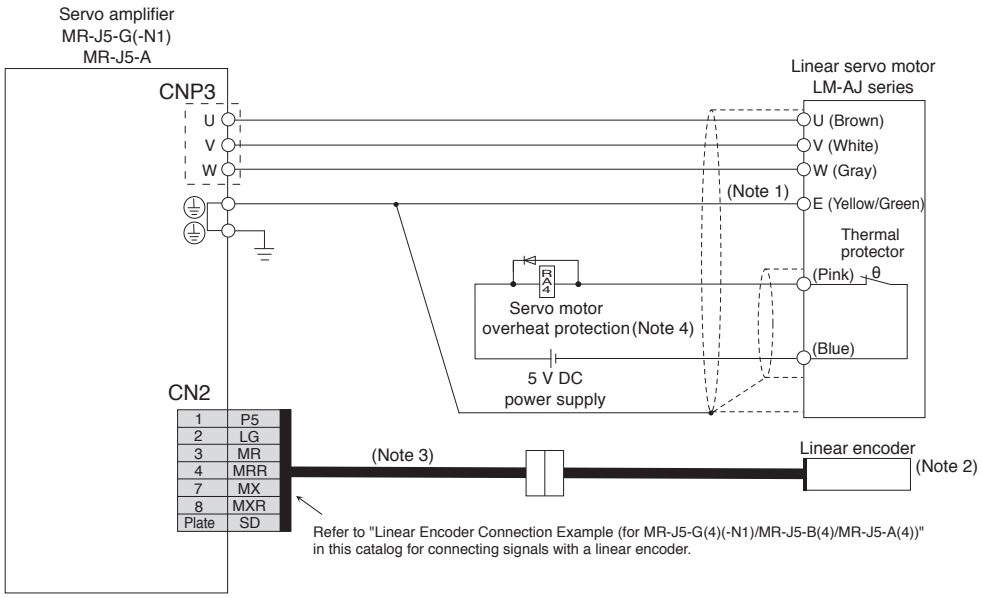

●For LM-AU series

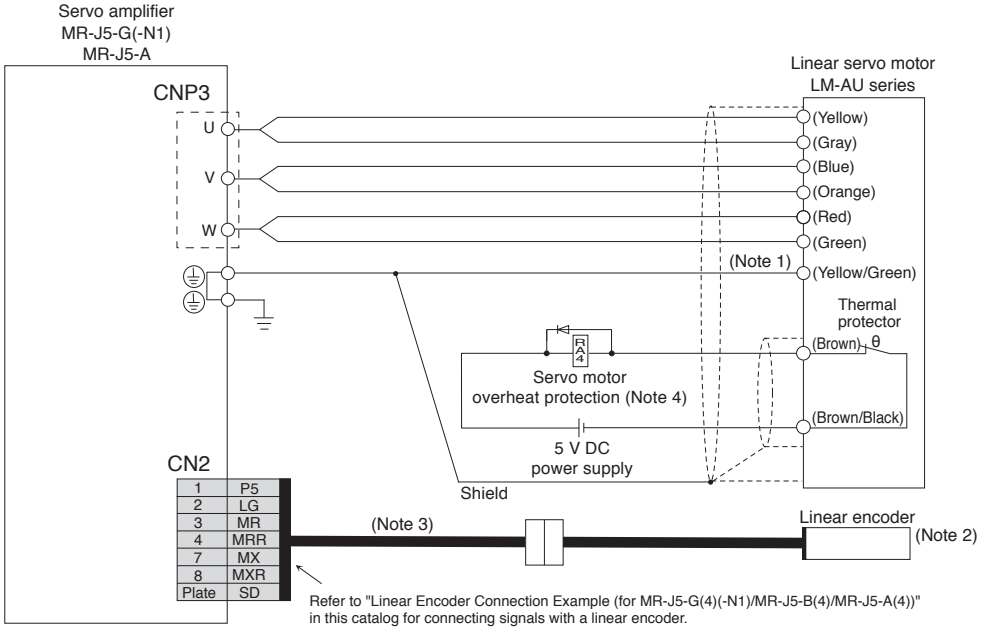

Notes: 1. Connect the grounding wire to the cabinet protective earth (PE) terminal via the servo amplifier for grounding the servo motor.
2. For linear encoders, refer to "List of Linear Encoders" in this catalog.
3. Necessary cables vary depending on the linear encoder. Refer to "MR-J5 Partner's Encoder User's Manual" for details.
4. Create a relay circuit to turn off the main circuit power supply when the thermal protector is opened by overheating. Use a relay designed for a flowing current of 1000 mA or less. If a mechanical relay is used, use a relay designed for a flowing current of 50 mA to 1000 mA.

Be sure to read through User's Manual for the actual wiring and use. Use the equipment after you have a full knowledge of the equipment, safety information and instructions.

Linear Encoder Connection Example (for MR-J5-G(4)(-N1)/MR-J5-B(4)/MR-J5-A(4)) G B A

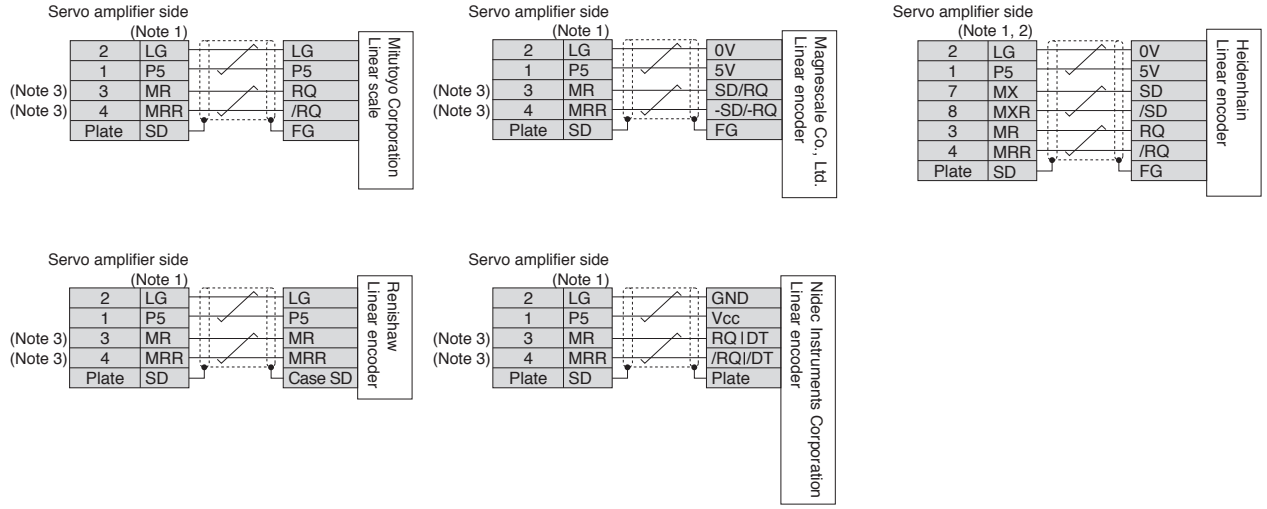

Notes: 1. For the number of the wire pairs for LG and P5, refer to "MR-J5 Partner's Encoder User's Manual".
2. When the fully closed loop control system is configured with a rotary servo motor, the load-side encoder and the servo motor encoder are compatible only with two-wire type communication method. Four-wire type cannot be used.
3. For the fully closed loop control, MR and MRR of the servo amplifier-side connectors will be connected to MX and MXR of the SCALE connectors of MR-J4FCCBL03M.

Be sure to read through User's Manual for the actual wiring and use. Use the equipment after you have a full knowledge of the equipment, safety information and instructions.

Servo Motor Connection Example (Direct Drive Motor)

G | G-RJ | B | B-RJ | A | A-RJ

●For TM-RG2M series/TM-RU2M series/TM-RFM series (incremental system)

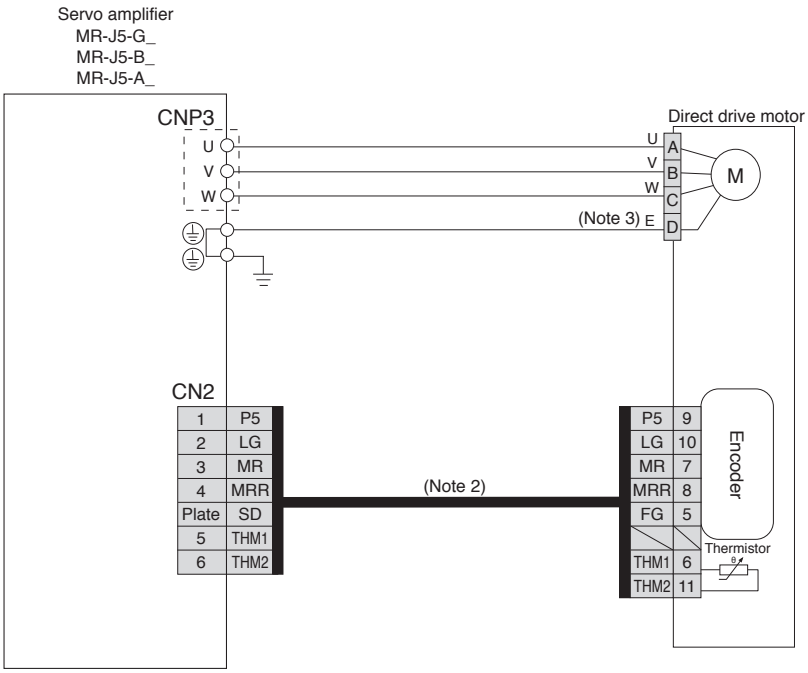

●For TM-RG2M series/TM-RU2M series/TM-RFM series (absolute position detection system)

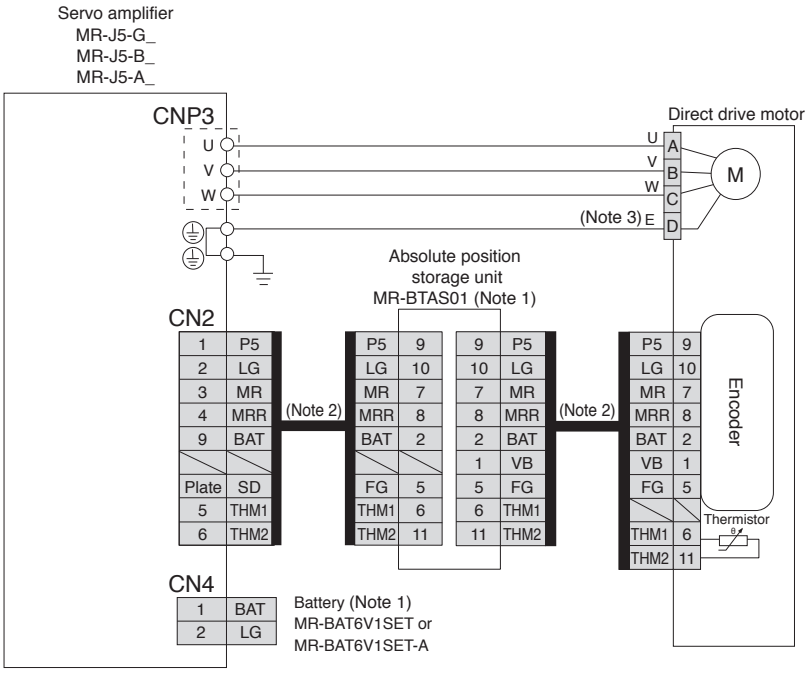

Notes: 1. An MR-BTAS01 absolute position storage unit, and MR-BAT6V1SET or MR-BAT6V1SET-A battery (sold as options) are required for absolute position detection system. Refer to "MR-J5 User's Manual" and "Direct Drive Motor User's Manual" for details of absolute position detection system.
2. Fabricate this encoder cable. Refer to "Direct Drive Motor User's Manual" when fabricating the encoder cable.
3. Connect the grounding wire to the cabinet protective earth (PE) terminal via the servo amplifier for grounding the servo motor.

Be sure to read through User's Manual for the actual wiring and use. Use the equipment after you have a full knowledge of the equipment, safety information and instructions.

External Encoder Connection Specifications (Note 9)

G | G-HS | G-RJ | B | B-RJ | A | A-RJ

Refer to the following table for the encoder communication method compatible with each system and for the servo amplifier connector to which a load-side encoder should be connected.

System configuration	External encoder communication method	Connector			
		MR-J5-G(4)(-N1)/ MR-J5-B(4)	MR-J5-G(4)-HS(N1)/ MR-J5-G(4)-RJ(N1)/ MR-J5-B(4)-RJ	MR-J5-A(4)	MR-J5-A(4)-RJ
Linear servo system (Note 3)	Two-wire type	CN2 (Note 1)	CN2 (Note 1)	CN2 (Note 1)	CN2 (Note 1)
	Four-wire type				
	A/B/Z-phase differential output method		CN2L (Note 2)		CN2L (Note 2)
Fully closed loop control system (Note 6, 7)	Two-wire type	CN2 (Note 4, 5)	CN2L	CN2 (Note 4, 5)	CN2L
	Four-wire type				
	A/B/Z-phase differential output method (Note 8)				
Scale measurement function (Note 6, 7)	Two-wire type	CN2 (Note 4, 5)	CN2L		
	Four-wire type				
	A/B/Z-phase differential output method (Note 8)				

Notes:
1. MR-J4THCBL03M junction cable is required.
2. Connect a thermistor to CN2 connector.
3. Refer to "Combinations of Linear Servo Motors and Servo Amplifiers" in this catalog for servo amplifiers that are compatible with linear servo motors.
4. MR-J4FCCBL03M junction cable is required.
5. MR-J5-G(4)(-N1)/MR-J5-B(4)/MR-J5-A(4) does not support a servo motor encoder with the four-wire type communication method. Use MR-J5-G(4)-HS(N1)/MR-J5-G(4)-RJ(N1)/MR-J5-B(4)-RJ/MR-J5-A(4)-RJ.
6. For the restrictions on the communication cycle, refer to "Restrictions" in this catalog.
7. For the servo amplifier firmware version supporting each function, refer to "MR-J5 User's Manual".
8. For the connection of the A/B/Z-phase differential output method using the fully closed loop control system or the scale measurement function, refer to "MR-J5 User's Manual" and "MR-J5 Partner's Encoder User's Manual".
9. For MR-J5-_B_-LL, an external encoder cannot be used.

Servo Motor Connection Example (Rotary Servo Motor)

G-HS G-RJ B-RJ A-RJ

Fully Closed Loop Control System with MR-J5-G4-HS(N1)/MR-J5-G(4)-RJ(N1)/MR-J5-B(4)-RJ/MR-J5-A(4)-RJ

●For HK-KT series/HK-MT series/HK-RT (1.0 kW to 2.0 kW) series

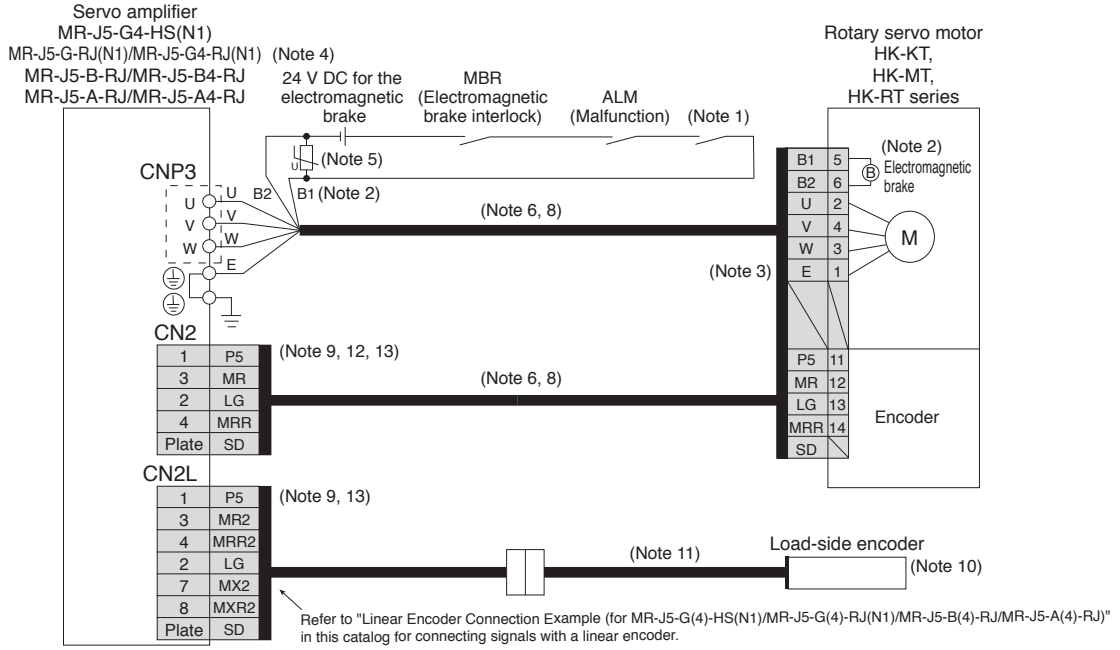

●For HK-ST series/HK-RT (3.5 kW to 7.0 kW) series

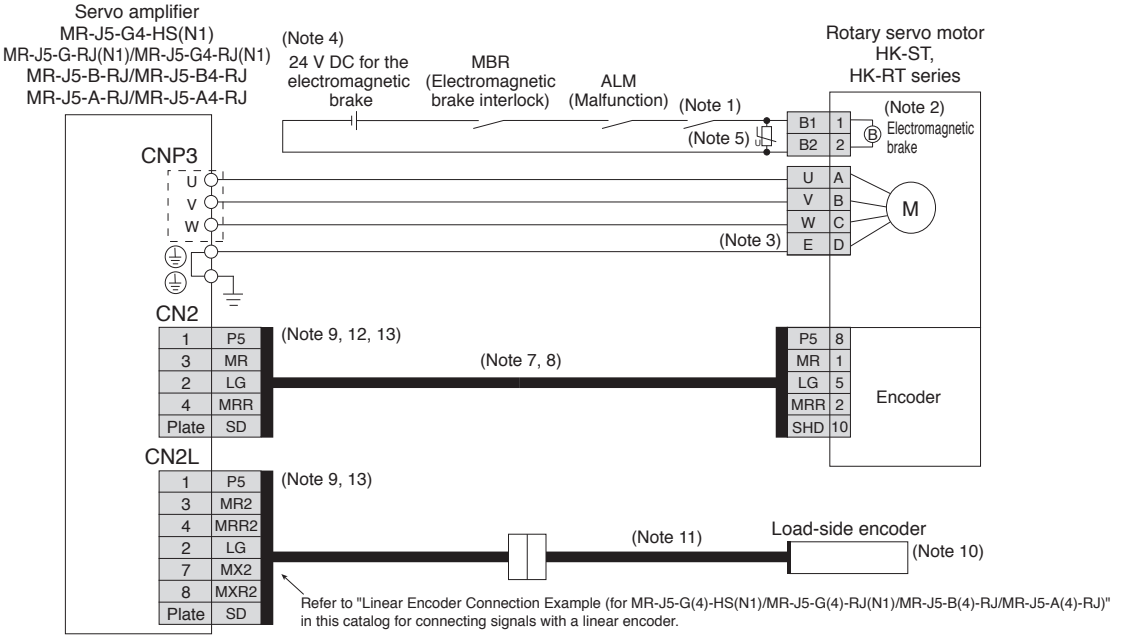

Notes:
1. Create the circuit in order to shut off by being interlocked with the emergency stop switch.
2. This is for the servo motors with an electromagnetic brake. The electromagnetic brake terminals do not have polarity.
3. Connect the grounding wire to the cabinet protective earth (PE) terminal via the servo amplifier for grounding the servo motor.
4. Do not use the 24 V DC interface power supply for the electromagnetic brake. Provide a dedicated power supply to the electromagnetic brake.
5. Install a surge absorber between B1 and B2.
6. This is for using an option dual cable type. Single cable types are also available.
7. Encoder cables are available as an option.
8. Refer to "Rotary Servo Motor User's Manual (For MR-J5)" when fabricating the cables.
9. The load-side encoder and the servo motor encoder are compatible with both two-wire and four-wire type communication methods.
10. For linear encoders, refer to "List of Linear Encoders" in this catalog. Refer to "MR-J5 User's Manual" for the fully closed loop control with a rotary encoder.
11. Necessary encoder cables vary depending on the load-side encoder. Refer to "MR-J5 User's Manual" and "Rotary Servo Motor User's Manual (For MR-J5)".
12. This wiring of the servo motor encoder is applicable for the two-wire type communication method.
13. When configuring a fully closed loop control system with MR-J5-G4-HS(N1)/MR-J5-G(4)-RJ(N1)/MR-J5-B(4)-RJ/MR-J5-A(4)-RJ, connect a servo motor encoder to CN2 connector and a load-side encoder to CN2L connector. Do not use MR-J4FCCBL03M junction cable or a junction cable fabricated using MR-J3THMCN2 connector set.

Be sure to read through User's Manual for the actual wiring and use. Use the equipment after you have a full knowledge of the equipment, safety information and instructions.

Servo Motor Connection Example (Rotary Servo Motor)

G-HS G-RJ B-RJ A-RJ

Fully Closed Loop Control System with MR-J5-G(4)-HS(N1)/MR-J5-G-RJ(N1)/MR-J5-B(4)-RJ/MR-J5-A(4)-RJ

●For HK-JT 1500 r/min (7 kW to 15 kW) series

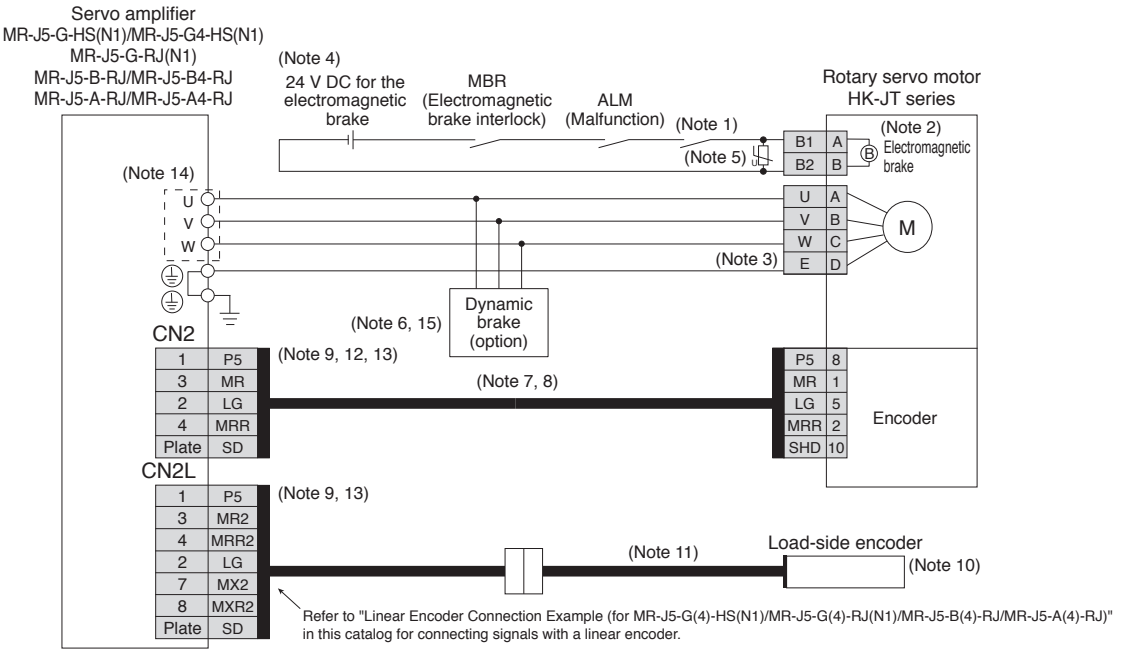

Notes:
1. Create the circuit in order to shut off by being interlocked with the emergency stop switch.
2. This is for the servo motors with an electromagnetic brake. The electromagnetic brake terminals do not have polarity.
3. Connect the grounding wire to the cabinet protective earth (PE) terminal via the servo amplifier for grounding the servo motor.
4. Do not use the 24 V DC interface power supply for the electromagnetic brake. Provide a dedicated power supply to the electromagnetic brake.
5. Install a surge absorber between B1 and B2.
6. Use an external dynamic brake with the 12 kW or larger servo amplifiers. Failure to do so will cause an accident because the servo motor does not stop immediately but coasts at emergency stop. Ensure the safety in the entire equipment. Refer to "MR-J5 User's Manual" when wiring the dynamic brake.
7. Encoder cables are available as an option.
8. Refer to "Rotary Servo Motor User's Manual (For MR-J5)" when fabricating the cables.
9. The load-side encoder and the servo motor encoder are compatible with both two-wire and four-wire type communication methods.
10. For linear encoders, refer to "List of Linear Encoders" in this catalog. Refer to "MR-J5 User's Manual" for the fully closed loop control with a rotary encoder.
11. Necessary encoder cables vary depending on the load-side encoder. Refer to "MR-J5 User's Manual" and "Rotary Servo Motor User's Manual (For MR-J5)".
12. This wiring of the servo motor encoder is applicable for the two-wire type communication method.
13. When configuring a fully closed loop control system with MR-J5-G(4)-HS(N1)/MR-J5-G-RJ(N1)/MR-J5-B(4)-RJ/MR-J5-A(4)-RJ, connect a servo motor encoder to CN2 connector and a load-side encoder to CN2L connector. Do not use MR-J4FCCBL03M junction cable or a junction cable fabricated using MR-J3THMCN2 connector set.
14. Connector or terminal varies depending on the servo amplifier capacities. Refer to the dimensions for each servo amplifier in this catalog.
15. The external dynamic brake cannot be used to comply with the SEMI-F47 standard. Do not assign DB (Dynamic brake interlock) to the output device. If DB (Dynamic brake interlock) is assigned, the servo amplifier switches to servo-off status when an instantaneous power failure occurs.

Be sure to read through User's Manual for the actual wiring and use. Use the equipment after you have a full knowledge of the equipment, safety information and instructions.

Servo Motor Connection Example (Rotary Servo Motor)

G-HS B-RJ A-RJ

Fully Closed Loop Control System with MR-J5-G(4)-HS(N1)/MR-J5-B(4)-RJ/MR-J5-A(4)-RJ

●For HK-JT 1000 r/min (15 kW) series/HK-JT 1500 r/min (22 kW) series

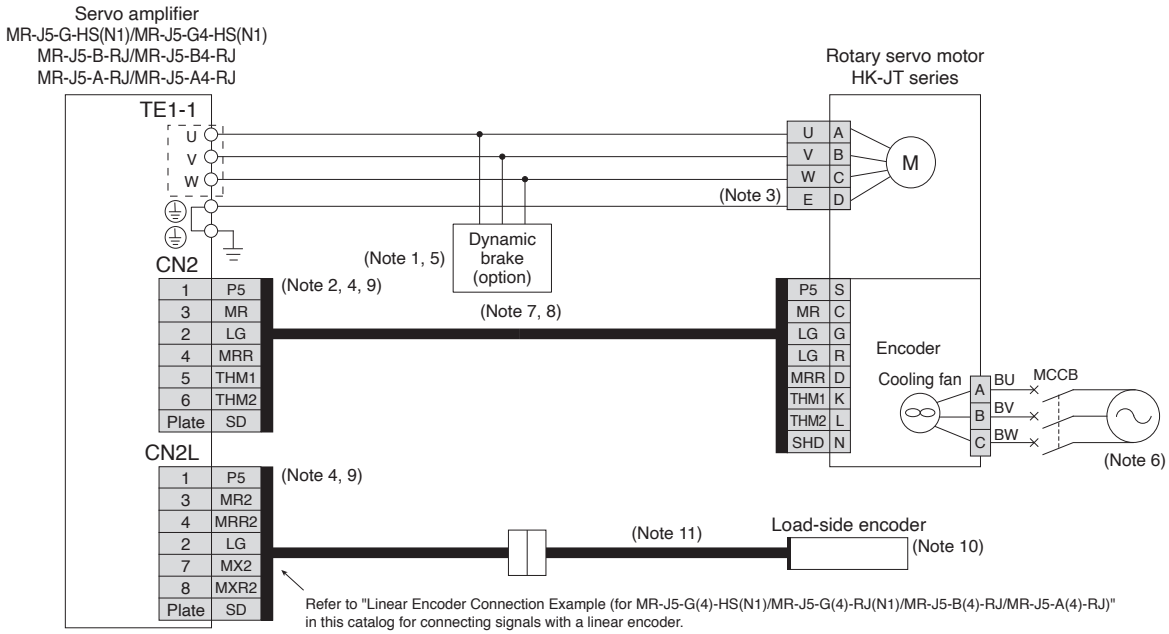

Notes:
1. The external dynamic brake cannot be used to comply with the SEMI-F47 standard. Do not assign DB (Dynamic brake interlock) to the output device. If DB (Dynamic brake interlock) is assigned, the servo amplifier switches to servo-off status when an instantaneous power failure occurs.
2. This wiring of the servo motor encoder is applicable for the two-wire type communication method.
3. Connect the grounding wire to the cabinet protective earth (PE) terminal via the servo amplifier for grounding the servo motor.
4. When configuring a fully closed loop control system with MR-J5-G(4)-HS(N1)/MR-J5-B(4)-RJ/MR-J5-A(4)-RJ, connect a servo motor encoder to CN2 connector and a load-side encoder to CN2L connector. Do not use MR-J4FCCBL03M junction cable or a junction cable fabricated using MR-J3THMCN2 connector set.
5. Use an external dynamic brake with the 12 kW or larger servo amplifiers. Failure to do so will cause an accident because the servo motor does not stop immediately but coasts at emergency stop. Ensure the safety in the entire equipment. Refer to "MR-J5 User's Manual" when wiring the dynamic brake.
6. Supply power to the cooling fan terminals. Refer to the cooling fan power supply described in the servo motor specifications in this catalog for the required power.
7. Encoder cables are available as an option.
8. Refer to "Rotary Servo Motor User's Manual (For MR-J5)" when fabricating the cables.
9. The load-side encoder and the servo motor encoder are compatible with both two-wire and four-wire type communication methods.
10. For linear encoders, refer to "List of Linear Encoders" in this catalog. Refer to "MR-J5 User's Manual" for the fully closed loop control with a rotary encoder.
11. Necessary encoder cables vary depending on the load-side encoder. Refer to "MR-J5 User's Manual" and "Rotary Servo Motor User's Manual (For MR-J5)".

Be sure to read through User's Manual for the actual wiring and use. Use the equipment after you have a full knowledge of the equipment, safety information and instructions.

Servo Motor Connection Example

G-RJ B-RJ A-RJ

(Linear Servo Motor: LM-H3 Series/LM-F Series/LM-K2 Series/LM-U2 Series)

Linear Servo System with MR-J5-G-RJ(N1)/MR-J5-B-RJ/MR-J5-A-RJ

●Connecting a serial linear encoder

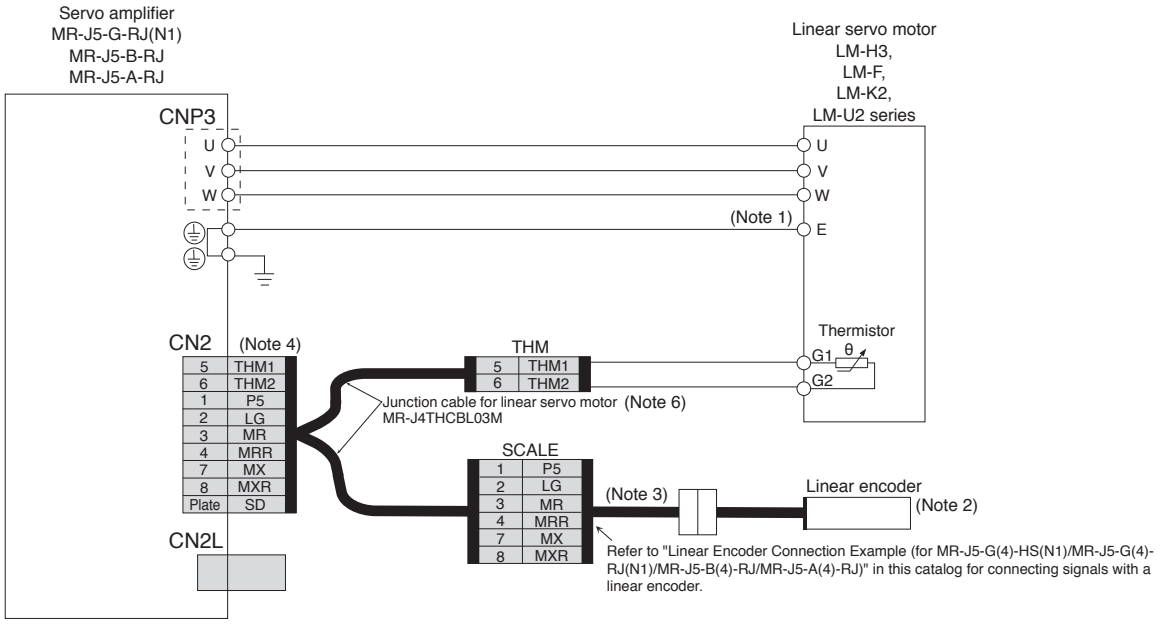

●Connecting an A/B/Z-phase differential output linear encoder

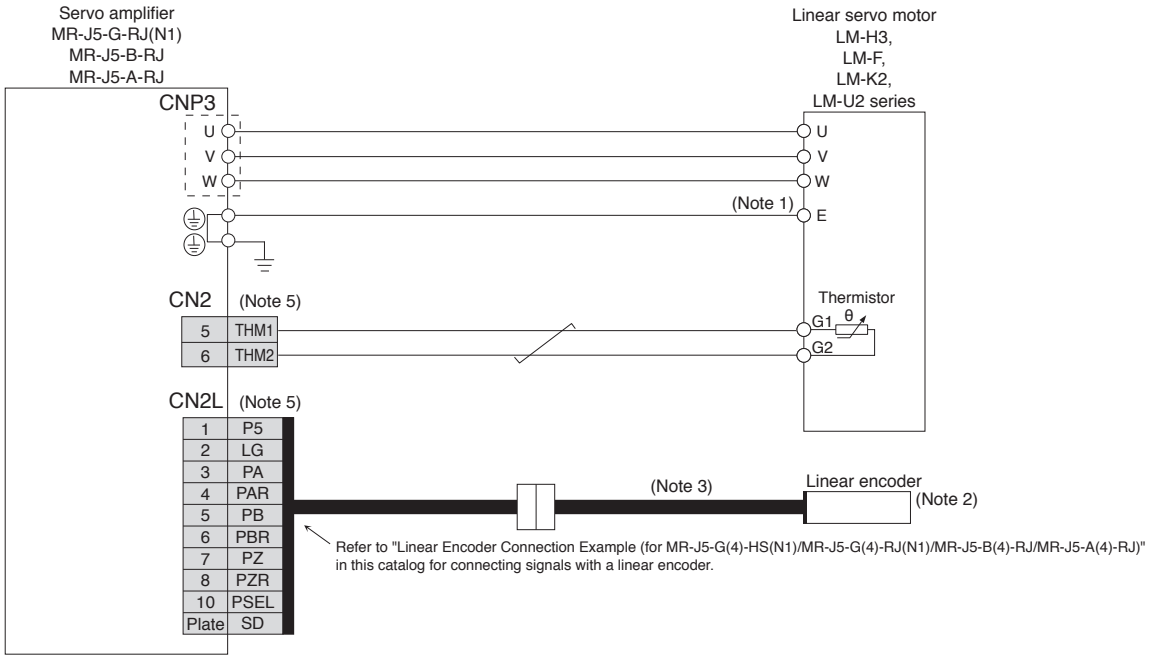

Notes:
1. Connect the grounding wire to the cabinet protective earth (PE) terminal via the servo amplifier for grounding the servo motor.
2. For linear encoders, refer to "List of Linear Encoders" in this catalog.
3. Necessary cables vary depending on the linear encoder. Refer to "MR-J5 Partner's Encoder User's Manual" for details.
4. When configuring a linear servo system with MR-J5-G-RJ(N1)/MR-J5-B-RJ/MR-J5-A-RJ and a serial linear encoder, connect MR-J4THCBL03M junction cable or a junction cable fabricated using MR-J3THMCN2 connector set to CN2 connector.
5. When configuring a linear servo system with MR-J5-G-RJ(N1)/MR-J5-B-RJ/MR-J5-A-RJ and an A/B/Z-phase differential output type linear encoder, connect a thermistor to CN2 connector and the linear encoder to CN2L connector. Do not use MR-J4THCBL03M junction cable or a junction cable fabricated using MR-J3THMCN2 connector set.
6. MR-J4THCBL03M junction cable for linear servo motor is compatible with both two-wire and four-wire type linear encoders.

Be sure to read through User's Manual for the actual wiring and use. Use the equipment after you have a full knowledge of the equipment, safety information and instructions.

Servo Motor Connection Example (Linear Servo Motor: LM-AJ Series)

G-RJ A-RJ

Linear Servo System with MR-J5-G-RJ/MR-J5-G-RJN1/MR-J5-A-RJ

●Connecting a serial linear encoder

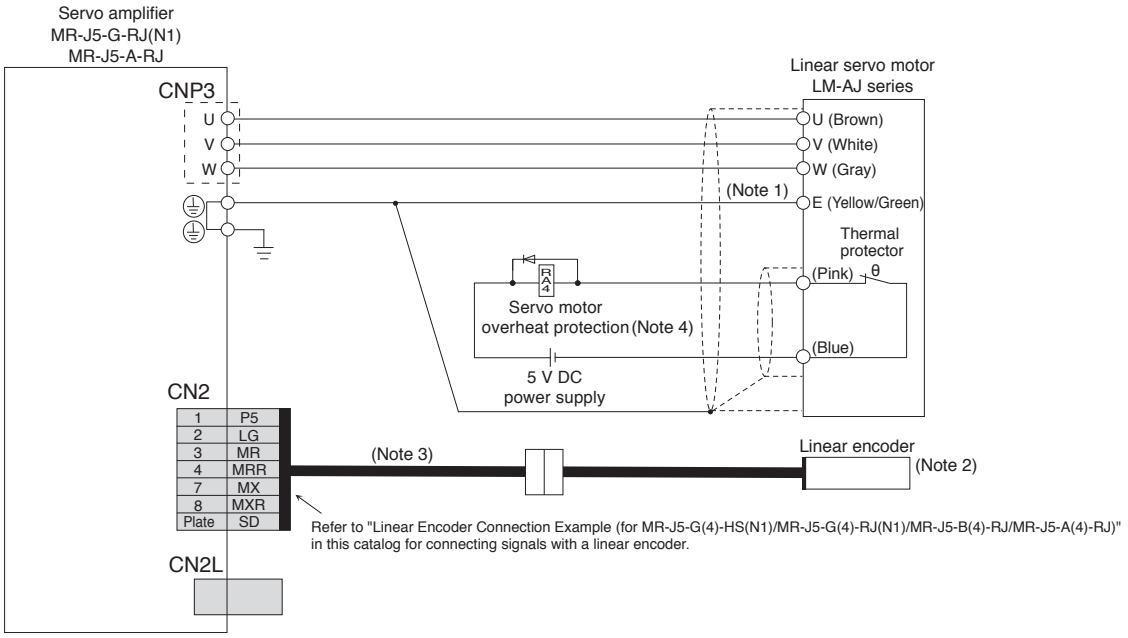

●Connecting an A/B/Z-phase differential output linear encoder

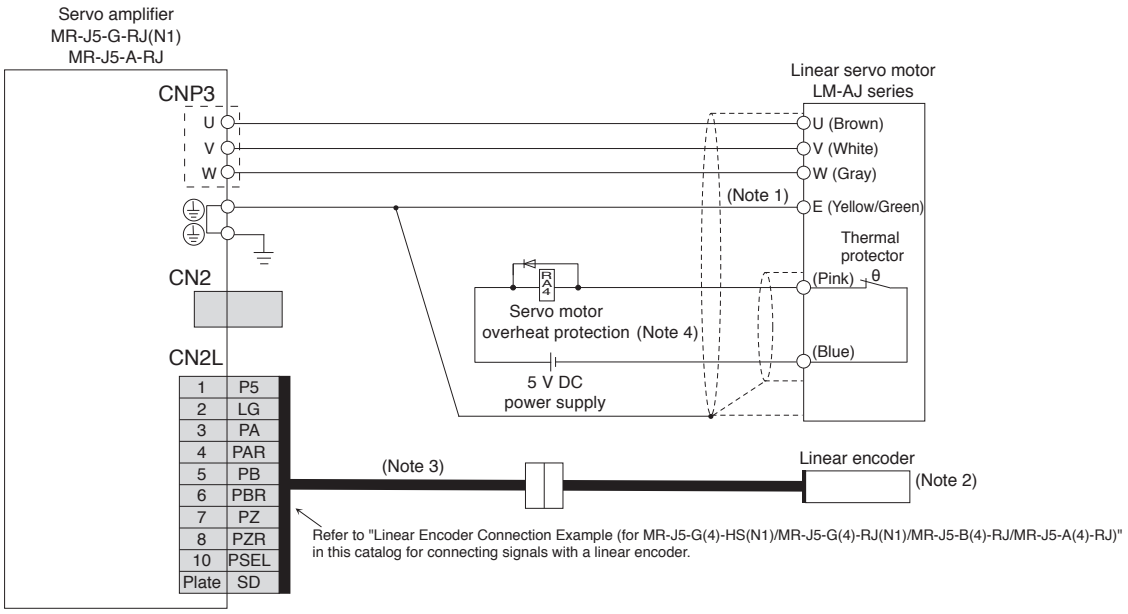

Notes: 1. Connect the grounding wire to the cabinet protective earth (PE) terminal via the servo amplifier for grounding the servo motor.
2. For linear encoders, refer to "List of Linear Encoders" in this catalog.
3. Necessary cables vary depending on the linear encoder. Refer to "MR-J5 Partner's Encoder User's Manual" for details.
4. Create a relay circuit to turn off the main circuit power supply when the thermal protector is opened by overheating. Use a relay designed for a flowing current of 1000 mA or less. If a mechanical relay is used, use a relay designed for a flowing current of 50 mA to 1000 mA.

Be sure to read through User's Manual for the actual wiring and use. Use the equipment after you have a full knowledge of the equipment, safety information and instructions.

Servo Motor Connection Example (Linear Servo Motor: LM-AU Series)

G-RJ A-RJ

Linear Servo System with MR-J5-G-RJ/MR-J5-G-RJN1/MR-J5-A-RJ

●Connecting a serial linear encoder

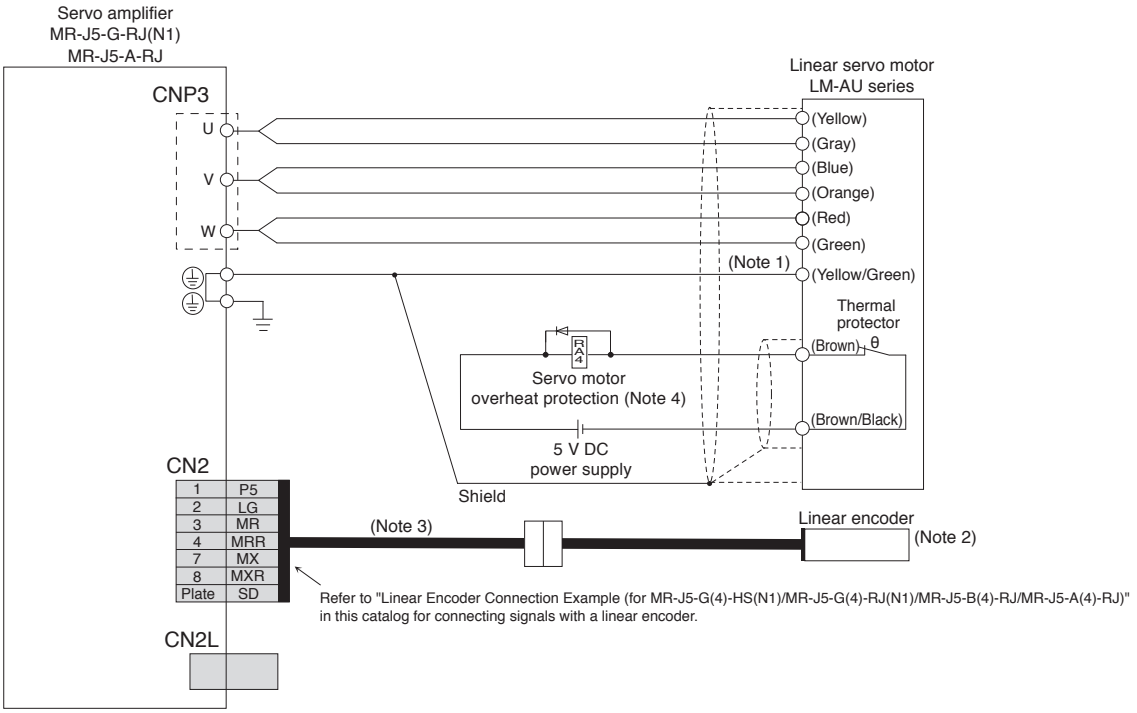

●Connecting an A/B/Z-phase differential output linear encoder

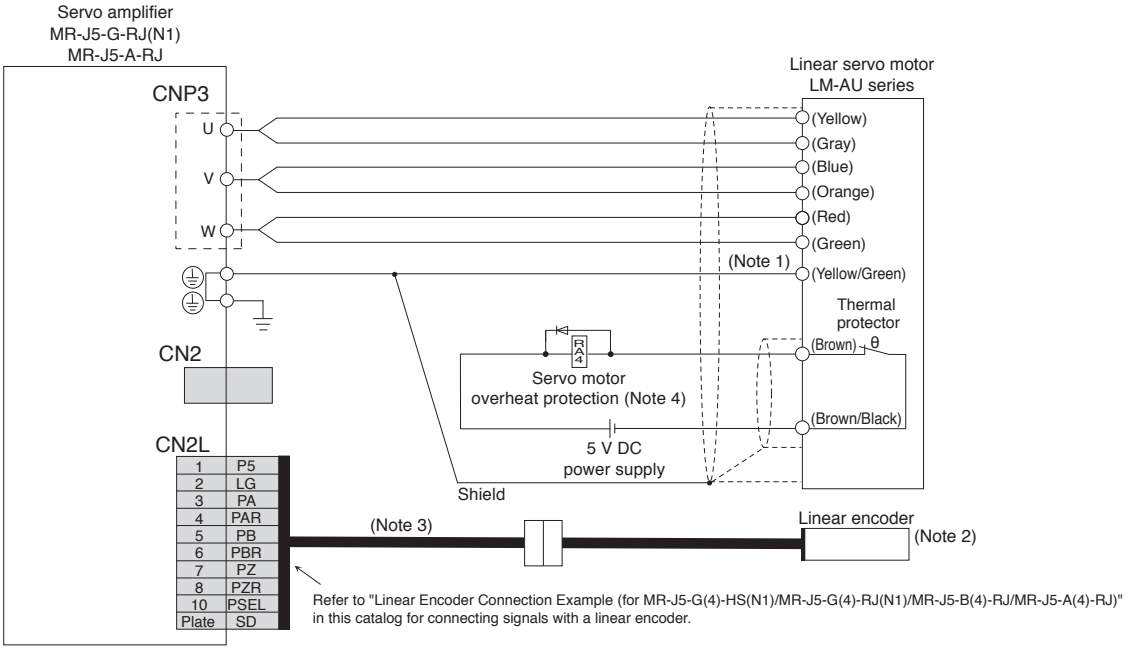

Notes: 1. Connect the grounding wire to the cabinet protective earth (PE) terminal via the servo amplifier for grounding the servo motor.
2. For linear encoders, refer to "List of Linear Encoders" in this catalog.
3. Necessary cables vary depending on the linear encoder. Refer to "MR-J5 Partner's Encoder User's Manual" for details.
4. Create a relay circuit to turn off the main circuit power supply when the thermal protector is opened by overheating. Use a relay designed for a flowing current of 1000 mA or less. If a mechanical relay is used, use a relay designed for a flowing current of 50 mA to 1000 mA.

Be sure to read through User's Manual for the actual wiring and use. Use the equipment after you have a full knowledge of the equipment, safety information and instructions.

Linear Encoder Connection Example

G-HS G-RJ B-RJ A-RJ

(for MR-J5-G(4)-HS(N1)/MR-J5-G(4)-RJ(N1)/MR-J5-B(4)-RJ/MR-J5-A(4)-RJ)

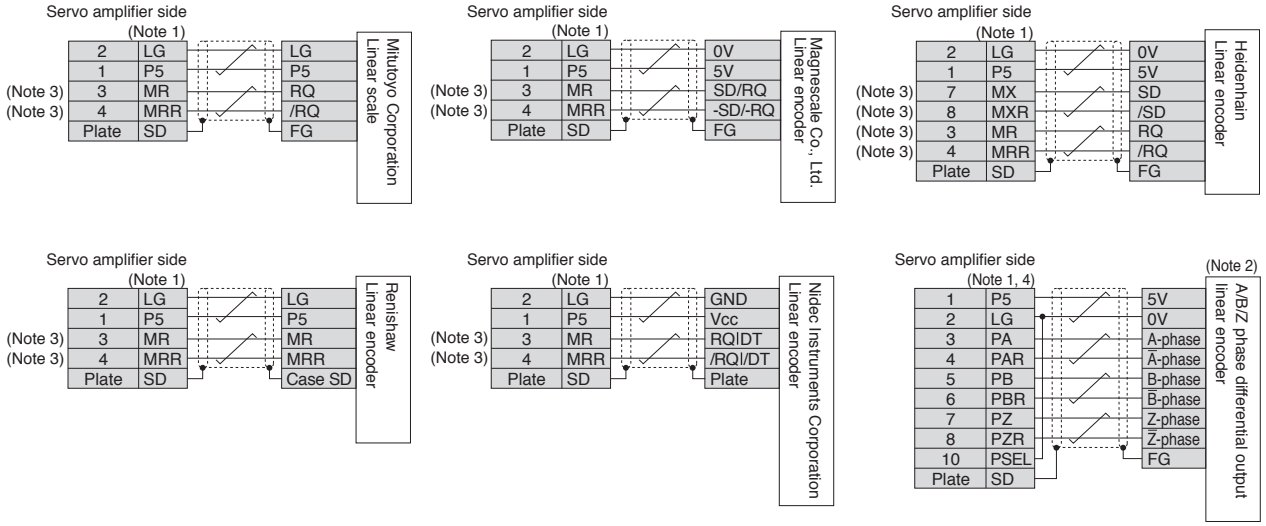

Notes: 1. For the number of the wire pairs for LG and P5, refer to "MR-J5 Partner's Encoder User's Manual".
2. If the encoder's current consumption exceeds 350 mA, supply power from an external source.
3. For the fully closed loop control, the signals of 3-pin, 4-pin, 7-pin, and 8-pin of the CN2L connector are as follows:
3-pin: MR2
4-pin: MRR2
7-pin: MX2
8-pin: MXR2
4. For the connection of the A/B/Z-phase differential output method using the fully closed loop control system or the scale measurement function, refer to "MR-J5 User's Manual" and "MR-J5 Partner's Encoder User's Manual".

Be sure to read through User's Manual for the actual wiring and use. Use the equipment after you have a full knowledge of the equipment, safety information and instructions.

MR-J5-G_ Dimensions

G G-RJ

●MR-J5-10G(-N1), MR-J5-10G-RJ(N1)
●MR-J5-20G(-N1), MR-J5-20G-RJ(N1)
●MR-J5-40G(-N1), MR-J5-40G-RJ(N1)

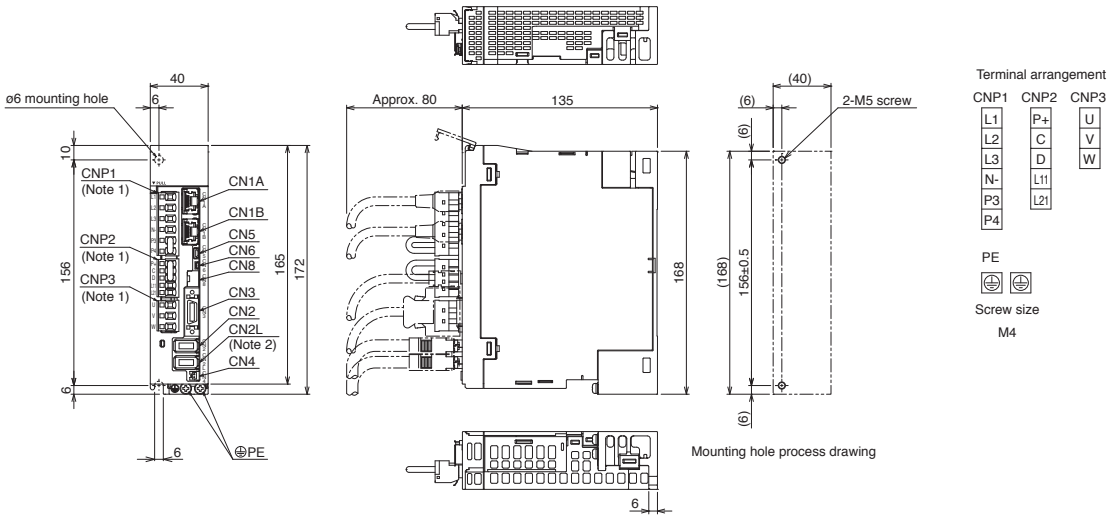

[Unit: mm]

●MR-J5-60G(-N1), MR-J5-60G-RJ(N1)

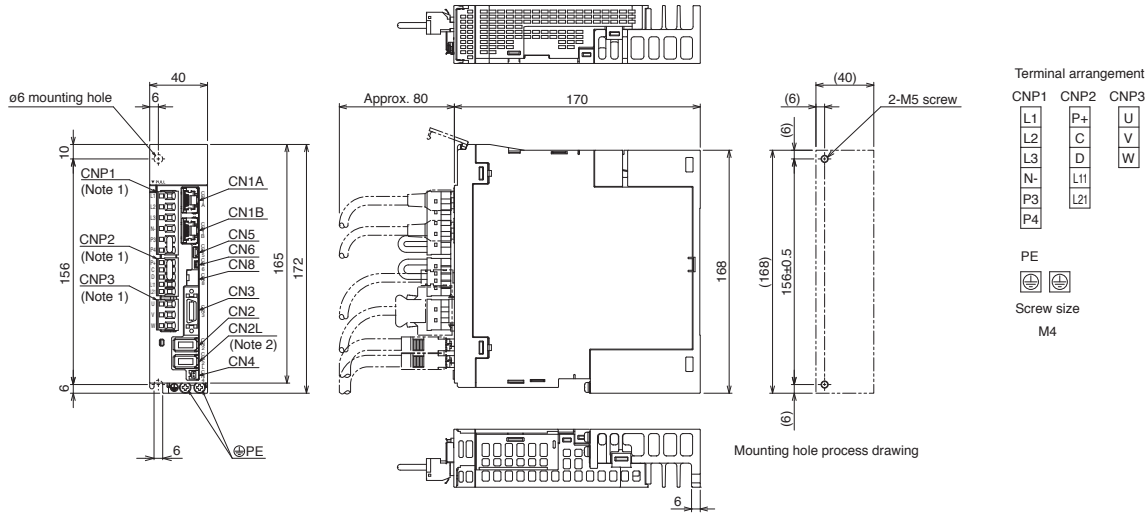

[Unit: mm]

Notes: 1. CNP1, CNP2, and CNP3 connectors are supplied with the servo amplifier.
2. CN2L connector is not available for MR-J5-G(-N1) servo amplifiers.

MR-J5-G_ Dimensions

G G-RJ

●MR-J5-70G(-N1), MR-J5-70G-RJ(N1)

●MR-J5-100G(-N1), MR-J5-100G-RJ(N1)

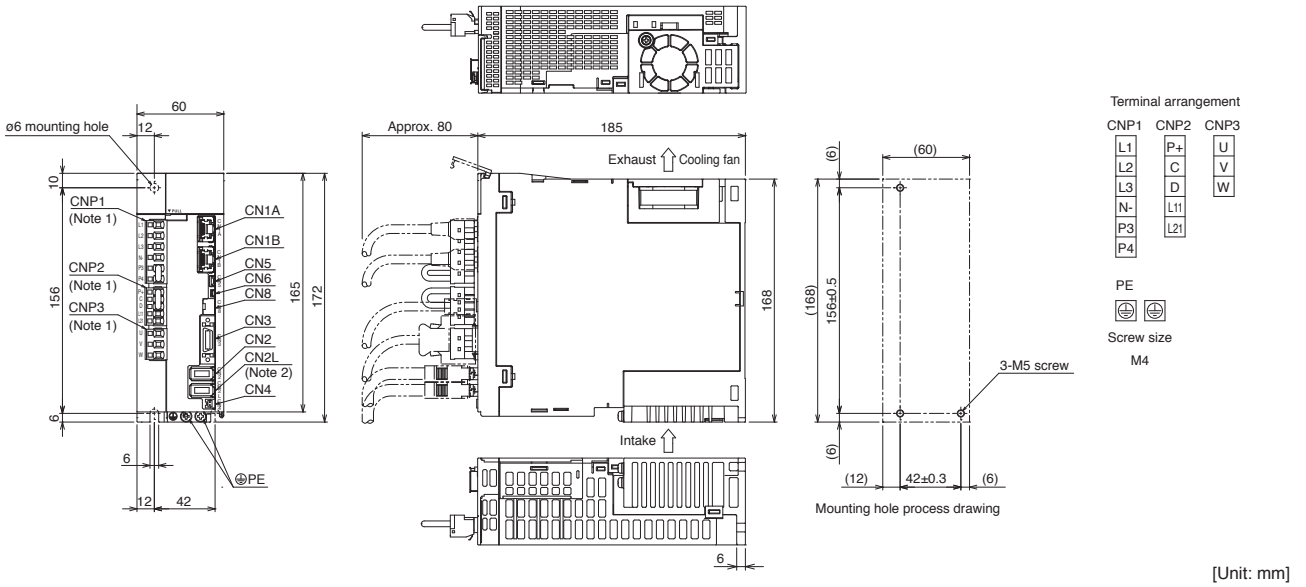

[Unit: mm]

●MR-J5-200G(-N1), MR-J5-200G-RJ(N1) (Note 3)

●MR-J5-350G(-N1), MR-J5-350G-RJ(N1) (Note 3)

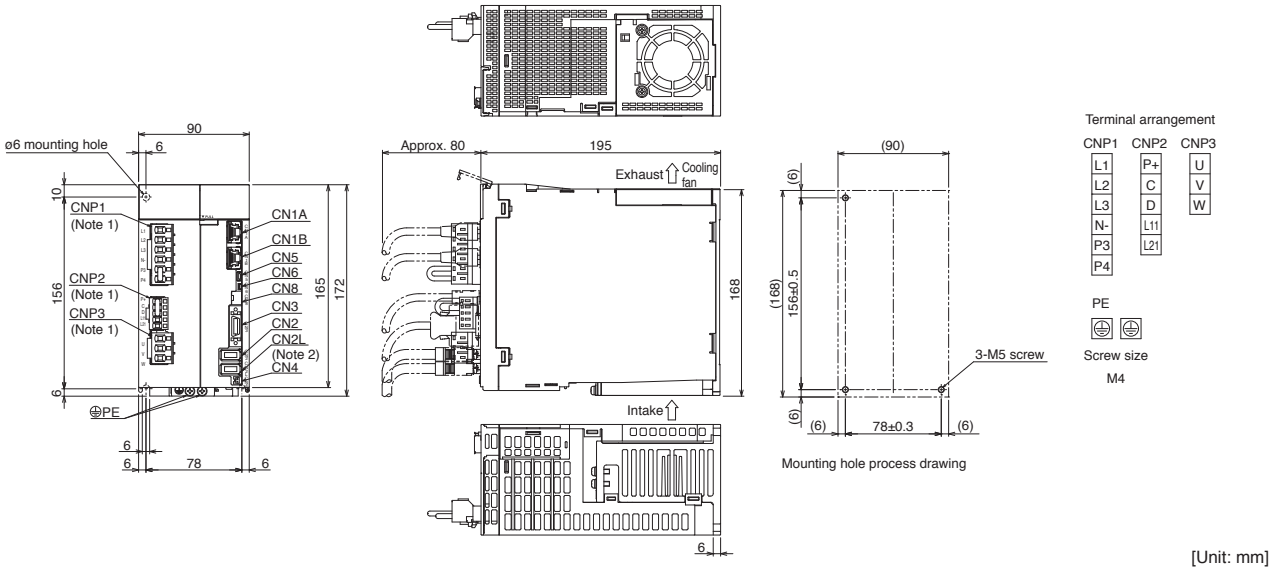

[Unit: mm]

Notes: 1. CNP1, CNP2, and CNP3 connectors are supplied with the servo amplifier.
2. CN2L connector is not available for MR-J5-G(-N1) servo amplifiers.
3. For the servo amplifiers manufactured in August 2022 or later, the fan unit is mounted with two screws. Refer to "Mitsubishi Electric AC Servo System Sales and Service No. 22-02E" for details.

MR-J5-G_ Dimensions

G G-RJ

●MR-J5-500G(-N1), MR-J5-500G-RJ(N1)

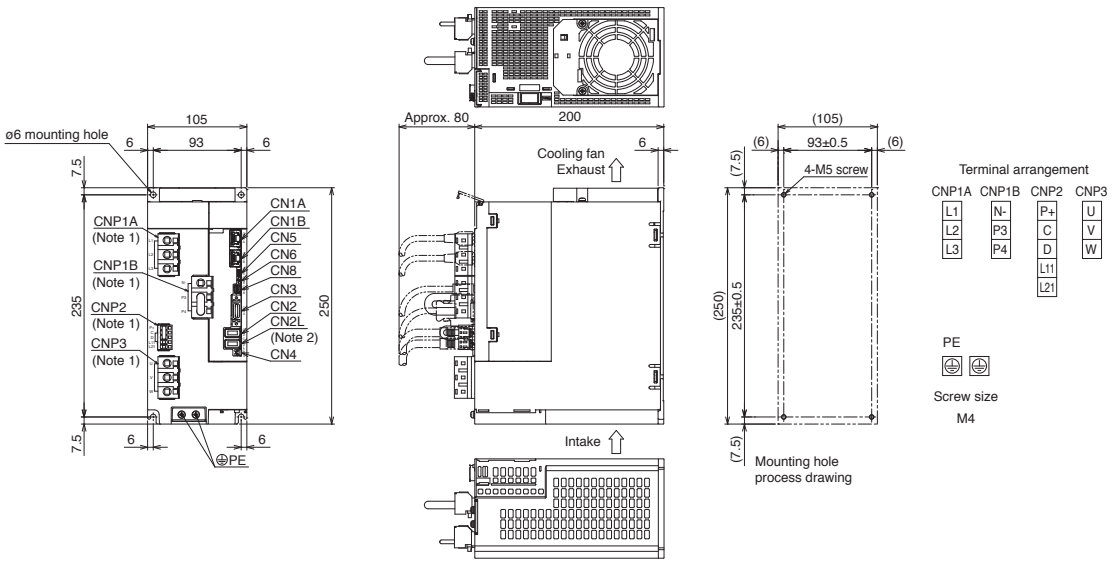

[Unit: mm]

●MR-J5-700G(-N1), MR-J5-700G-RJ(N1)

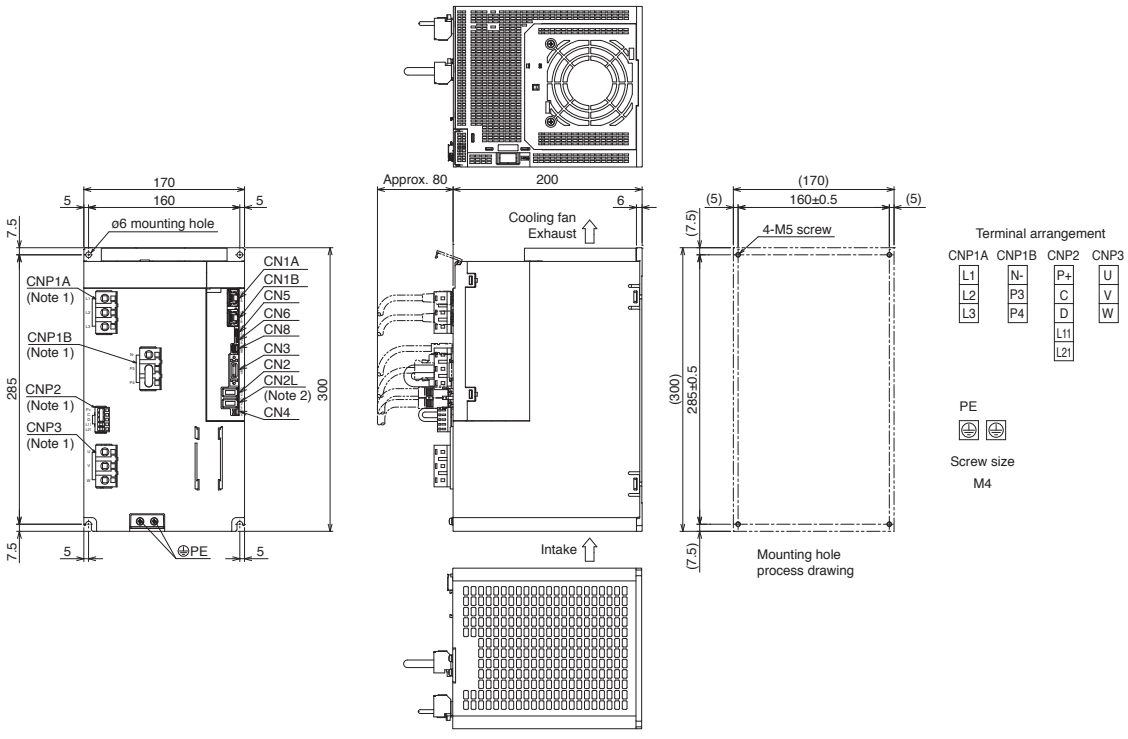

[Unit: mm]

Notes: 1. CNP1A, CNP1B, CNP2, and CNP3 connectors are supplied with the servo amplifier.
2. CN2L connector is not available for MR-J5-G(-N1) servo amplifiers.

MR-J5-G_ Dimensions

G G-HS G-RJ

●MR-J5-60G4(-N1), MR-J5-60G4-RJ(N1)

●MR-J5-100G4(-N1), MR-J5-100G4-RJ(N1)

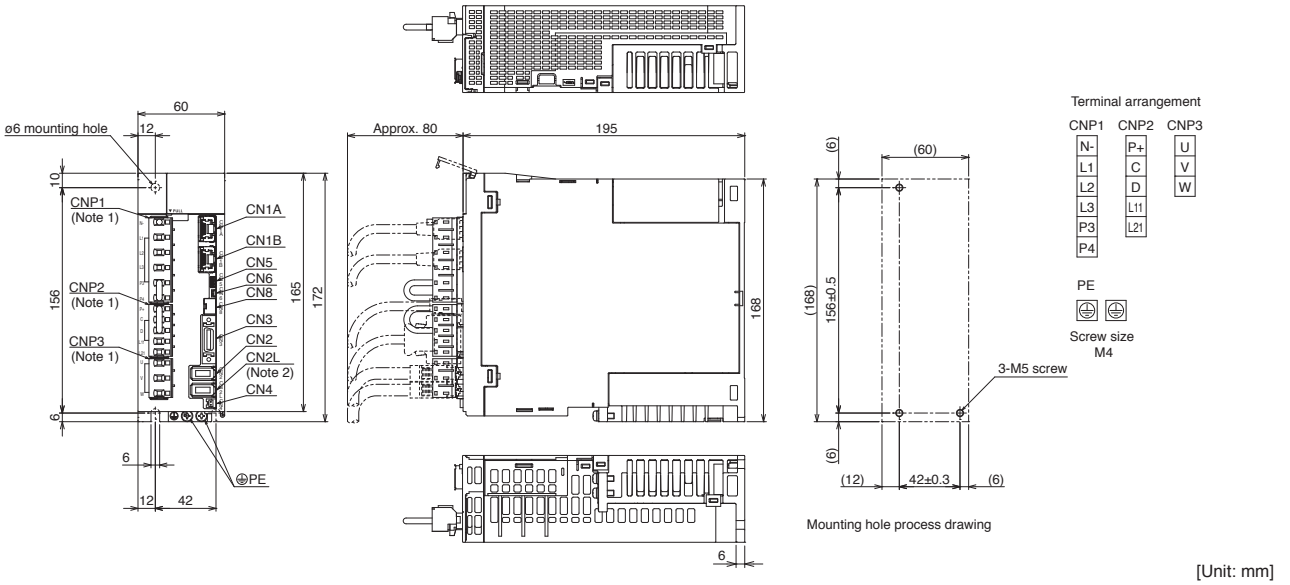

[Unit: mm]

●MR-J5-60G4-HS(N1)

●MR-J5-100G4-HS(N1)

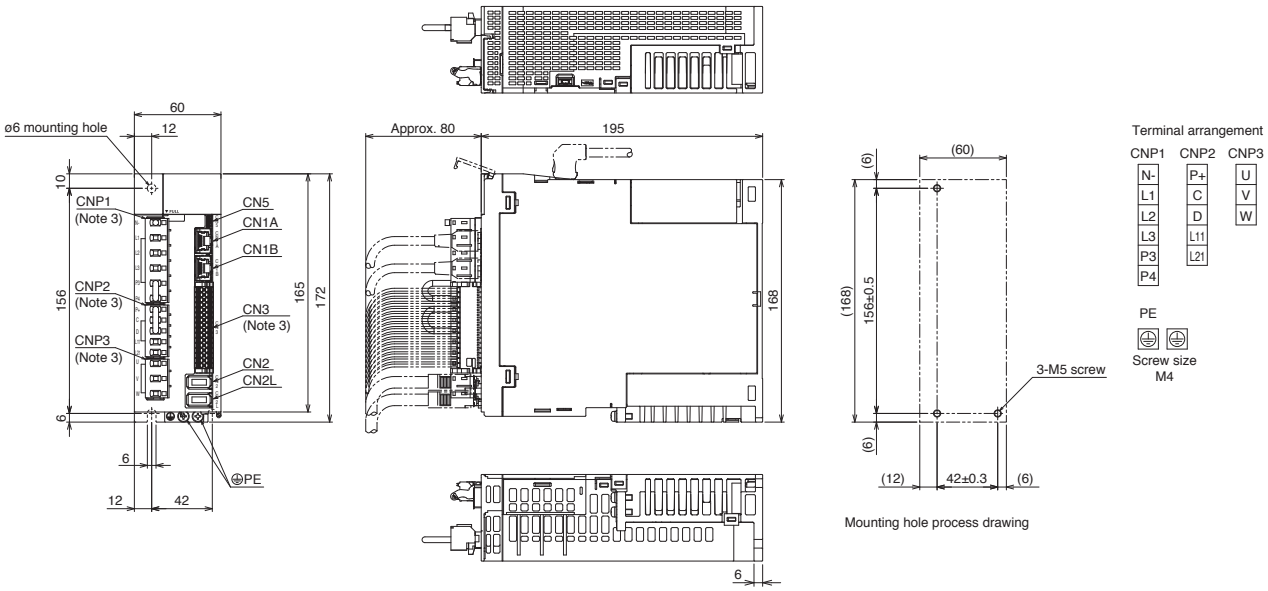

[Unit: mm]

Notes: 1. CNP1, CNP2, and CNP3 connectors are supplied with the servo amplifier.
2. CN2L connector is not available for MR-J5-G4(-N1) servo amplifiers.
3. CNP1, CNP2, CNP3, and CN3 connectors are supplied with the servo amplifier.

MR-J5-G_ Dimensions

G G-HS G-RJ

●MR-J5-200G4(-N1), MR-J5-200G4-RJ(N1) (Note 3)

●MR-J5-350G4(-N1), MR-J5-350G4-RJ(N1) (Note 3)

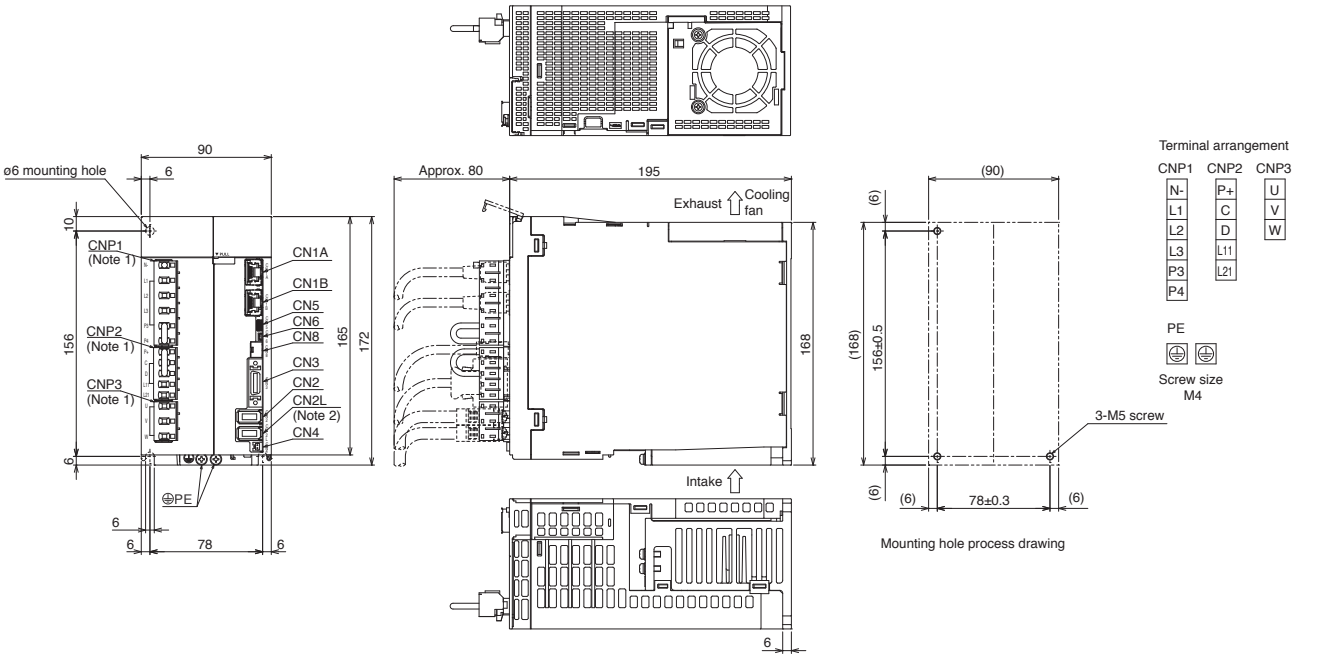

[Unit: mm]

●MR-J5-200G4-HS(N1)

●MR-J5-350G4-HS(N1)

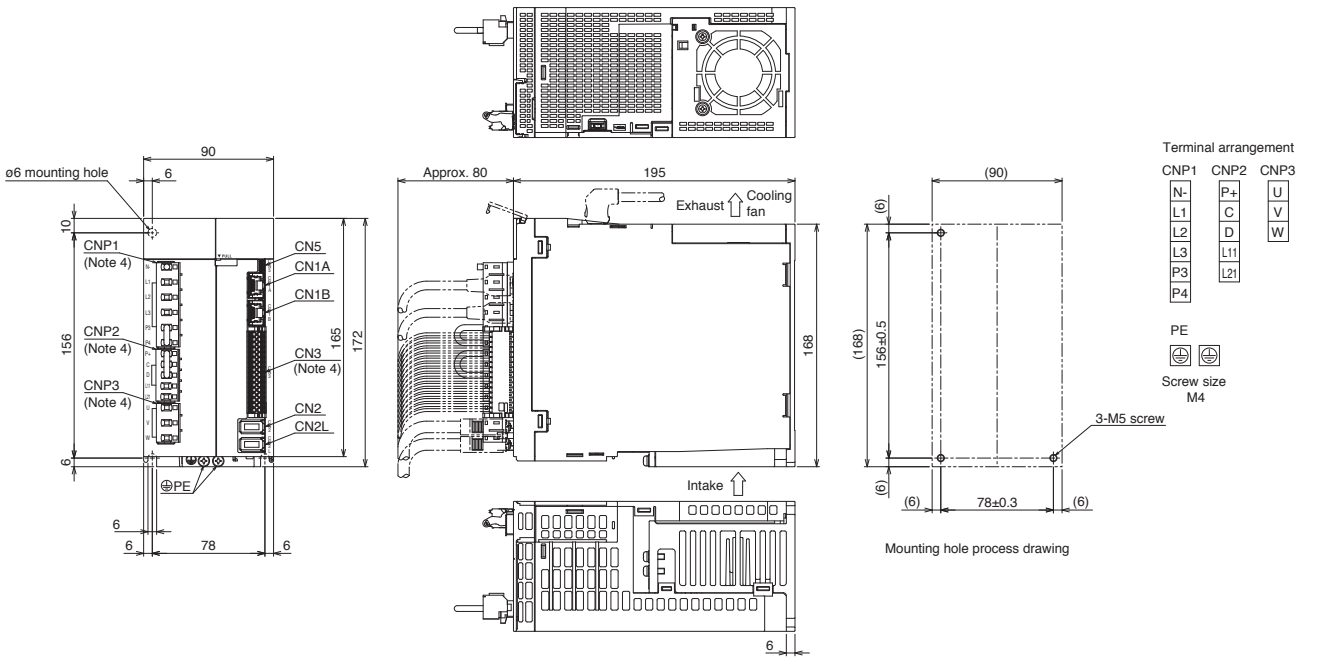

[Unit: mm]

Notes: 1. CNP1, CNP2, and CNP3 connectors are supplied with the servo amplifier.
2. CN2L connector is not available for MR-J5-G4(-N1) servo amplifiers.
3. For the servo amplifiers manufactured in August 2022 or later, the fan unit is mounted with two screws. Refer to "Mitsubishi Electric AC Servo System Sales and Service No. 22-02E" for details.
4. CNP1, CNP2, CNP3, and CN3 connectors are supplied with the servo amplifier.

MR-J5-G_ Dimensions

G G-HS

●MR-J5-500G4(-N1), MR-J5-700G4(-N1)

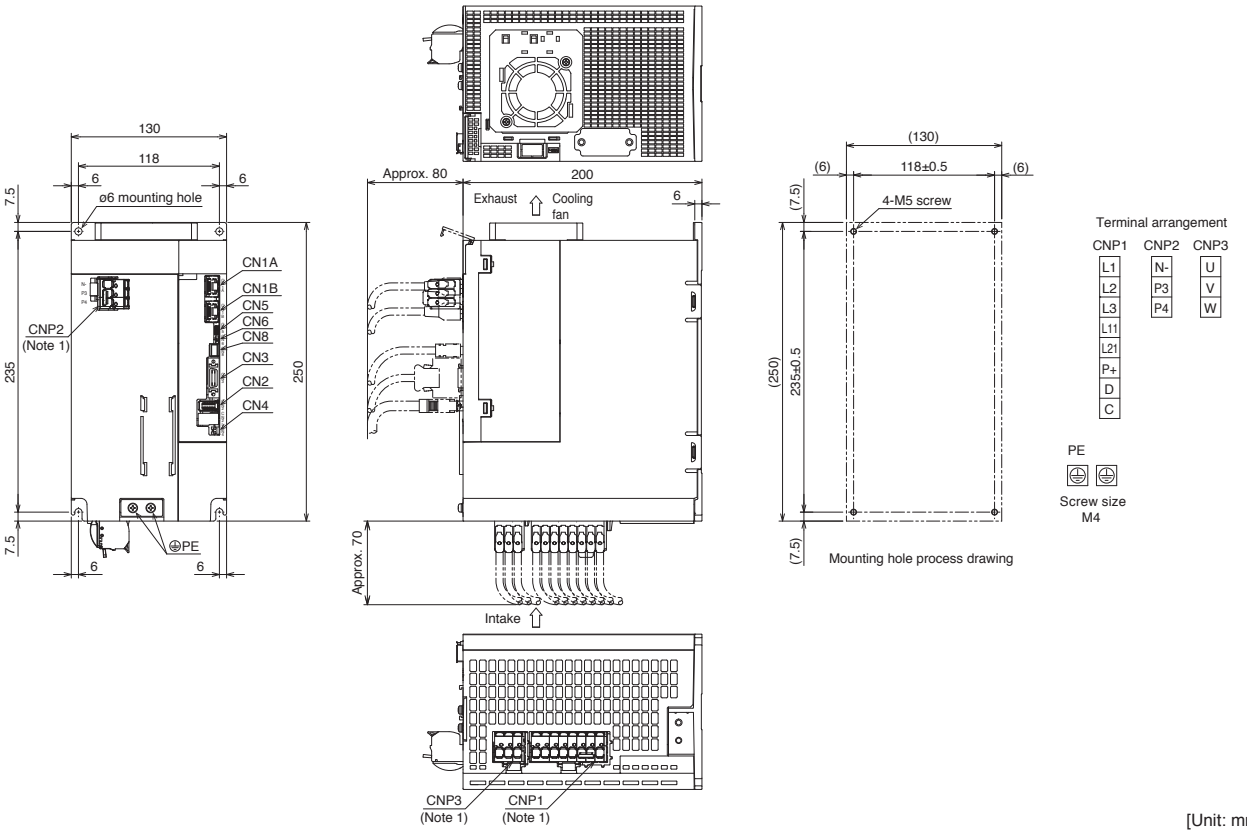

[Unit: mm]

●MR-J5-500G4-HS(N1), MR-J5-700G4-HS(N1)

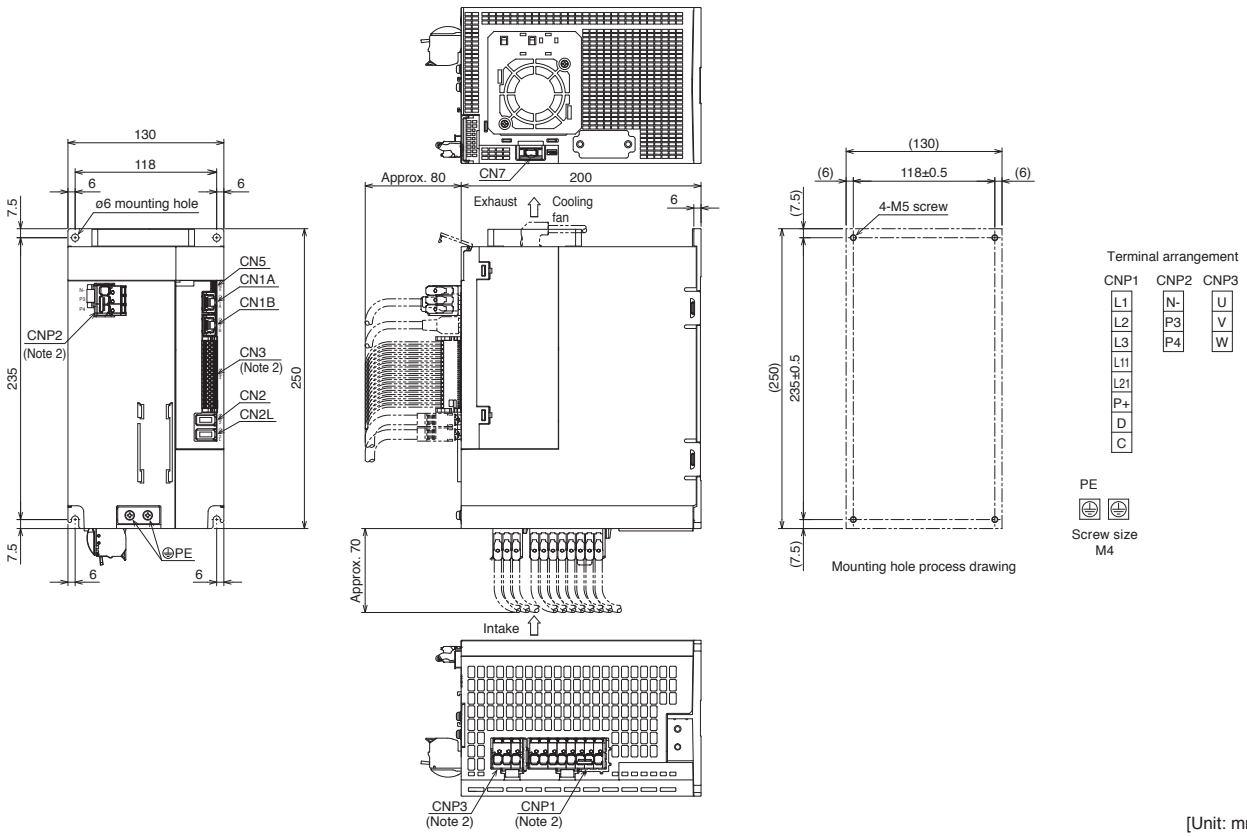

[Unit: mm]

Notes: 1. CNP1, CNP2, and CNP3 connectors are supplied with the servo amplifier.
2. CNP1, CNP2, CNP3, and CN3 connectors are supplied with the servo amplifier.

MR-J5-G_ Dimensions

G G-HS

●MR-J5-12KG(4)(-N1), MR-J5-17KG(4)(-N1)

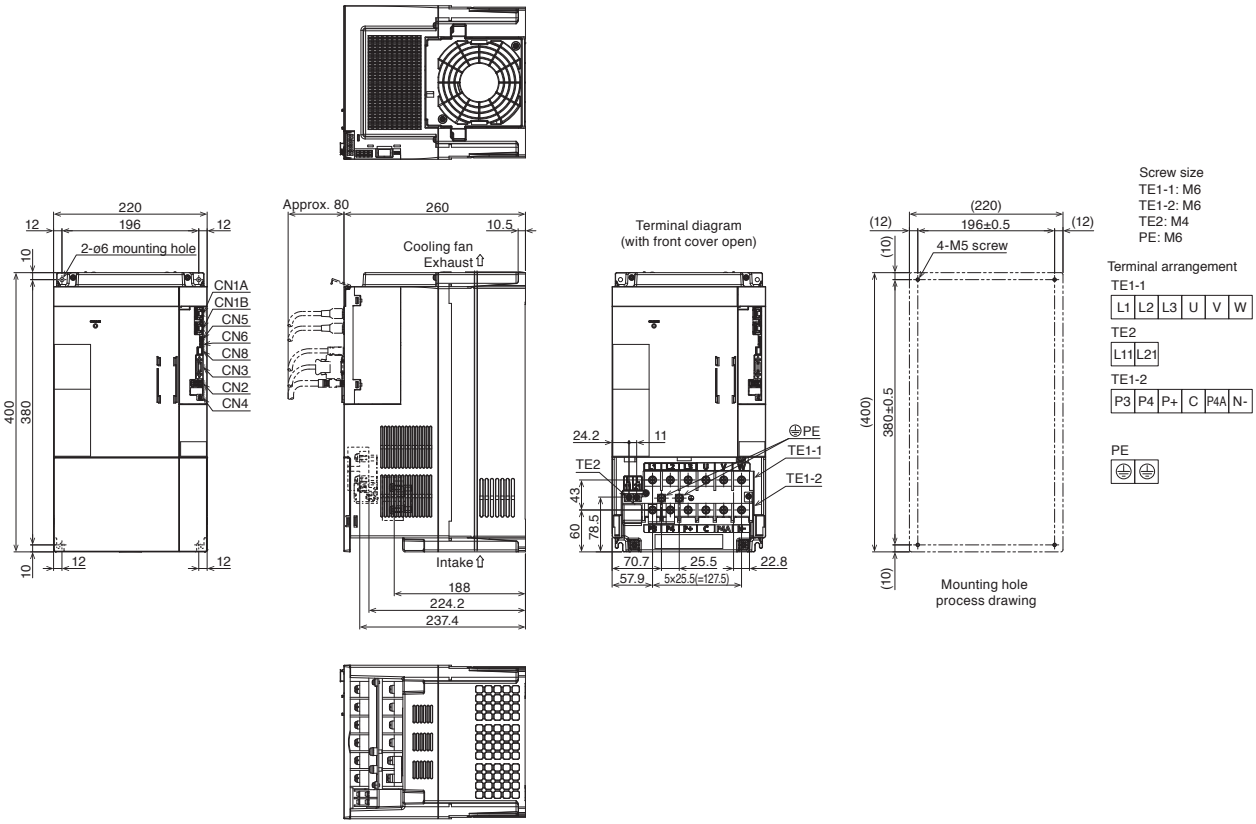

[Unit: mm]

●MR-J5-12KG(4)-HS(N1), MR-J5-17KG(4)-HS(N1)

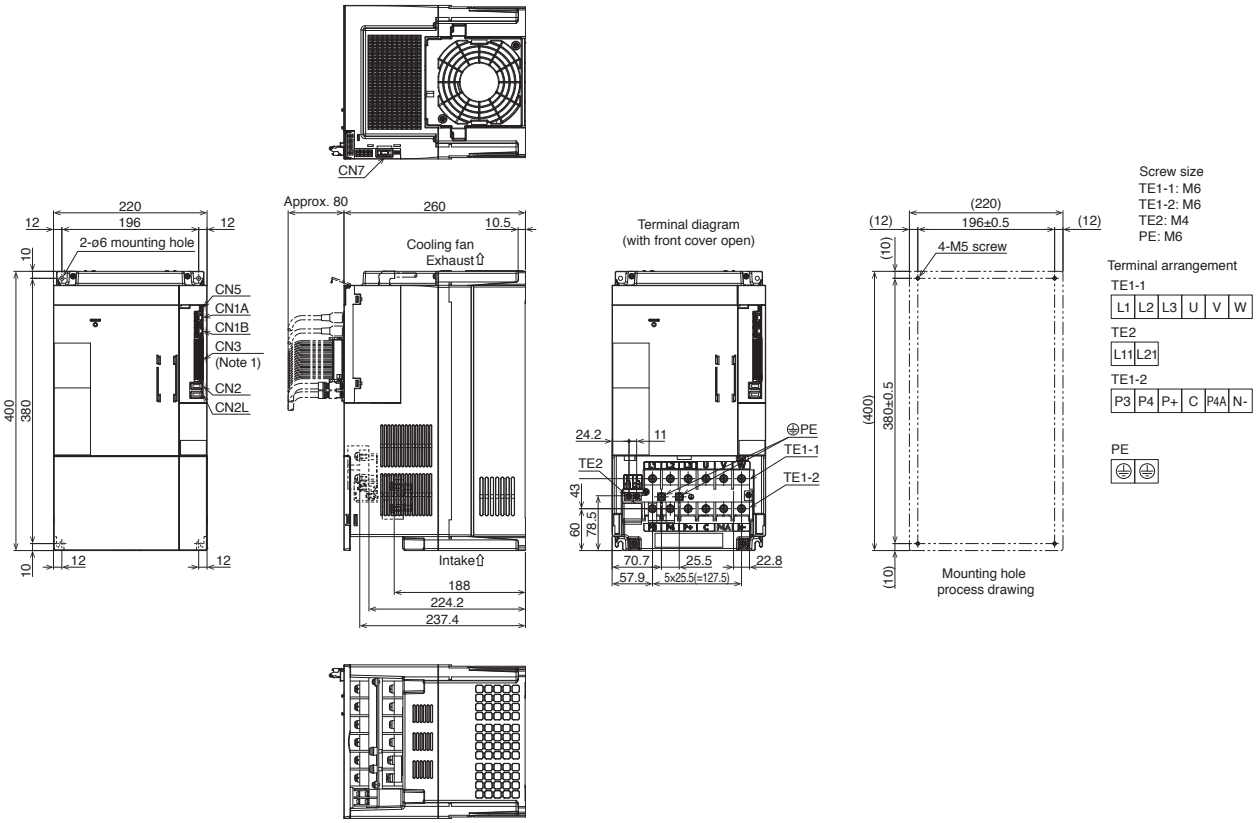

[Unit: mm]

Notes: 1. CN3 connector is supplied with the servo amplifier.

MR-J5-G_ Dimensions

G G-HS

●MR-J5-25KG(4)(-N1)

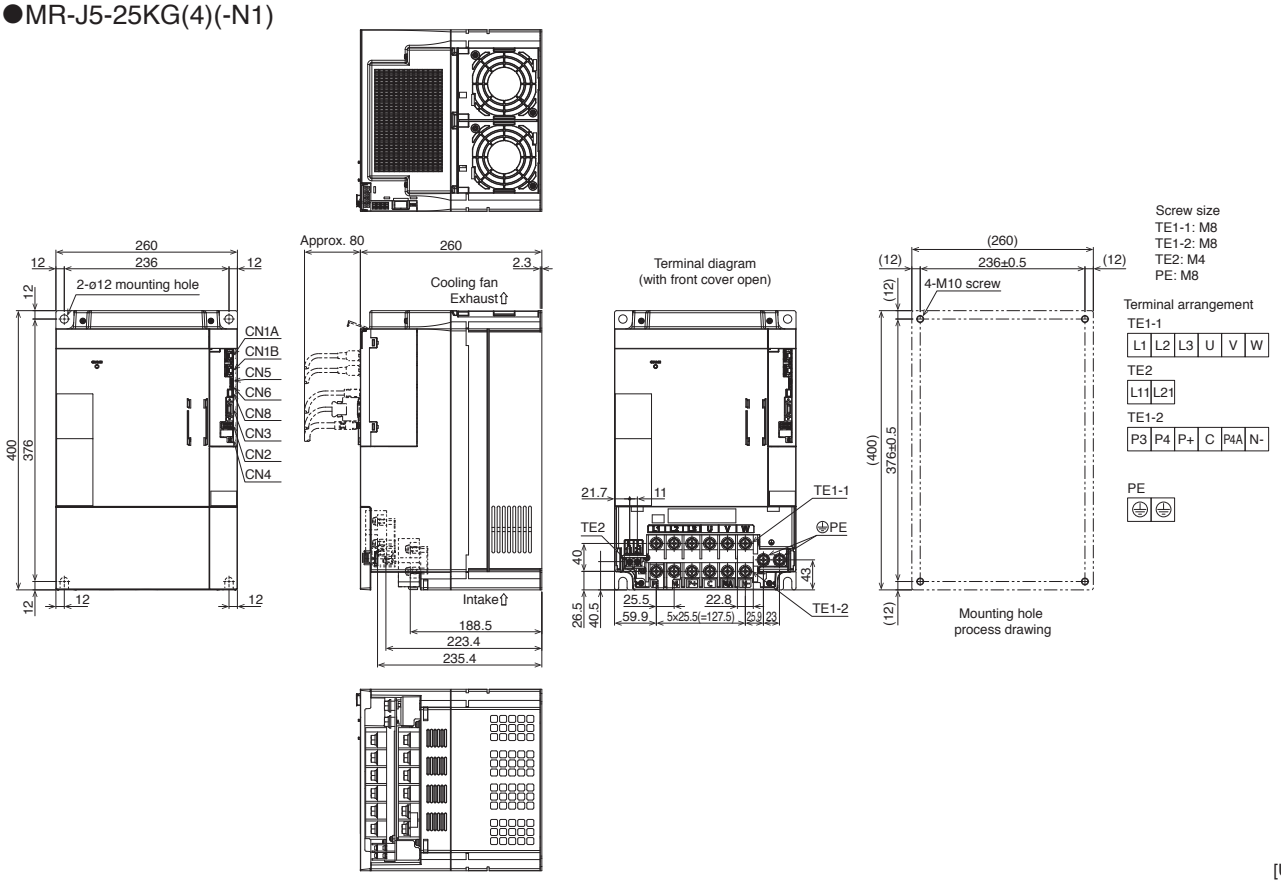

[Unit: mm]

●MR-J5-25KG(4)-HS(N1)

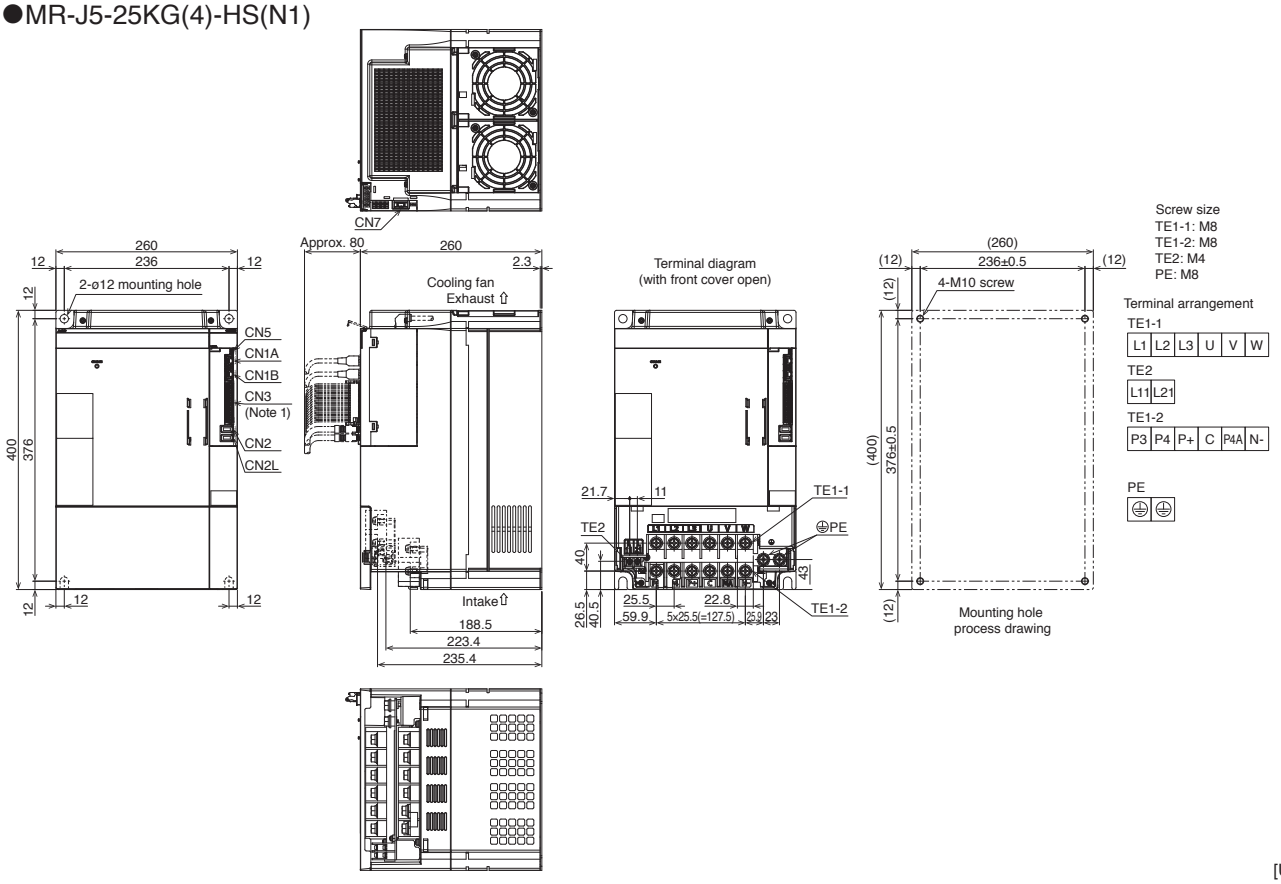

[Unit: mm]

Notes: 1. CN3 connector is supplied with the servo amplifier.

MR-J5W_-G(-N1) Connections with Peripheral Equipment (Note 1)

WG

Peripheral equipment is connected to MR-J5W_-G(-N1) as described below. Connectors, cables, options, and other necessary equipment are available so that users can set up the servo amplifier easily and start using it right away.

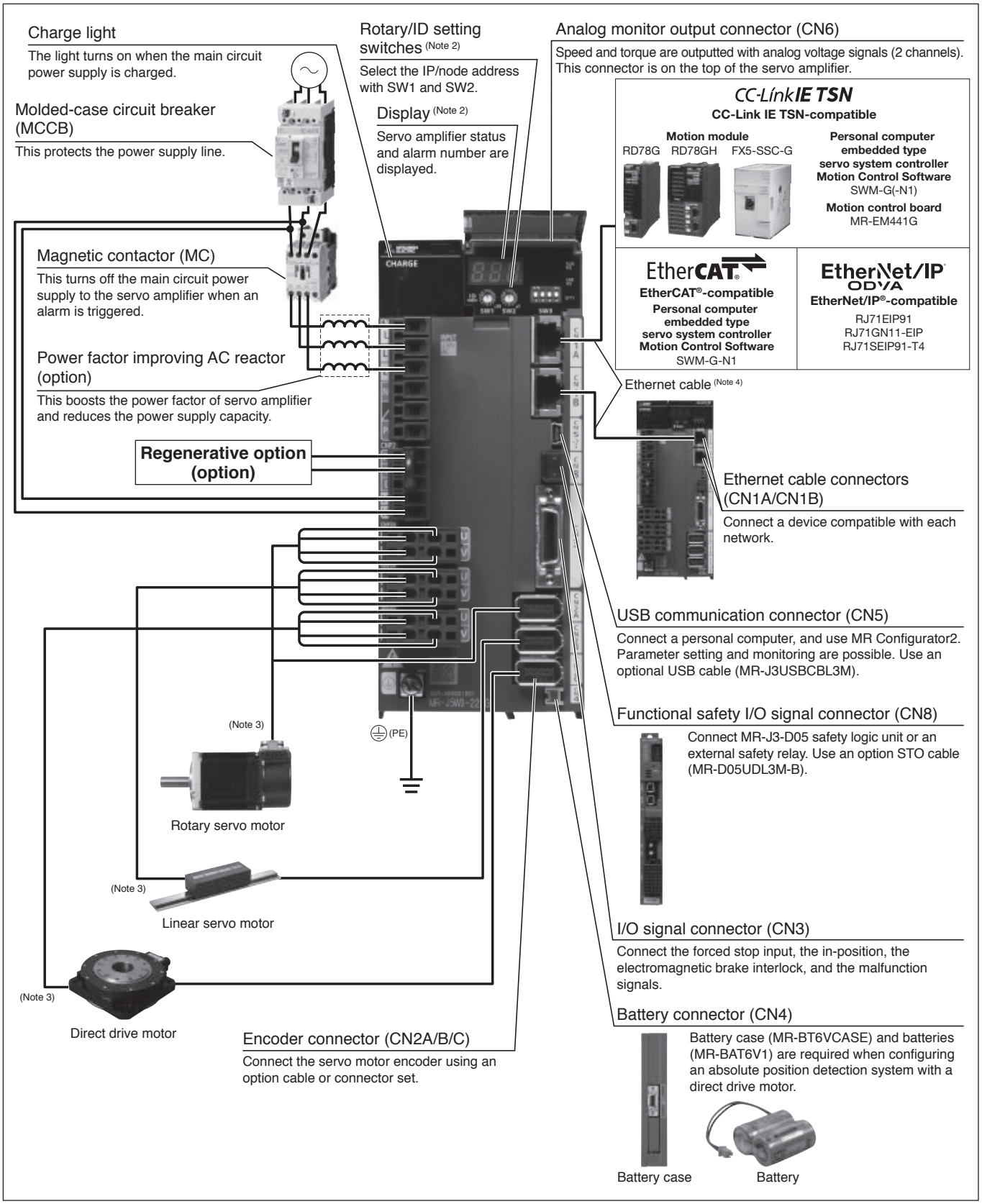

Notes: 1. The connection with the peripheral equipment is an example for MR-J5W3-222G(-N1). CNP3C and CN2C connectors are not available on MR-J5W2-G(-N1). Refer to "MR-J5 User's Manual" for the actual connections of each multi-axis servo amplifier.
2. This picture shows the display cover open.
3. Connect the grounding wire to the cabinet protective earth (PE) terminal via the servo amplifier for grounding the servo motor.
4. For specifications of the Ethernet cable, refer to "Ethernet Cable Specifications" in this catalog.

MR-J5W2-G(-N1) (2-Axis, Network Compatible) Specifications

WG

Servo amplifier model MR-J5W2-_(-N1)			22G	44G	77G	1010G
Output	Voltage		3-phase 0 V AC to 240 V AC			
	Rated current (each axis) [A]		1.8	2.8	5.8	6.0
Main circuit power supply input	Voltage/ frequency (Note 1)	AC input	3-phase or 1-phase 200 V AC to 240 V AC, 50 Hz/60 Hz			3-phase 200 V AC to 240 V AC, 50 Hz/60 Hz
		DC input (Note 8)	283 V DC to 340 V DC			
	Rated current [A] (Note 6)	AC input	2.9 (5.0)	5.2 (9.0)	7.5 (13.0)	9.8
		DC input	3.5	6.4	9.2	12.0
	Permissible voltage fluctuation	AC input	3-phase or 1-phase 170 V AC to 264 V AC			3-phase 170 V AC to 264 V AC
		DC input (Note 8)	241 V DC to 374 V DC			
	Permissible frequency fluctuation		±5 % maximum			
Control circuit power supply input	Voltage/ frequency	AC input	1-phase 200 V AC to 240 V AC, 50 Hz/60 Hz			
		DC input (Note 8)	283 V DC to 340 V DC			
	Rated current [A]		0.4			
	Permissible voltage fluctuation	AC input	1-phase 170 V AC to 264 V AC			
		DC input (Note 8)	241 V DC to 374 V DC			
	Permissible frequency fluctuation		±5 % maximum			
	Power consumption [W]		55			
Interface power supply			24 V DC ± 10 % (required current capacity: 0.35 A (including CN8 connector signals))			
Control method			Sine-wave PWM control/current control method			
Permissible regenerative power of the built-in regenerative resistor (Note 2, 3) [W]			20		100	
Dynamic brake (Note 4)			Built-in			
CC-Link IE TSN Class B (Note 9) (MR-J5W2-G)	Communication cycle (Note 5, 12)		62.5 µs, 125 µs, 250 µs, 500 µs, 1 ms, 1.5 ms, 2 ms, 2.5 ms, 3 ms, 3.5 ms, 4 ms, 4.5 ms, 5 ms, 5.5 ms, 6 ms, 6.5 ms, 7 ms, 7.5 ms, 8 ms			
	Protocol version		1.0/2.0 (Note 11)			
CC-Link IE TSN Class A (Note 9, 11, 13) (MR-J5W2-G)	Communication cycle (Note 5)		500 µs to 500 ms			
	Protocol version		2.0			
EtherCAT® (MR-J5W2-G-N1)	Communication cycle (Note 5, 12)		250 µs, 500 µs, 1 ms, 2 ms, 4 ms, 8 ms			
EtherNet/IP® (Note 12) (MR-J5W2-G-N1)	Cycle time		Select from 1 ms to 100 ms			
CC-Link IE Field Network Basic			Not supported			
Communication function	USB		Connect a personal computer (MR Configurator2 compatible)			
Encoder output pulse			Compatible (A/B-phase pulse) (Note 12)			
Analog monitor			2 channels			
Positioning mode (Note 11, 12)			Point table method			
Fully closed loop control (Note 11, 12)			Supported			
Scale measurement function (Note 11, 12)			Supported			
Load-side encoder interface (Note 10)			Mitsubishi Electric high-speed serial communication			
Servo functions			Advanced vibration suppression control II, adaptive filter II, robust filter, quick tuning, auto tuning, one-touch tuning, tough drive function, drive recorder function, machine diagnosis function (including failure prediction), power monitoring function, lost motion compensation function, super trace control (Note 11), continuous operation to torque control mode (Note 11, 14)			
Protective functions			Overcurrent shut-off, regenerative overvoltage shut-off, overload shut-off (electronic thermal), servo motor overheat protection, encoder error protection, regenerative error protection, undervoltage protection, instantaneous power failure protection, overspeed protection, error excessive protection, magnetic pole detection protection, linear servo control fault protection			
Safety sub-function, Safety performance			Refer to "Safety Sub-Functions" in section 1 of this catalog.			
Structure (IP rating)			Natural cooling, open (IP20)	Force cooling, open (IP20)		
Close mounting			Possible (Note 7)			
Mass [kg]			1.5		1.9	

Notes:
1. Rated output and speed of a rotary servo motor and a direct drive motor; and continuous thrust and maximum speed of a linear servo motor are applicable when the servo amplifier is operated within the specified power supply voltage and frequency.
2. Select the most suitable regenerative option for your system with our Drive System Sizing Software Motorizer.
3. Refer to "Regenerative Option" in this catalog for the permissible regenerative power [W] when a regenerative option is used.
4. When using the dynamic brake, refer to "MR-J5 User's Manual" for the permissible load to motor inertia ratio and the permissible load to mass ratio.
5. The communication cycle depends on the controller specifications and the number of device stations connected.
6. The values in brackets are the rated current for the 1-phase power supply input.
7. When the servo amplifiers are closely mounted, keep the ambient temperature within 0 °C to 45 °C, or use the servo amplifiers at 75 % or less of the effective load ratio.
8. For a connection example of power supply circuit with DC input, refer to "MR-J5 User's Manual".
9. A communication speed of 1 Gbps/100 Mbps can be selected. When 100 Mbps is selected, the minimum communication cycle is 500 µs.
10. Not compatible with pulse train interface (A/B/Z-phase differential output type).
11. For the servo amplifier firmware version supporting each function, refer to "MR-J5 User's Manual".
12. For the restrictions on the communication cycle, refer to "Restrictions" in this catalog.
13. For the restrictions on the network, refer to "MR-J5 User's Manual".
14. The function is not available with MR-J5W_-G-N1.

MR-J5W3-G(-N1) (3-Axis, Network Compatible) Specifications

WG

Servo amplifier model MR-J5W3-_(-N1)			222G	444G
Output	Voltage		3-phase 0 V AC to 240 V AC	
	Rated current (each axis) [A]		1.8	2.8
Main circuit power supply input	Voltage/ frequency (Note 1)	AC input	3-phase or 1-phase 200 V AC to 240 V AC, 50 Hz/60 Hz	
		DC input (Note 8)	283 V DC to 340 V DC	
	Rated current [A] (Note 6)	AC input	4.3 (7.5)	7.8 (13.5)
		DC input	5.3	9.5
	Permissible voltage fluctuation	AC input	3-phase or 1-phase 170 V AC to 264 V AC	
		DC input (Note 8)	241 V DC to 374 V DC	
	Permissible frequency fluctuation		±5 % maximum	
Control circuit power supply input	Voltage/ frequency	AC input	1-phase 200 V AC to 240 V AC, 50 Hz/60 Hz	
		DC input (Note 8)	283 V DC to 340 V DC	
	Rated current [A]		0.4	
	Permissible voltage fluctuation	AC input	1-phase 170 V AC to 264 V AC	
		DC input (Note 8)	241 V DC to 374 V DC	
	Permissible frequency fluctuation		±5 % maximum	
	Power consumption [W]		55	
Interface power supply			24 V DC ± 10 % (required current capacity: 0.45 A (including CN8 connector signals))	
Control method			Sine-wave PWM control/current control method	
Permissible regenerative power of the built-in regenerative resistor (Note 2, 3) [W]			30	
Dynamic brake (Note 4)			Built-in	
CC-Link IE TSN Class B (Note 9) (MR-J5W3-G)	Communication cycle (Note 5, 11)		125 µs, 250 µs, 500 µs, 1 ms, 1.5 ms, 2 ms, 2.5 ms, 3 ms, 3.5 ms, 4 ms, 4.5 ms, 5 ms, 5.5 ms, 6 ms, 6.5 ms, 7 ms, 7.5 ms, 8 ms	
	Protocol version		1.0/2.0 (Note 10)	
CC-Link IE TSN Class A (Note 9, 10, 13) (MR-J5W3-G)	Communication cycle (Note 5)		500 µs to 500 ms	
	Protocol version		2.0	
EtherCAT® (MR-J5W3-G-N1)	Communication cycle (Note 5, 11)		250 µs, 500 µs, 1 ms, 2 ms, 4 ms, 8 ms	
EtherNet/IP® (Note 13) (MR-J5W3-G-N1)	Cycle time		Select from 1 ms to 100 ms	
CC-Link IE Field Network Basic			Not supported	
Communication function	USB		Connect a personal computer (MR Configurator2 compatible)	
Encoder output pulse	MR-J5W3-G		Compatible only with A-axis and B-axis (A/B-phase pulse) (Note 11, 12)	
	MR-J5W3-G-N1		Not compatible	
Analog monitor			2 channels	
Positioning mode (Note 10, 11)			Point table method	
Fully closed loop control			Not supported	
Scale measurement function			Not supported	
Servo functions			Advanced vibration suppression control II, adaptive filter II, robust filter, quick tuning, auto tuning, one-touch tuning, tough drive function, drive recorder function, machine diagnosis function (including failure prediction), power monitoring function, lost motion compensation function, super trace control (Note 10), continuous operation to torque control mode (Note 10, 14)	
Protective functions			Overcurrent shut-off, regenerative overvoltage shut-off, overload shut-off (electronic thermal), servo motor overheat protection, encoder error protection, regenerative error protection, undervoltage protection, instantaneous power failure protection, overspeed protection, error excessive protection, magnetic pole detection protection, linear servo control fault protection	
Safety sub-function, Safety performance			Refer to "Safety Sub-Functions" in section 1 of this catalog.	
Structure (IP rating)			Force cooling, open (IP20)	
Close mounting			Possible (Note 7)	
Mass [kg]			1.8	

Notes:
1. Rated output and speed of a rotary servo motor and a direct drive motor; and continuous thrust and maximum speed of a linear servo motor are applicable when the servo amplifier is operated within the specified power supply voltage and frequency.
2. Select the most suitable regenerative option for your system with our Drive System Sizing Software Motorizer.
3. Refer to "Regenerative Option" in this catalog for the permissible regenerative power [W] when a regenerative option is used.
4. When using the dynamic brake, refer to "MR-J5 User's Manual" for the permissible load to motor inertia ratio and the permissible load to mass ratio.
5. The communication cycle depends on the controller specifications and the number of device stations connected.
6. The values in brackets are the rated current for the 1-phase power supply input.
7. When the servo amplifiers are closely mounted, keep the ambient temperature within 0 °C to 45 °C, or use the servo amplifiers at 75 % or less of the effective load ratio.
8. For a connection example of power supply circuit with DC input, refer to "MR-J5 User's Manual".
9. A communication speed of 1 Gbps/100 Mbps can be selected. When 100 Mbps is selected, the minimum communication cycle is 500 µs.
10. For the servo amplifier firmware version supporting each function, refer to "MR-J5 User's Manual".
11. For the restrictions on the communication cycle, refer to "Restrictions" in this catalog.
12. When the command unit selection function (command unit/s) or the touch probe function is enabled, encoder output pulses are not outputted.
13. For the restrictions on the network, refer to "MR-J5 User's Manual".
14. The function is not available with MR-J5W_-G-N1.

MR-J5W2-G(-N1) Standard Wiring Diagram Example

WG

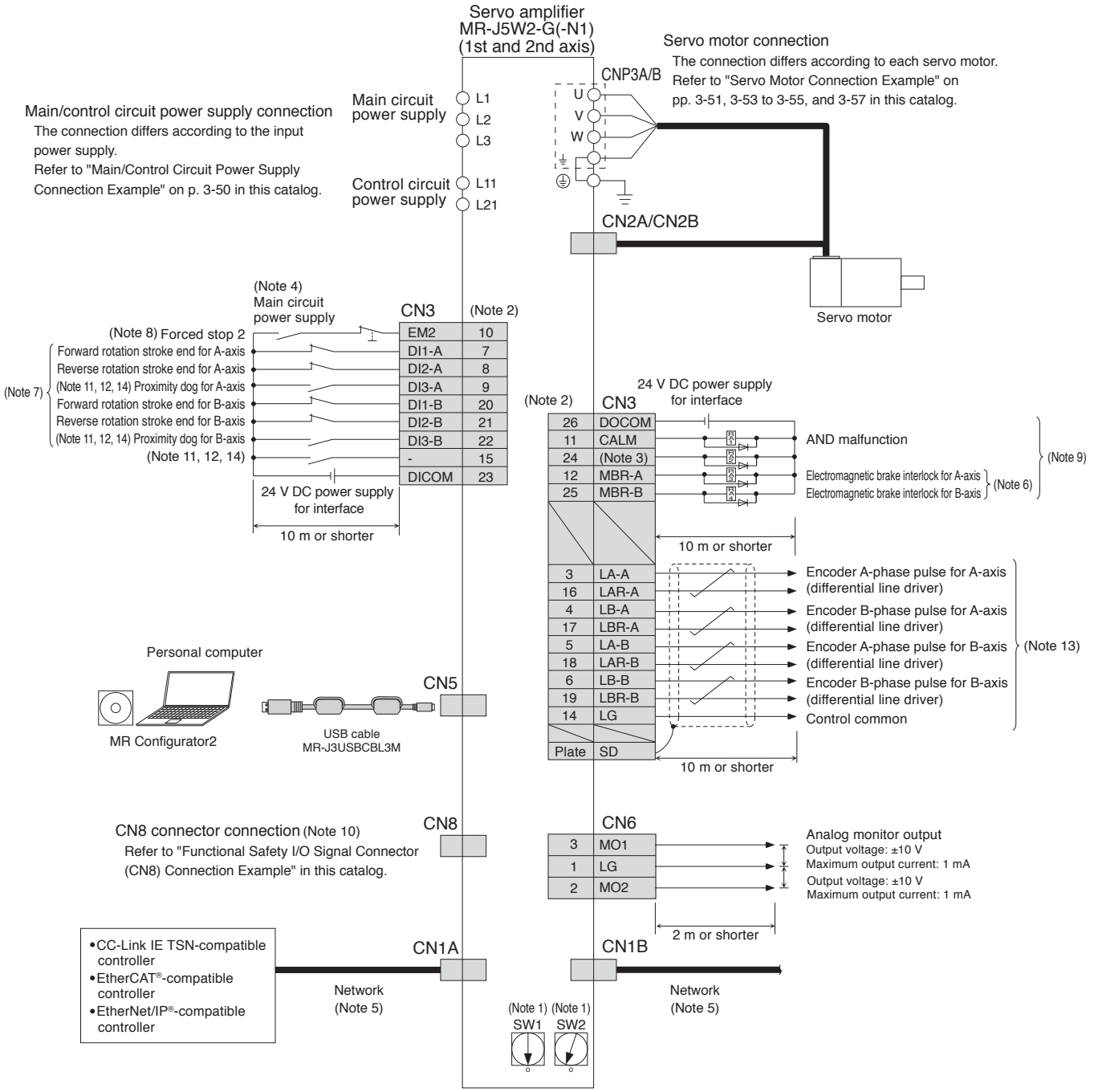

Notes:
1. The node address or the 4th octet of the IP address can be set to between 1 and 254 with a combination of the ID setting switches or the rotary switches (SW1 and SW2). Note that the number of the connectable device stations depends on the controller specifications.
2. This is for sink wiring. Source wiring is also possible.
3. CINP (AND in-position) is assigned to this pin as default. A device for this pin can be changed with [Pr. PD08].
4. To prevent an unexpected restart of the servo amplifier, create a circuit to turn off EM2 (Forced stop 2) when the main circuit power is turned off.
5. When branching off CC-Link IE TSN (synchronous communication function) with a switching hub, use a switching hub (class B) recommended by CC-Link Partner Association. When a switching hub (class A) is used, there are restrictions on the topologies to be used. Refer to the controller manual for details.
6. When using a linear servo motor or direct drive motor, use MBR (Electromagnetic brake interlock) for an external brake mechanism.
7. Devices for these pins can be changed with [Pr. PD03], [Pr. PD04], and [Pr. PD05].
8. The forced stop signal is issued for two axes of the servo amplifier. For overall system, apply the emergency stop on the controller side.
9. Devices for these pins can be changed with [Pr. PD07] and [Pr. PD09].
10. Attach a short-circuit connector supplied with the servo amplifier when the functional safety (STO function) is not used.
11. These devices can be changed to TPR1 (Touch probe 1), TPR2 (Touch probe 2), and TPR3 (Touch probe 3) with [Pr. PD05] and [Pr. PD51].
12. For the servo amplifier firmware version supporting the touch probe function, refer to "MR-J5 User's Manual".
13. For the restrictions on the communication cycle, refer to "Restrictions" in this catalog.
14. For the restrictions on the communication cycle of the touch probe function, refer to "Restrictions" in this catalog.

Be sure to read through User's Manual for the actual wiring and use. Use the equipment after you have a full knowledge of the equipment, safety information and instructions.

MR-J5W3-G(-N1) Standard Wiring Diagram Example

WG

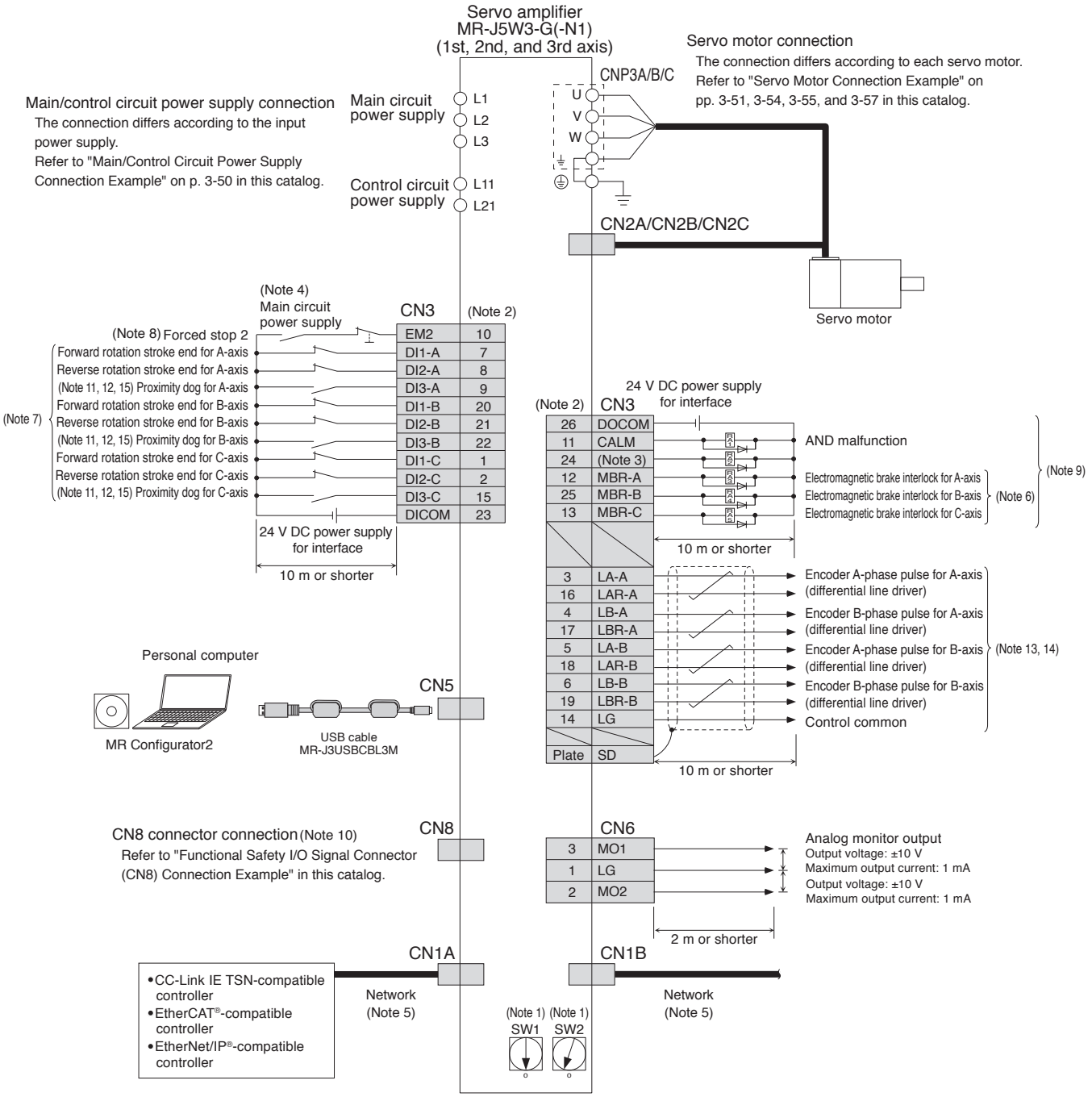

Notes:
1. The node address or the 4th octet of the IP address can be set to between 1 and 254 with a combination of the ID setting switches or the rotary switches (SW1 and SW2). Note that the number of the connectable device stations depends on the controller specifications.
2. This is for sink wiring. Source wiring is also possible.
3. CINP (AND in-position) is assigned to this pin as default. A device for this pin can be changed with [Pr. PD08].
4. To prevent an unexpected restart of the servo amplifier, create a circuit to turn off EM2 (Forced stop 2) when the main circuit power is turned off.
5. When branching off CC-Link IE TSN (synchronous communication function) with a switching hub, use a switching hub (class B) recommended by CC-Link Partner Association. When a switching hub (class A) is used, there are restrictions on the topologies to be used. Refer to the controller manual for details.
6. When using a linear servo motor or direct drive motor, use MBR (Electromagnetic brake interlock) for an external brake mechanism.
7. Devices for these pins can be changed with [Pr. PD03], [Pr. PD04], and [Pr. PD05].
8. The forced stop signal is issued for three axes of the servo amplifier. For overall system, apply the emergency stop on the controller side.
9. Devices for these pins can be changed with [Pr. PD07] and [Pr. PD09].
10. Attach a short-circuit connector supplied with the servo amplifier when the functional safety (STO function) is not used.
11. These devices can be changed to TPR1 (Touch probe 1), TPR2 (Touch probe 2), and TPR3 (Touch probe 3) with [Pr. PD05].
12. For the servo amplifier firmware version supporting the touch probe function, refer to "MR-J5 User's Manual".
13. For the availability of the encoder output pulse, refer to "MR-J5W3-G(-N1) (3-Axis, Network Compatible) Specifications" in this catalog.
14. For the restrictions on the communication cycle, refer to "Restrictions" in this catalog.
15. For the restrictions on the communication cycle of the touch probe function, refer to "Restrictions" in this catalog.

Be sure to read through User's Manual for the actual wiring and use. Use the equipment after you have a full knowledge of the equipment, safety information and instructions.

Main/Control Circuit Power Supply Connection Example (Note 6)

WG WB

●Driving on/off of main circuit power supply with AC power supply for 3-phase 200 V AC

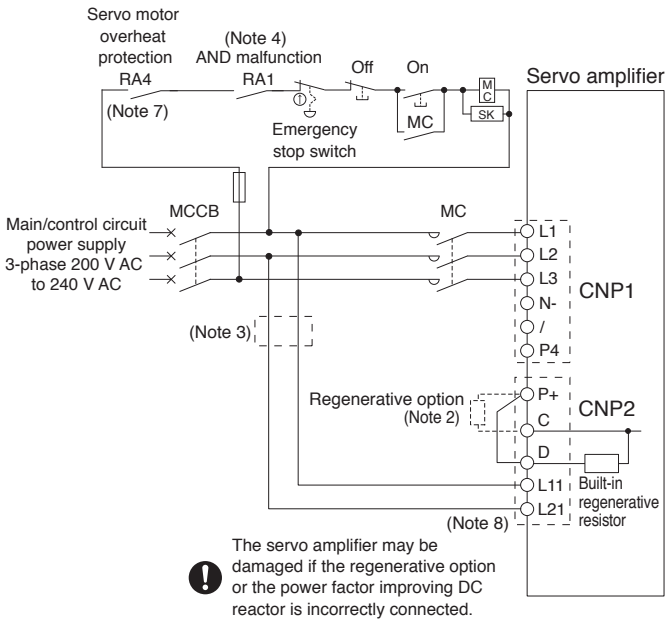

●Driving on/off of main circuit power supply with DC power supply for 3-phase 200 V AC

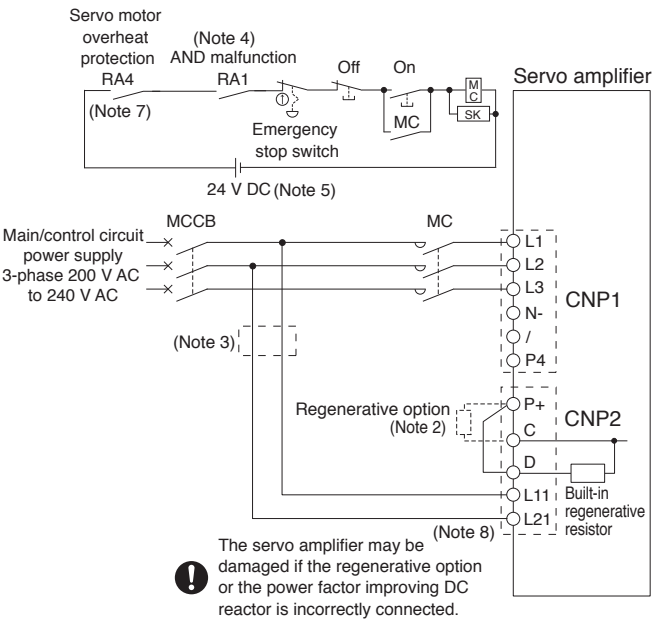

●Driving on/off of main circuit power supply with AC power supply for 1-phase 200 V AC

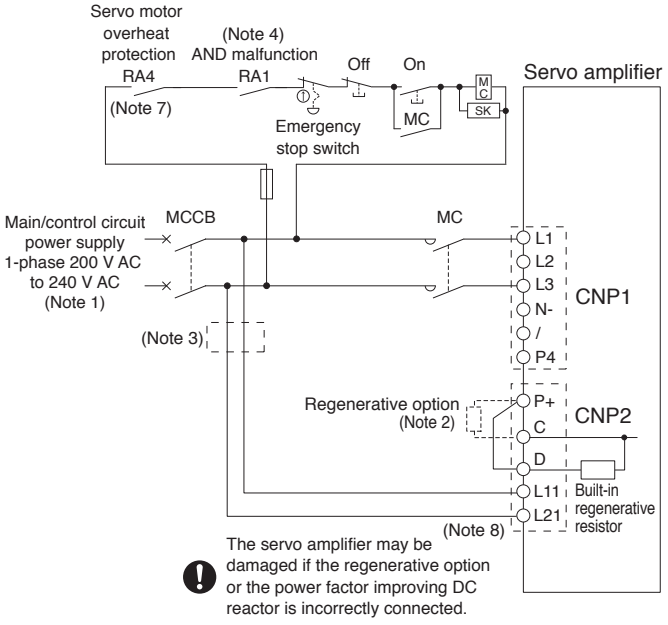

●Driving on/off of main circuit power supply with DC power supply for 1-phase 200 V AC

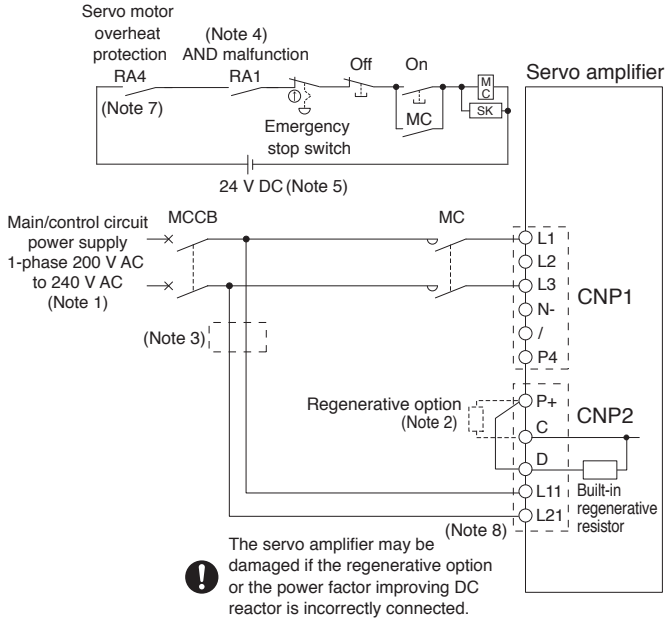

Notes:
1. For 1-phase 200 V AC to 240 V AC, connect the power supply to L1 and L3 terminals. Do not connect anything to L2.
2. Disconnect a short-circuit bar between P+ and D when connecting the regenerative option externally.
3. When wires used for L11 and L21 are thinner than those for L1, L2, and L3, use a molded-case circuit breaker. Refer to "MR-J5 User's Manual" for details.
4. Select either of the following functions for CALM (AND malfunction) with the controller.
   1) The contact opens when an alarm occurs on one of the axes.
   2) The contact opens when an alarm occurs on all axes.
5. Do not use the 24 V DC interface power supply for the magnetic contactor. Provide a dedicated power supply to the magnetic contactor.
6. For a connection example of power supply circuit with DC input, refer to "MR-J5 User's Manual".
7. When connecting a linear servo motor with a thermal protector, add a contact to shut off by being interlocked with the thermal protector output of the linear servo motor.
8. Do not ground the servo amplifier between L11 and L21 even when the control circuit power supply is separated from the main circuit power supply using an uninterruptible power supply (UPS) or an isolation transformer.

Be sure to read through User's Manual for the actual wiring and use. Use the equipment after you have a full knowledge of the equipment, safety information and instructions.

Servo Motor Connection Example (Rotary Servo Motor)

WG WB

Semi Closed Loop Control System with MR-J5W_-G(-N1)/MR-J5W_-B

●For HK-KT series/HK-MT series/HK-RT (1.0 kW to 2.0 kW) series

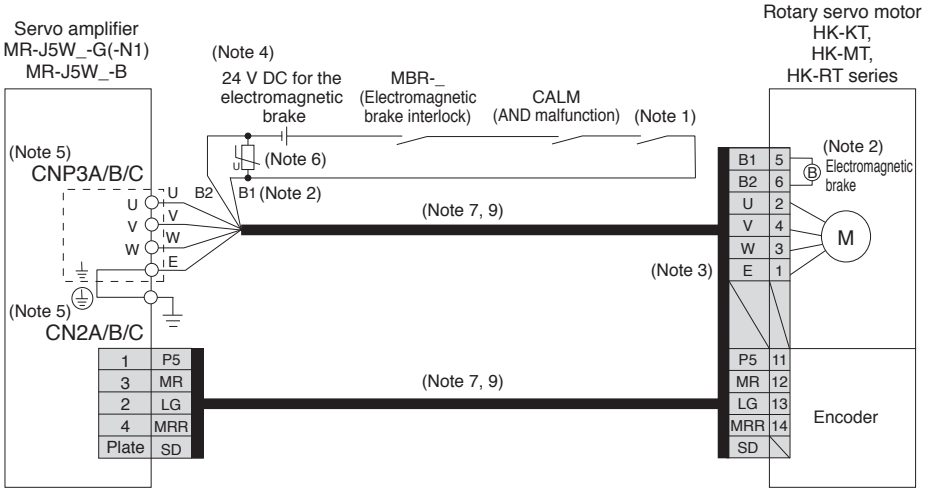

●For HK-ST series

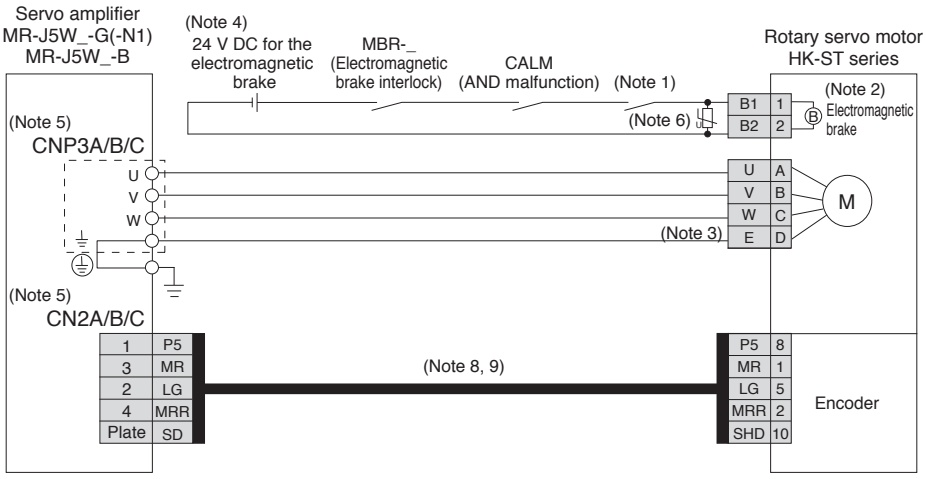

Notes: 1. Create the circuit in order to shut off by being interlocked with the emergency stop switch.
2. This is for the servo motors with an electromagnetic brake. The electromagnetic brake terminals do not have polarity.
3. Connect the grounding wire to the cabinet protective earth (PE) terminal via the servo amplifier for grounding the servo motor.
4. Do not use the 24 V DC interface power supply for the electromagnetic brake. Provide a dedicated power supply to the electromagnetic brake.
5. CNP3C and CN2C connectors are available for MR-J5W3-G(-N1)/MR-J5W3-B servo amplifiers.
6. Install a surge absorber between B1 and B2.
7. This is for using an option dual cable type. Single cable types are also available.
8. Encoder cables are available as an option.
9. Refer to "Rotary Servo Motor User's Manual (For MR-J5)" when fabricating the cables.

Be sure to read through User's Manual for the actual wiring and use. Use the equipment after you have a full knowledge of the equipment, safety information and instructions.

External Encoder Connection Specifications

WG WB

Refer to the following table for the encoder communication method compatible with each system and for the servo amplifier connector to which a load-side encoder should be connected.

System configuration	External encoder communication method	Connector	
		MR-J5W2-G(-N1)/MR-J5W2-B	MR-J5W3-G(-N1)/MR-J5W3-B
Linear servo system (Note 3)	Two-wire type	CN2A (Note 1) CN2B (Note 1)	CN2A (Note 1) CN2B (Note 1) CN2C (Note 1)
	Four-wire type		
Fully closed loop control system (Note 2, 5)	Two-wire type	CN2A (Note 4, 6) CN2B (Note 4, 6)	
Scale measurement function (Note 2, 5)	Two-wire type	CN2A (Note 4, 6) CN2B (Note 4, 6)	

Notes: 1. MR-J4THCBL03M junction cable is required.
2. For the servo amplifier firmware version supporting each function, refer to "MR-J5 User's Manual".
3. Refer to "Combinations of Linear Servo Motors and Servo Amplifiers" in this catalog for servo amplifiers that are compatible with linear servo motors.
4. MR-J4FCCBL03M junction cable is required.
5. For the restrictions on the communication cycle, refer to "Restrictions" in this catalog.
6. MR-J5W2-G(-N1)/MR-J5W2-B does not support a servo motor encoder with the four-wire type communication method. Use MR-J5-G(4)-HS(N1)/MR-J5-G(4)-RJ(N1)/MR-J5-B(4)-RJ.

Servo Motor Connection Example (Rotary Servo Motor)

WG WB

Fully Closed Loop Control System with MR-J5W2-G(-N1)/MR-J5W2-B

●For HK-KT series/HK-MT series/HK-RT (1.0 kW to 2.0 kW) series

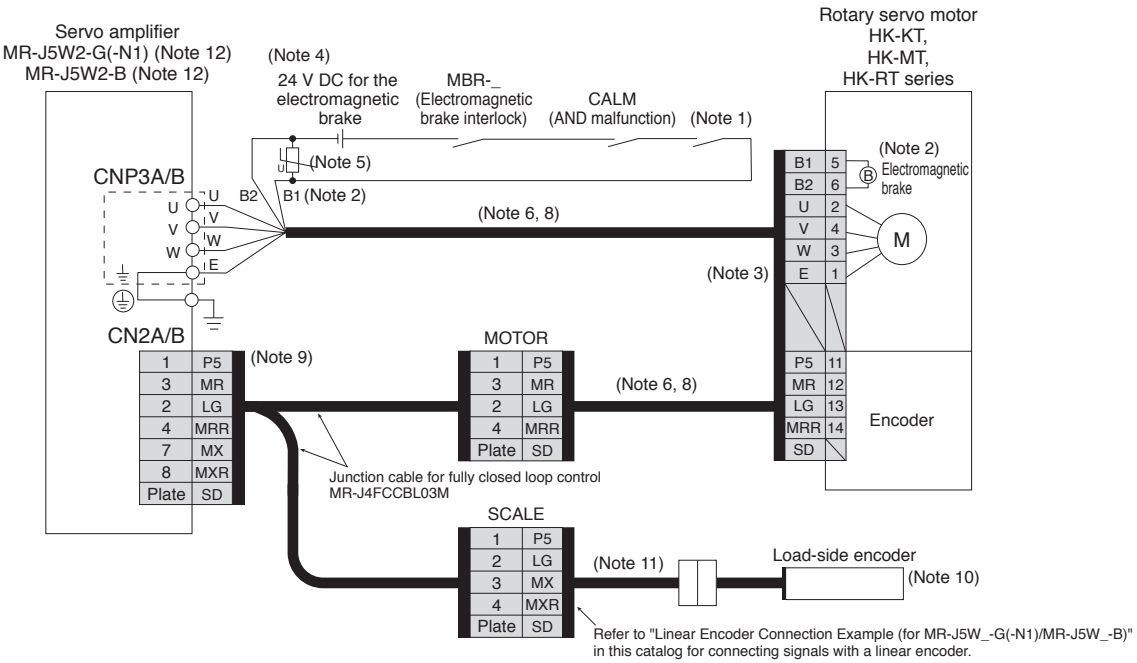

●For HK-ST series

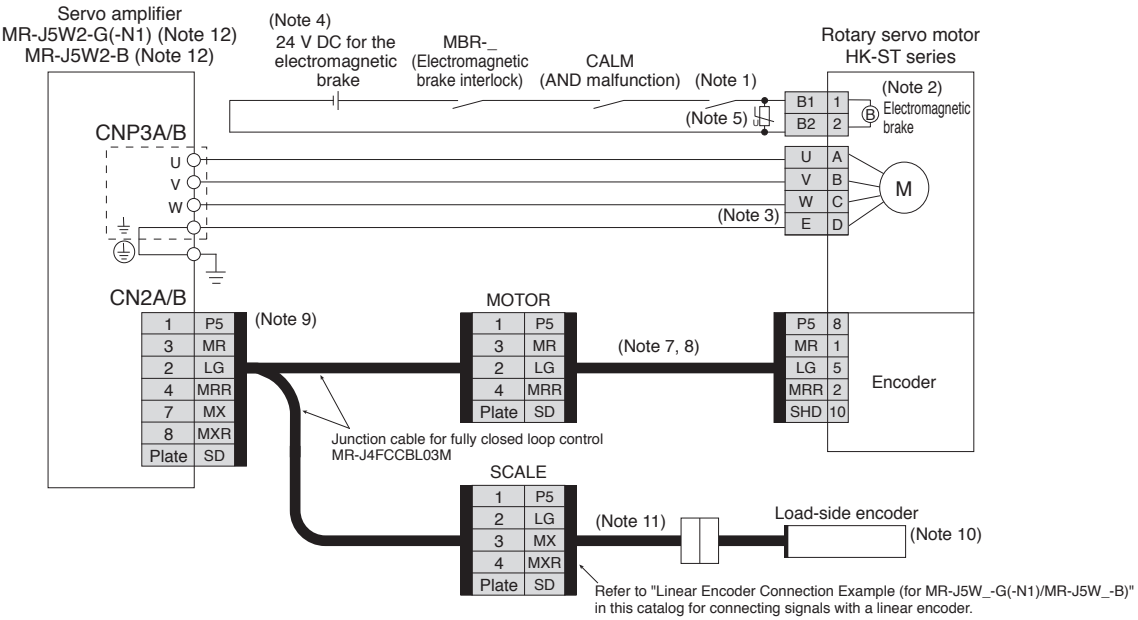

Notes:
1. Create the circuit in order to shut off by being interlocked with the emergency stop switch.
2. This is for the servo motors with an electromagnetic brake. The electromagnetic brake terminals do not have polarity.
3. Connect the grounding wire to the cabinet protective earth (PE) terminal via the servo amplifier for grounding the servo motor.
4. Do not use the 24 V DC interface power supply for the electromagnetic brake. Provide a dedicated power supply to the electromagnetic brake.
5. Install a surge absorber between B1 and B2.
6. This is for using an option dual cable type. Single cable types are also available.
7. Encoder cables are available as an option.
8. Refer to "Rotary Servo Motor User's Manual (For MR-J5)" when fabricating the cables.
9. For fully closed loop control, the load-side encoder and the servo motor encoder are compatible only with two-wire type communication method. Four-wire type cannot be used.
10. For linear encoders, refer to "List of Linear Encoders" in this catalog. Refer to "MR-J5 User's Manual" for the fully closed loop control with a rotary encoder.
11. Necessary encoder cables vary depending on the load-side encoder. Refer to "MR-J5 User's Manual" and "Rotary Servo Motor User's Manual (For MR-J5)".
12. MR-J5W3-G(-N1)/MR-J5W3-B does not support the fully closed loop control.

Be sure to read through User's Manual for the actual wiring and use. Use the equipment after you have a full knowledge of the equipment, safety information and instructions.

Servo Motor Connection Example (Linear Servo Motor)

WG WB

Linear Servo System with MR-J5W_-G(-N1)/MR-J5W_-B

●For LM-H3 series/LM-K2 series/LM-U2 series

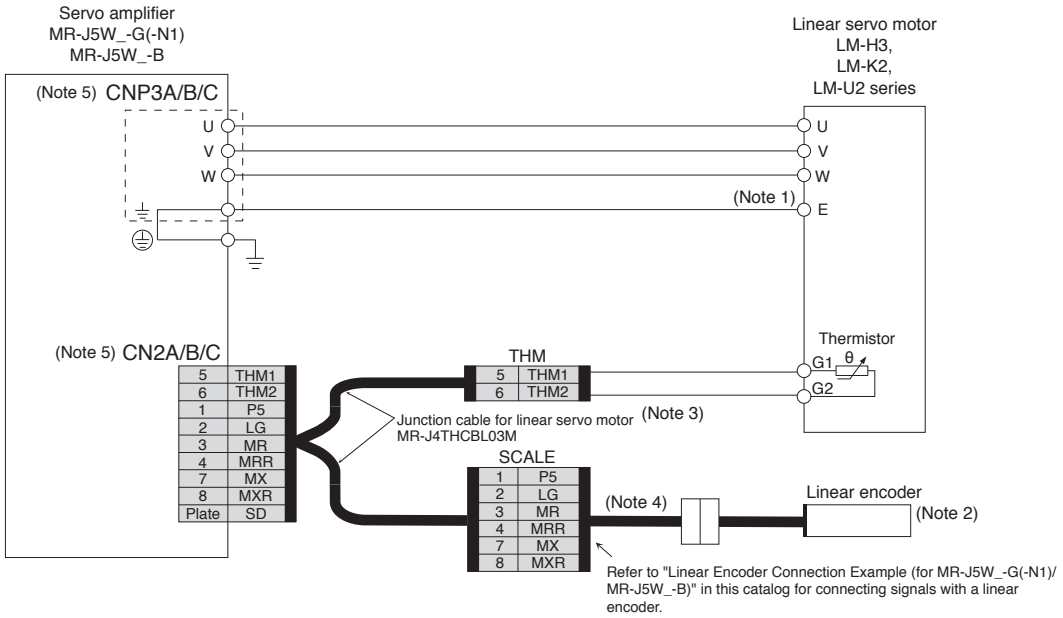

Notes: 1. Connect the grounding wire to the cabinet protective earth (PE) terminal via the servo amplifier for grounding the servo motor.
2. For linear encoders, refer to "List of Linear Encoders" in this catalog.
3. MR-J4THCBL03M junction cable for linear servo motor is compatible with both two-wire and four-wire type linear encoders.
4. Necessary cables vary depending on the linear encoder. Refer to "MR-J5 Partner's Encoder User's Manual" for details.
5. CNP3C and CN2C connectors are available for MR-J5W3-G(-N1)/MR-J5W3-B servo amplifiers.

Be sure to read through User's Manual for the actual wiring and use. Use the equipment after you have a full knowledge of the equipment, safety information and instructions.

Servo Motor Connection Example (Linear Servo Motor)

Linear Servo System with MR-J5W_-G(-N1)

●For LM-AJ series

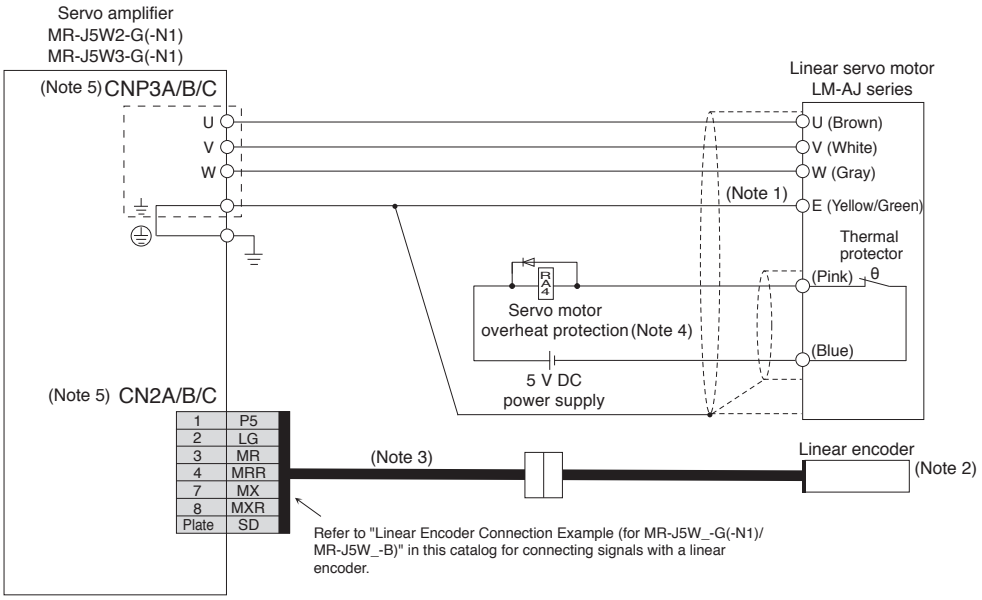

●For LM-AU series

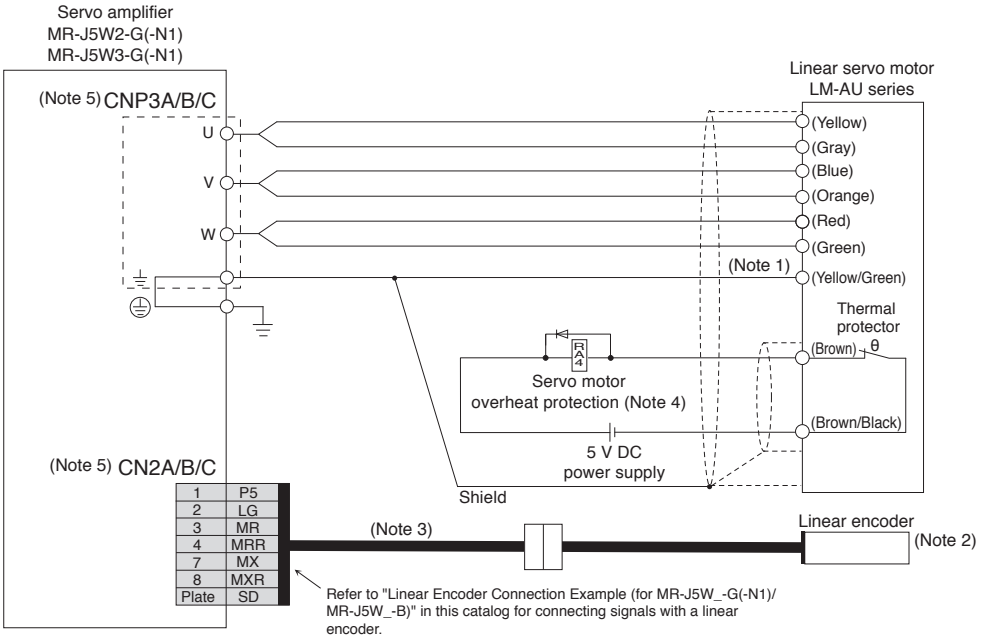

Notes: 1. Connect the grounding wire to the cabinet protective earth (PE) terminal via the servo amplifier for grounding the servo motor.
2. For linear encoders, refer to "List of Linear Encoders" in this catalog.
3. Necessary cables vary depending on the linear encoder. Refer to "MR-J5 Partner's Encoder User's Manual" for details.
4. Create a relay circuit to turn off the main circuit power supply when the thermal protector is opened by overheating. Use a relay designed for a flowing current of 1000 mA or less. If a mechanical relay is used, use a relay designed for a flowing current of 50 mA to 1000 mA.
5. CNP3C and CN2C connectors are available for MR-J5W3-G(-N1)/MR-J5W3-B servo amplifiers.

Be sure to read through User's Manual for the actual wiring and use. Use the equipment after you have a full knowledge of the equipment, safety information and instructions.

Linear Encoder Connection Example (for MR-J5W_-G(-N1)/MR-J5W_-B)

WG WB

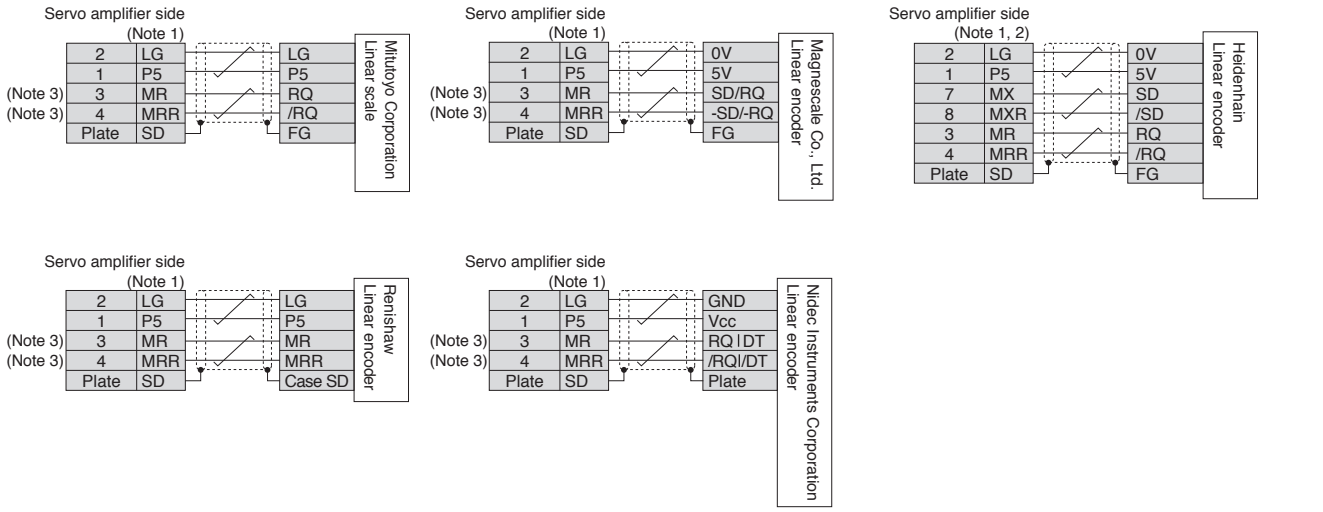

Notes: 1. For the number of the wire pairs for LG and P5, refer to "MR-J5 Partner's Encoder User's Manual".
2. For fully closed loop control, the load-side encoder and the servo motor encoder are compatible only with two-wire type communication method. Four-wire type cannot be used.
3. For the fully closed loop control, MR and MRR of the servo amplifier-side connectors will be connected to MX and MXR of the SCALE connectors of MR-J4FCCBL03M.

Be sure to read through User's Manual for the actual wiring and use. Use the equipment after you have a full knowledge of the equipment, safety information and instructions.

Servo Motor Connection Example (Direct Drive Motor)

WG WB

●For TM-RG2M series/TM-RU2M series/TM-RFM series (incremental system)

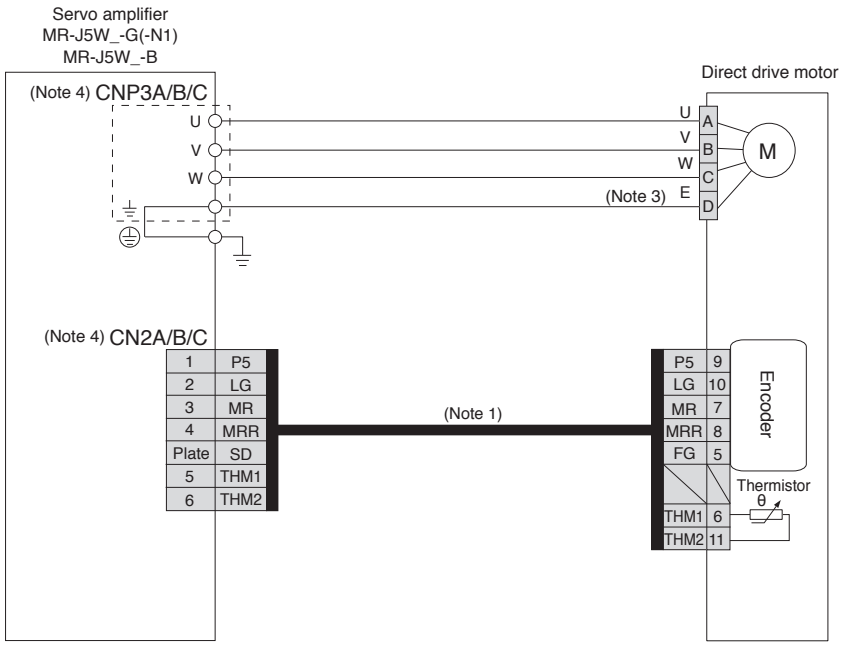

●For TM-RG2M series/TM-RU2M series/TM-RFM series (absolute position detection system)

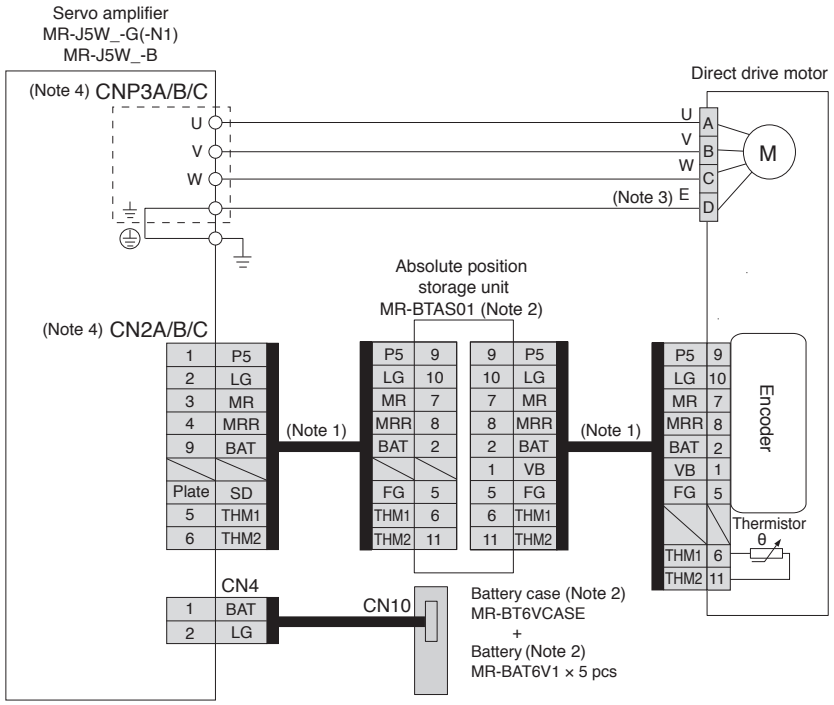

Notes: 1. Fabricate this encoder cable. Refer to "Direct Drive Motor User's Manual" when fabricating the encoder cable.
2. An MR-BTAS01 absolute position storage unit, MR-BT6VCASE battery case, and MR-BAT6V1 batteries (sold as options) are required for absolute position detection system. Refer to "MR-J5 User's Manual" and "Direct Drive Motor User's Manual" for details of absolute position detection system.
3. Connect the grounding wire to the cabinet protective earth (PE) terminal via the servo amplifier for grounding the servo motor.
4. CNP3C and CN2C connectors are available for MR-J5W3-G(-N1)/MR-J5W3-B servo amplifiers.

Be sure to read through User's Manual for the actual wiring and use. Use the equipment after you have a full knowledge of the equipment, safety information and instructions.

MR-J5W2-G(-N1) Dimensions

WG

●MR-J5W2-22G(-N1)

●MR-J5W2-44G(-N1)

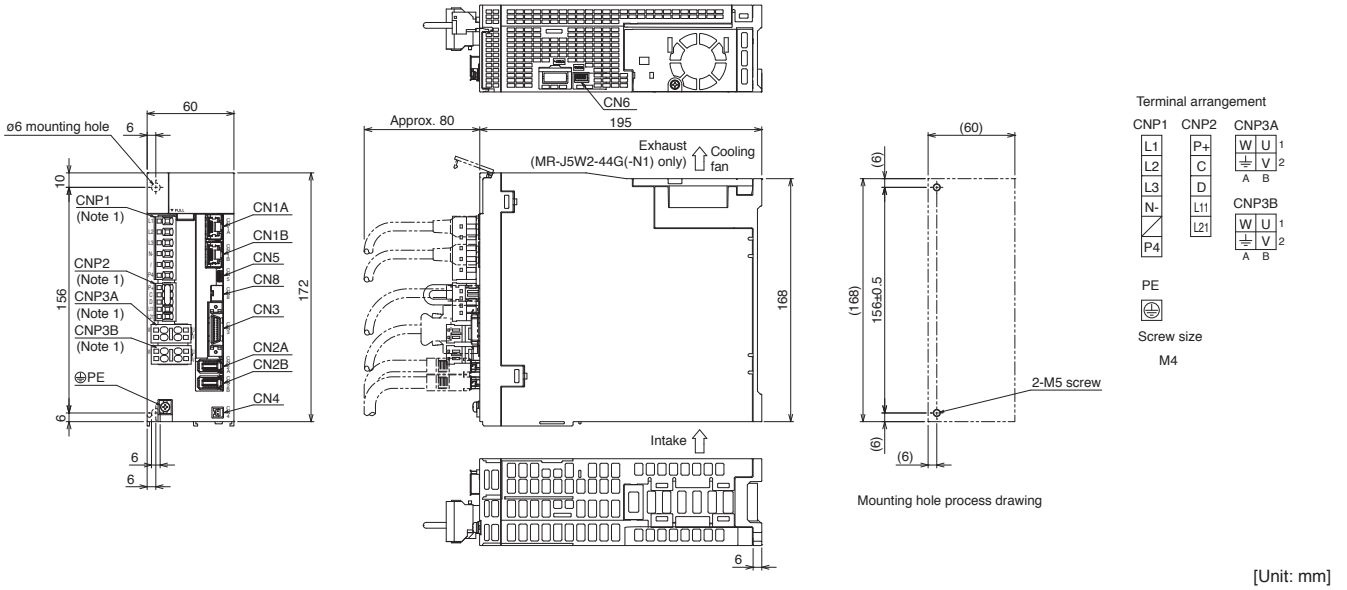

[Unit: mm]

●MR-J5W2-77G(-N1)

●MR-J5W2-1010G(-N1)

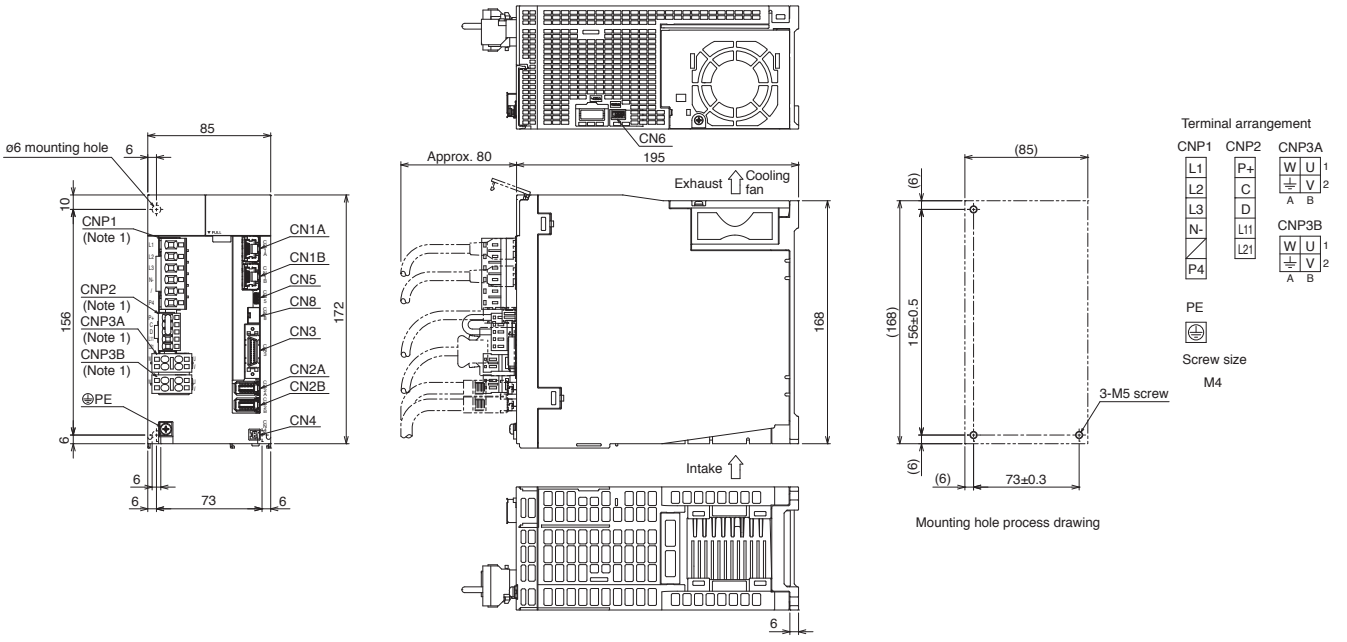

[Unit: mm]

Notes: 1. CNP1, CNP2, CNP3A, and CNP3B connectors are supplied with the servo amplifier.

MR-J5W3-G(-N1) Dimensions

WG

●MR-J5W3-222G(-N1)

●MR-J5W3-444G(-N1)

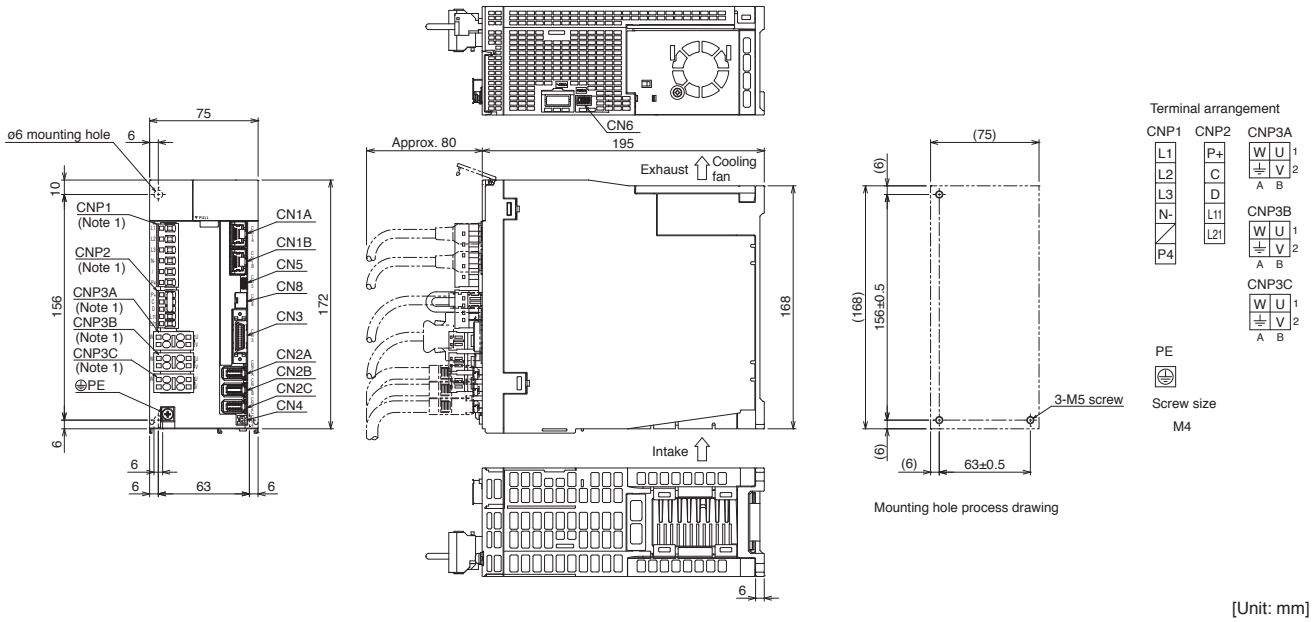

[Unit: mm]

Notes: 1. CNP1, CNP2, CNP3A, CNP3B, and CNP3C connectors are supplied with the servo amplifier.

MR-J5D_-G4(-N1) Connections with Peripheral Equipment (Note 1)

DG

Peripheral equipment is connected to MR-J5D_-G4(-N1) as described below. Connectors, cables, options, and other necessary equipment are available so that users can set up the drive unit easily and start using it right away.

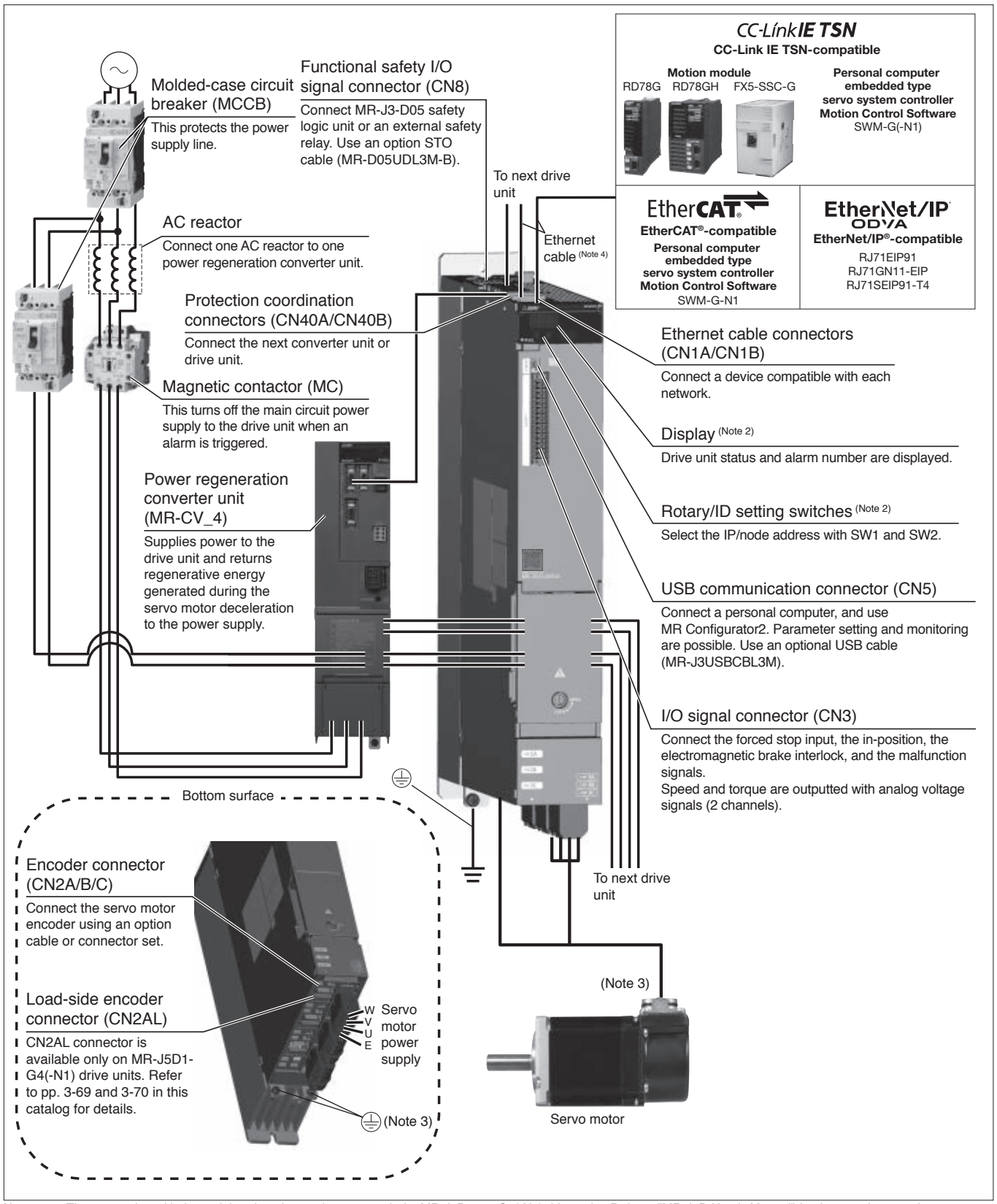

Notes: 1. The connection with the peripheral equipment is an example for MR-J5D3-200G4(-N1) drive units. Refer to "MR-J5D User's Manual" for the actual connections.
2. This illustration shows the display cover closed.
3. Connect the grounding wire to the cabinet protective earth (PE) terminal via the drive unit for grounding the servo motor.
4. For specifications of the Ethernet cable, refer to "Ethernet Cable Specifications" in this catalog.

MR-J5D1-G4(-N1) (1-Axis, Network Compatible) Specifications (400 V)

DG

Drive unit model MR-J5D1-_(-N1)			100G4	200G4	350G4	500G4	700G4
Compatible converter unit model			MR-CV_4 (Note 8)				
Output	Voltage		3-phase 0 V AC to 480 V AC				
	Rated current	[A]	3.0	5.5	8.6	14.0	17.0
Main circuit power supply input			Main circuit power is supplied from the power regeneration converter unit to the drive unit.				
Control circuit power supply input	Voltage/ frequency	AC input	1-phase 380 V AC to 480 V AC, 50 Hz/60 Hz				
	Rated current	[A]	0.2				
	Permissible voltage fluctuation	AC input	1-phase 323 V AC to 528 V AC				
	Permissible frequency fluctuation		±5 % maximum				
	Power consumption	[W]	40				
Interface power supply			24 V DC ± 10 % (required current capacity: 0.3 A (including CN8 connector signals))				
Control method			Sine-wave PWM control/current control method				
Dynamic brake (Note 2)			Built-in				
CC-Link IE TSN Class B (Note 5) (MR-J5D1-G4)	Communication cycle (Note 3, 4)		31.25 µs, 62.5 µs, 125 µs, 250 µs, 500 µs, 1 ms, 1.5 ms, 2 ms, 2.5 ms, 3 ms, 3.5 ms, 4 ms, 4.5 ms, 5 ms, 5.5 ms, 6 ms, 6.5 ms, 7 ms, 7.5 ms, 8 ms				
	Protocol version		1.0/2.0 (Note 6)				
CC-Link IE TSN Class A (Note 5, 6, 7) (MR-J5D1-G4)	Communication cycle (Note 3)		500 µs to 500 ms				
	Protocol version		2.0				
EtherCAT® (MR-J5D1-G4-N1)	Communication cycle (Note 3, 4)		125 µs, 250 µs, 500 µs, 1 ms, 2 ms, 4 ms, 8 ms				
EtherNet/IP® (Note 7) (MR-J5D1-G4-N1)	Cycle time		Select from 1 ms to 100 ms				
CC-Link IE Field Network Basic (Note 7) (MR-J5D1-G4)			Supported				
Communication function	USB		Connect a personal computer (MR Configurator2 compatible)				
Encoder output pulse			Compatible (A/B/Z-phase pulse)				
Analog monitor			2 channels				
Positioning mode (Note 4)			Point table method				
Fully closed loop control (Note 4)			Supported				
Scale measurement function (Note 4)			Supported				
Load-side encoder interface			Mitsubishi Electric high-speed serial communication, A/B/Z-phase differential input signal				
Servo functions			Advanced vibration suppression control II, adaptive filter II, robust filter, quick tuning, auto tuning, one-touch tuning, tough drive function, drive recorder function, machine diagnosis function (including failure prediction), power monitoring function, lost motion compensation function, super trace control, continuous operation to torque control mode (Note 4, 9), driver communication function (Note 4, 6, 9)				
Protective functions			Overcurrent shut-off, overload shut-off (electronic thermal), servo motor overheat protection, encoder error protection, undervoltage protection, instantaneous power failure protection, overspeed protection, error excessive protection, magnetic pole detection protection, linear servo control fault protection				
Safety sub-function, Safety performance			Refer to "Safety Sub-Functions" in section 1 of this catalog.				
Structure (IP rating)			Natural cooling, open (IP20) (Note 1)			Force cooling, open (IP20) (Note 1)	
Mass		[kg]	5.5			4.6	

Notes: 1. IP20 requires a side protection cover (an option).
2. When using the dynamic brake, refer to "MR-J5D User's Manual" for the permissible load to motor inertia ratio.
3. The communication cycle depends on the controller specifications and the number of device stations connected.
4. For the restrictions on the communication cycle, refer to "Restrictions" in this catalog.
5. A communication speed of 1 Gbps/100 Mbps can be selected. When 100 Mbps is selected, the minimum communication cycle is 500 µs.
6. For the servo amplifier firmware version supporting each function, refer to "MR-J5D User's Manual".
7. For the restrictions on the network, refer to "MR-J5D User's Manual".
8. MR-CV_4 power regeneration converter units require a mounting attachment. Some drive units also require a mounting attachment depending on the power regeneration converter unit to be used. Refer to "Mounting Attachment" in this catalog for details.
9. The function is not available with MR-J5D_-G4-N1.

MR-J5D2-G4(-N1) (2-Axis, Network Compatible) Specifications (400 V)

DG

Drive unit model MR-J5D2-_(-N1)			100G4	200G4	350G4	500G4	700G4
Compatible converter unit model			MR-CV_4 (Note 2)				
Output	Voltage		3-phase 0 V AC to 480 V AC				
	Rated current (each axis)	[A]	3.0	5.5	8.6	14.0	17.0
Main circuit power supply input			Main circuit power is supplied from the power regeneration converter unit to the drive unit.				
Control circuit power supply input	Voltage/ frequency	AC input	1-phase 380 V AC to 480 V AC, 50 Hz/60 Hz				
	Rated current	[A]	0.2				
	Permissible voltage fluctuation	AC input	1-phase 323 V AC to 528 V AC				
	Permissible frequency fluctuation		±5 % maximum				
	Power consumption	[W]	40				
Interface power supply			24 V DC ± 10 % (required current capacity: 0.35 A (including CN8 connector signals))				
Control method			Sine-wave PWM control/current control method				
Dynamic brake (Note 4)			Built-in				
CC-Link IE TSN Class B (Note 7) (MR-J5D2-G4)	Communication cycle (Note 5, 6)		62.5 µs, 125 µs, 250 µs, 500 µs, 1 ms, 1.5 ms, 2 ms, 2.5 ms, 3 ms, 3.5 ms, 4 ms, 4.5 ms, 5 ms, 5.5 ms, 6 ms, 6.5 ms, 7 ms, 7.5 ms, 8 ms				
	Protocol version		1.0/2.0 (Note 9)				
CC-Link IE TSN Class A (Note 7, 9, 10) (MR-J5D2-G4)	Communication cycle (Note 5)		500 µs to 500 ms				
	Protocol version		2.0				
EtherCAT® (MR-J5D2-G4-N1)	Communication cycle (Note 5, 6)		250 µs, 500 µs, 1 ms, 2 ms, 4 ms, 8 ms				
EtherNet/IP® (Note 10) (MR-J5D2-G4-N1)	Cycle time		Select from 1 ms to 100 ms				
CC-Link IE Field Network Basic			Not supported				
Communication function	USB		Connect a personal computer (MR Configurator2 compatible)				
Encoder output pulse			Compatible (A/B-phase pulse) (Note 6, 8)				
Analog monitor			2 channels				
Positioning mode (Note 6)			Point table method				
Fully closed loop control (Note 6)			Supported				
Scale measurement function (Note 6)			Supported				
Load-side encoder interface (Note 3)			Mitsubishi Electric high-speed serial communication				
Servo functions			Advanced vibration suppression control II, adaptive filter II, robust filter, quick tuning, auto tuning, one-touch tuning, tough drive function, drive recorder function, machine diagnosis function (including failure prediction), power monitoring function, lost motion compensation function, super trace control, continuous operation to torque control mode (Note 6, 11)				
Protective functions			Overcurrent shut-off, overload shut-off (electronic thermal), servo motor overheat protection, encoder error protection, undervoltage protection, instantaneous power failure protection, overspeed protection, error excessive protection, magnetic pole detection protection, linear servo control fault protection				
Safety sub-function, Safety performance			Refer to "Safety Sub-Functions" in section 1 of this catalog.				
Structure (IP rating)			Natural cooling, open (IP20) (Note 1)	Force cooling, open (IP20) (Note 1)			
Mass		[kg]	5.7	5.6		6.2	

Notes:
1. IP20 requires a side protection cover (an option).
2. MR-CV_4 power regeneration converter units require a mounting attachment. Some drive units also require a mounting attachment depending on the power regeneration converter unit to be used. Refer to "Mounting Attachment" in this catalog for details.
3. Not compatible with pulse train interface (A/B/Z-phase differential output type).
4. When using the dynamic brake, refer to "MR-J5D User's Manual" for the permissible load to motor inertia ratio.
5. The communication cycle depends on the controller specifications and the number of device stations connected.
6. For the restrictions on the communication cycle, refer to "Restrictions" in this catalog.
7. A communication speed of 1 Gbps/100 Mbps can be selected. When 100 Mbps is selected, the minimum communication cycle is 500 µs.
8. When the safety sub-function (network connection) is enabled, encoder output pulses are not outputted.
9. For the servo amplifier firmware version supporting each function, refer to "MR-J5D User's Manual".
10. For the restrictions on the network, refer to "MR-J5D User's Manual".
11. The function is not available with MR-J5D_-G4-N1.

MR-J5D3-G4(-N1) (3-Axis, Network Compatible) Specifications (400 V)

DG

Drive unit model MR-J5D3-_(-N1)				100G4	200G4
Compatible converter unit model				MR-CV_4 (Note 3)	
Output	Voltage			3-phase 0 V AC to 480 V AC	
	Rated current (each axis)		[A]	3.0	5.5
Main circuit power supply input				Main circuit power is supplied from the power regeneration converter unit to the drive unit.	
Control circuit power supply input	Voltage/ frequency	AC input		1-phase 380 V AC to 480 V AC, 50 Hz/60 Hz	
	Rated current		[A]	0.2	
	Permissible voltage fluctuation	AC input		1-phase 323 V AC to 528 V AC	
	Permissible frequency fluctuation			±5 % maximum	
	Power consumption		[W]	40	
Interface power supply				24 V DC ± 10 % (required current capacity: 0.45 A (including CN8 connector signals))	
Control method				Sine-wave PWM control/current control method	
Dynamic brake (Note 4)				Built-in	
CC-Link IE TSN Class B (Note 2) (MR-J5D3-G4)	Communication cycle (Note 5, 6)			250 µs, 500 µs, 1 ms, 1.5 ms, 2 ms, 2.5 ms, 3 ms, 3.5 ms, 4 ms, 4.5 ms, 5 ms, 5.5 ms, 6 ms, 6.5 ms, 7 ms, 7.5 ms, 8 ms	
	Protocol version			1.0/2.0 (Note 8)	
CC-Link IE TSN Class A (Note 2, 8, 9) (MR-J5D3-G4)	Communication cycle (Note 5)			500 µs to 500 ms	
	Protocol version			2.0	
EtherCAT® (MR-J5D3-G4-N1)	Communication cycle (Note 5, 6)			250 µs, 500 µs, 1 ms, 2 ms, 4 ms, 8 ms	
EtherNet/IP® (Note 9) (MR-J5D3-G4-N1)	Cycle time			Select from 1 ms to 100 ms	
CC-Link IE Field Network Basic				Not supported	
Communication function	USB			Connect a personal computer (MR Configurator2 compatible)	
Encoder output pulse	MR-J5D3-G4			Compatible only with A-axis and B-axis (A/B-phase pulse) (Note 6, 7)	
	MR-J5D3-G4-N1			Not compatible	
Analog monitor				2 channels	
Positioning mode (Note 6)				Point table method	
Fully closed loop control				Not supported	
Scale measurement function				Not supported	
Servo functions				Advanced vibration suppression control II, adaptive filter II, robust filter, quick tuning, auto tuning, one-touch tuning, tough drive function, drive recorder function, machine diagnosis function (including failure prediction), power monitoring function, lost motion compensation function, super trace control, continuous operation to torque control mode (Note 6, 10)	
Protective functions				Overcurrent shut-off, overload shut-off (electronic thermal), servo motor overheat protection, encoder error protection, undervoltage protection, instantaneous power failure protection, overspeed protection, error excessive protection, magnetic pole detection protection, linear servo control fault protection	
Safety sub-function, Safety performance				Refer to "Safety Sub-Functions" in section 1 of this catalog.	
Structure (IP rating)				Natural cooling, open (IP20) (Note 1)	Force cooling, open (IP20) (Note 1)
Mass			[kg]	5.9	5.8

Notes:
1. IP20 requires a side protection cover (an option).
2. A communication speed of 1 Gbps/100 Mbps can be selected. When 100 Mbps is selected, the minimum communication cycle is 500 µs.
3. MR-CV_4 power regeneration converter units require a mounting attachment. Some drive units also require a mounting attachment depending on the power regeneration converter unit to be used. Refer to "Mounting Attachment" in this catalog for details.
4. When using the dynamic brake, refer to "MR-J5D User's Manual" for the permissible load to motor inertia ratio.
5. The communication cycle depends on the controller specifications and the number of device stations connected.
6. For the restrictions on the communication cycle, refer to "Restrictions" in this catalog.
7. When the command unit selection function (command unit/s), the safety sub-function (network connection), or the touch probe function is enabled, encoder output pulses are not outputted.
8. For the servo amplifier firmware version supporting each function, refer to "MR-J5D User's Manual".
9. For the restrictions on the network, refer to "MR-J5D User's Manual".
10. The function is not available with MR-J5D_-G4-N1.

MR-J5D1-G4(-N1) Standard Wiring Diagram Example

DG

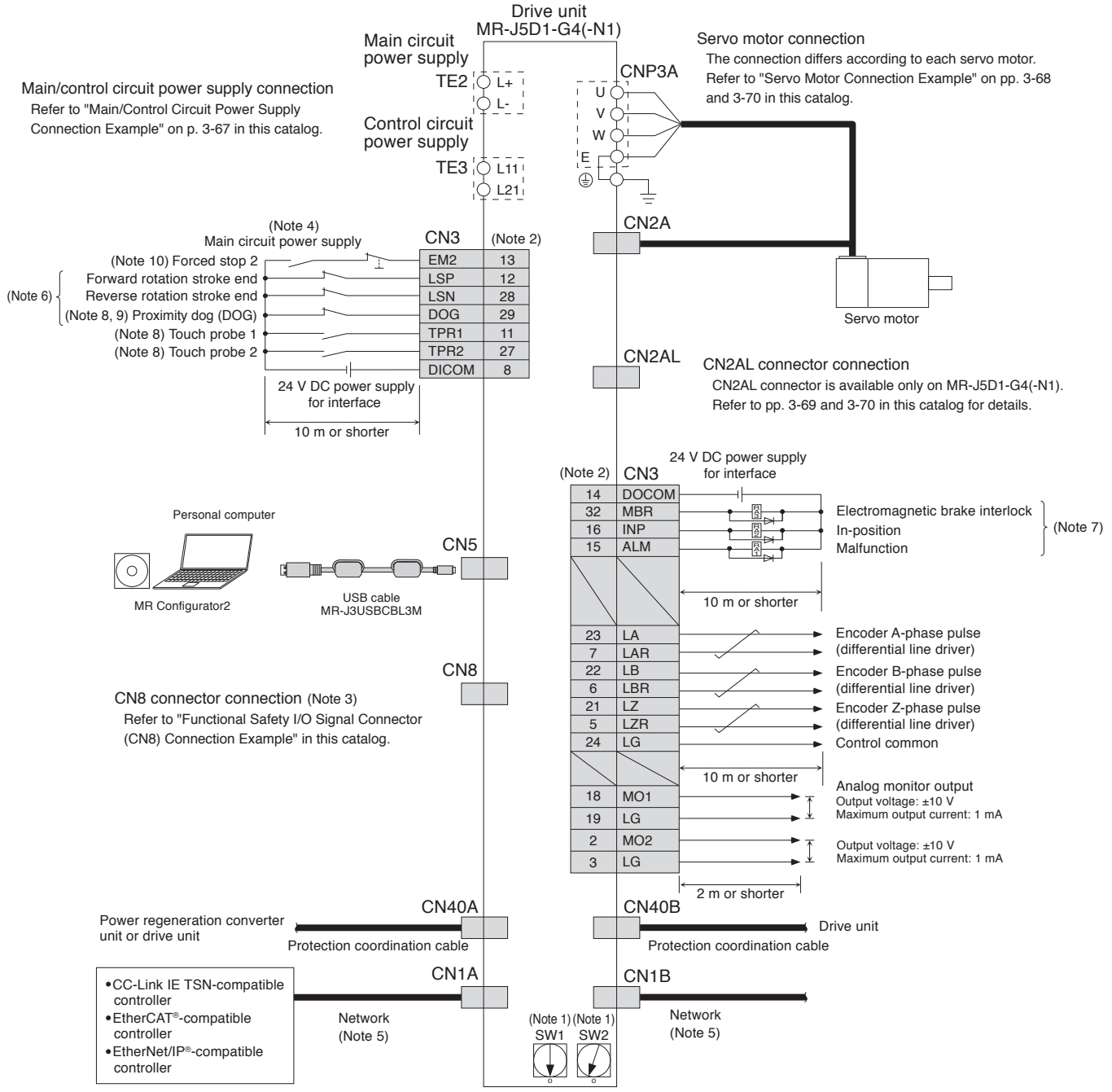

Notes:
1. The node address or the 4th octet of the IP address can be set to between 1 and 254 with a combination of the ID setting switches or the rotary switches (SW1 and SW2). Note that the number of the connectable device stations depends on the controller specifications.
2. This is for sink wiring. Source wiring is also possible.
3. Attach a short-circuit connector supplied with the drive unit when the functional safety (STO function) is not used.
4. To prevent an unexpected restart of the drive unit, create a circuit to turn off EM2 (Forced stop 2) when the main circuit power is turned off.
5. When branching off CC-Link IE TSN (synchronous communication function) with a switching hub, use a switching hub (class B) recommended by CC-Link Partner Association. When a switching hub (class A) is used, there are restrictions on the topologies to be used. Refer to the controller manual for details.
6. Devices for these pins can be changed with [Pr. PD03], [Pr. PD04], and [Pr. PD05].
7. Devices for these pins can be changed with [Pr. PD07], [Pr. PD08], and [Pr. PD09].
8. For the restrictions on the communication cycle of the touch probe function, refer to "Restrictions" in this catalog.
9. This device can be changed to TPR3 (Touch probe 3) with [Pr. PD05]. When TPR3 is set, connect by using a normally open contact switch as the same as TPR1 (Touch probe 1) and TPR2 (Touch probe 2).
10. The forced stop signal is issued for the drive unit. For overall system, apply the emergency stop on the controller side.

Be sure to read through User's Manual for the actual wiring and use. Use the equipment after you have a full knowledge of the equipment, safety information and instructions.

MR-J5D2-G4(-N1) Standard Wiring Diagram Example

DG

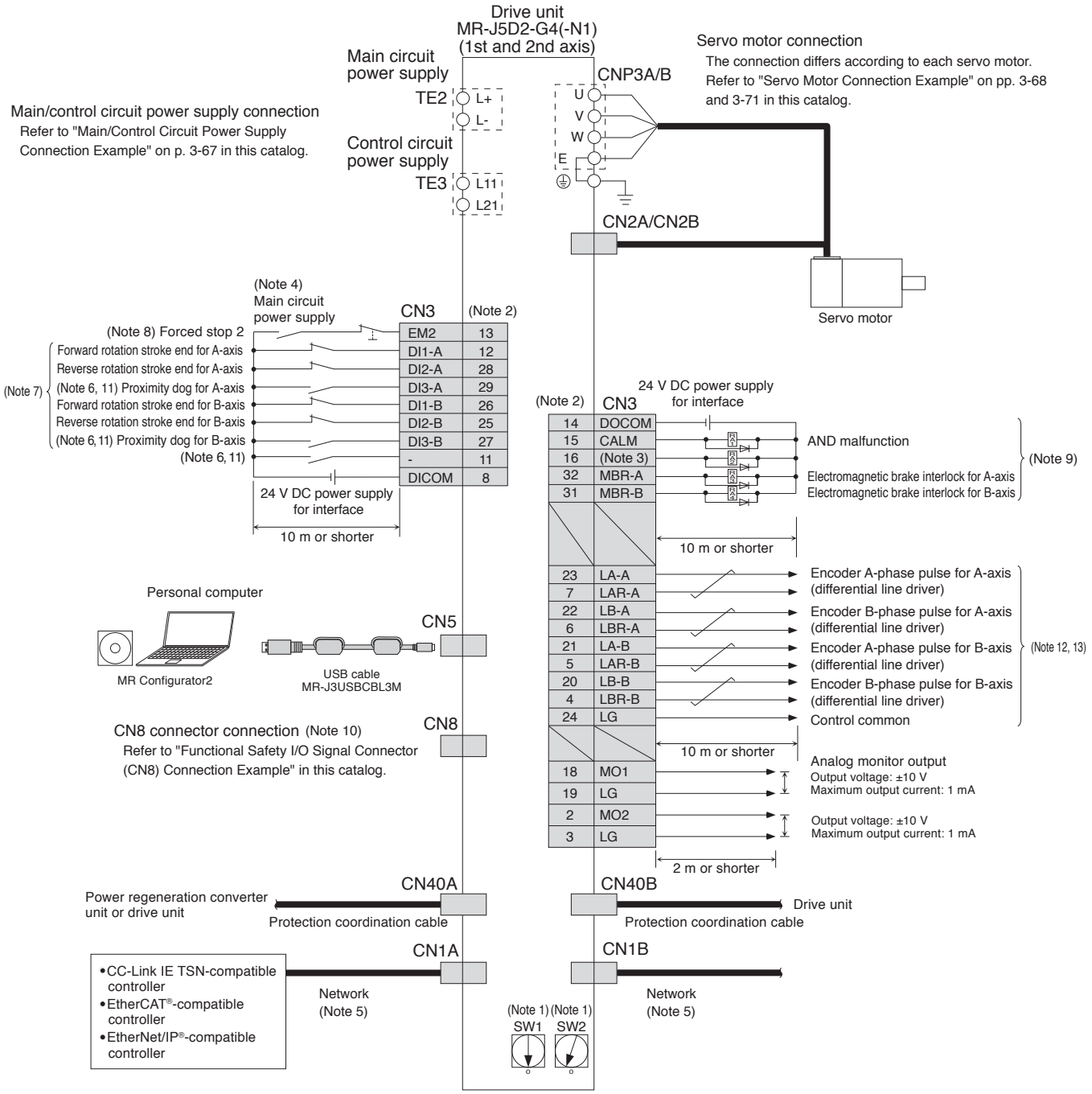

Notes:
1. The node address or the 4th octet of the IP address can be set to between 1 and 254 with a combination of the ID setting switches or the rotary switches (SW1 and SW2). Note that the number of the connectable device stations depends on the controller specifications.
2. This is for sink wiring. Source wiring is also possible.
3. CINP (AND in-position) is assigned to this pin as default. A device for this pin can be changed with [Pr. PD08].
4. To prevent an unexpected restart of the drive unit, create a circuit to turn off EM2 (Forced stop 2) when the main circuit power is turned off.
5. When branching off CC-Link IE TSN (synchronous communication function) with a switching hub, use a switching hub (class B) recommended by CC-Link Partner Association. When a switching hub (class A) is used, there are restrictions on the topologies to be used. Refer to the controller manual for details.
6. For the restrictions on the communication cycle of the touch probe function, refer to "Restrictions" in this catalog.
7. Devices for these pins can be changed with [Pr. PD03], [Pr. PD04], and [Pr. PD05].
8. The forced stop signal is issued for two axes of the drive unit. For overall system, apply the emergency stop on the controller side.
9. Devices for these pins can be changed with [Pr. PD07] and [Pr. PD09].
10. Attach a short-circuit connector supplied with the drive unit when the functional safety (STO function) is not used.
11. These devices can be changed to TPR1 (Touch probe 1), TPR2 (Touch probe 2), and TPR3 (Touch probe 3) with [Pr. PD05] and [Pr. PD51].
12. For the restrictions on the communication cycle, refer to "Restrictions" in this catalog.
13. For the availability of the encoder output pulse, refer to "MR-J5D2-G4(-N1) (2-Axis, Network Compatible) Specifications (400 V)" in this catalog.

Be sure to read through User's Manual for the actual wiring and use. Use the equipment after you have a full knowledge of the equipment, safety information and instructions.

MR-J5D3-G4(-N1) Standard Wiring Diagram Example

DG

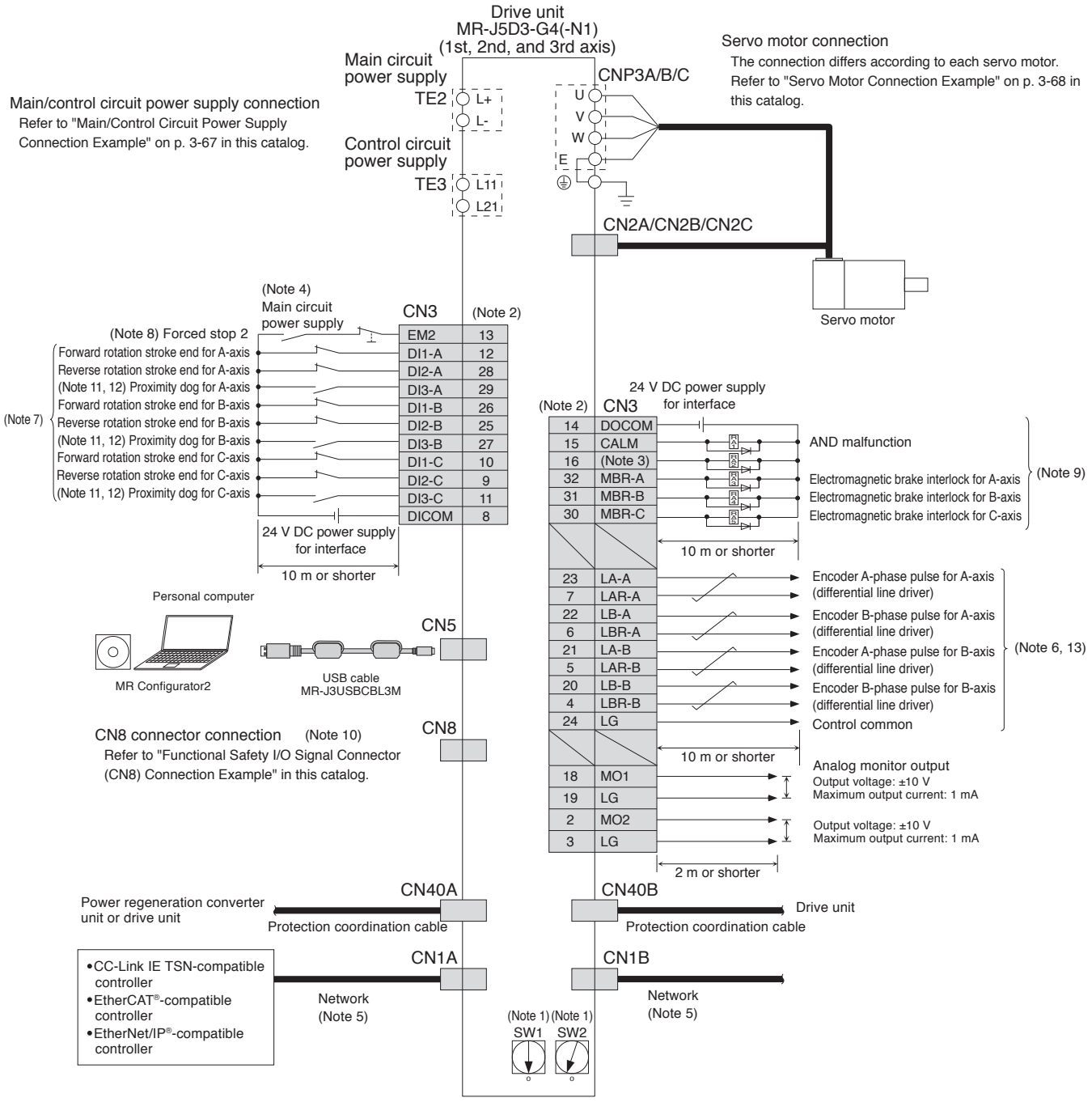

Notes:
1. The node address or the 4th octet of the IP address can be set to between 1 and 254 with a combination of the ID setting switches or the rotary switches (SW1 and SW2). Note that the number of the connectable device stations depends on the controller specifications.
2. This is for sink wiring. Source wiring is also possible.
3. CINP (AND in-position) is assigned to this pin as default. A device for this pin can be changed with [Pr. PD08].
4. To prevent an unexpected restart of the drive unit, create a circuit to turn off EM2 (Forced stop 2) when the main circuit power is turned off.
5. When branching off CC-Link IE TSN (synchronous communication function) with a switching hub, use a switching hub (class B) recommended by CC-Link Partner Association. When a switching hub (class A) is used, there are restrictions on the topologies to be used. Refer to the controller manual for details.
6. For the restrictions on the communication cycle, refer to "Restrictions" in this catalog.
7. Devices for these pins can be changed with [Pr. PD03], [Pr. PD04], and [Pr. PD05].
8. The forced stop signal is issued for three axes of the drive unit. For overall system, apply the emergency stop on the controller side.
9. Devices for these pins can be changed with [Pr. PD07] and [Pr. PD09].
10. Attach a short-circuit connector supplied with the drive unit when the functional safety (STO function) is not used.
11. These devices can be changed to TPR1 (Touch probe 1), TPR2 (Touch probe 2), and TPR3 (Touch probe 3) with [Pr. PD05].
12. For the restrictions on the communication cycle of the touch probe function, refer to "Restrictions" in this catalog.
13. For the availability of the encoder output pulse, refer to "MR-J5D3-G4(-N1) (3-Axis, Network Compatible) Specifications (400 V)" in this catalog.

Be sure to read through User's Manual for the actual wiring and use. Use the equipment after you have a full knowledge of the equipment, safety information and instructions.

Main/Control Circuit Power Supply Connection Example (Note 11)

DG

●For connecting MR-CV_ and MR-J5D_-G4(-N1)

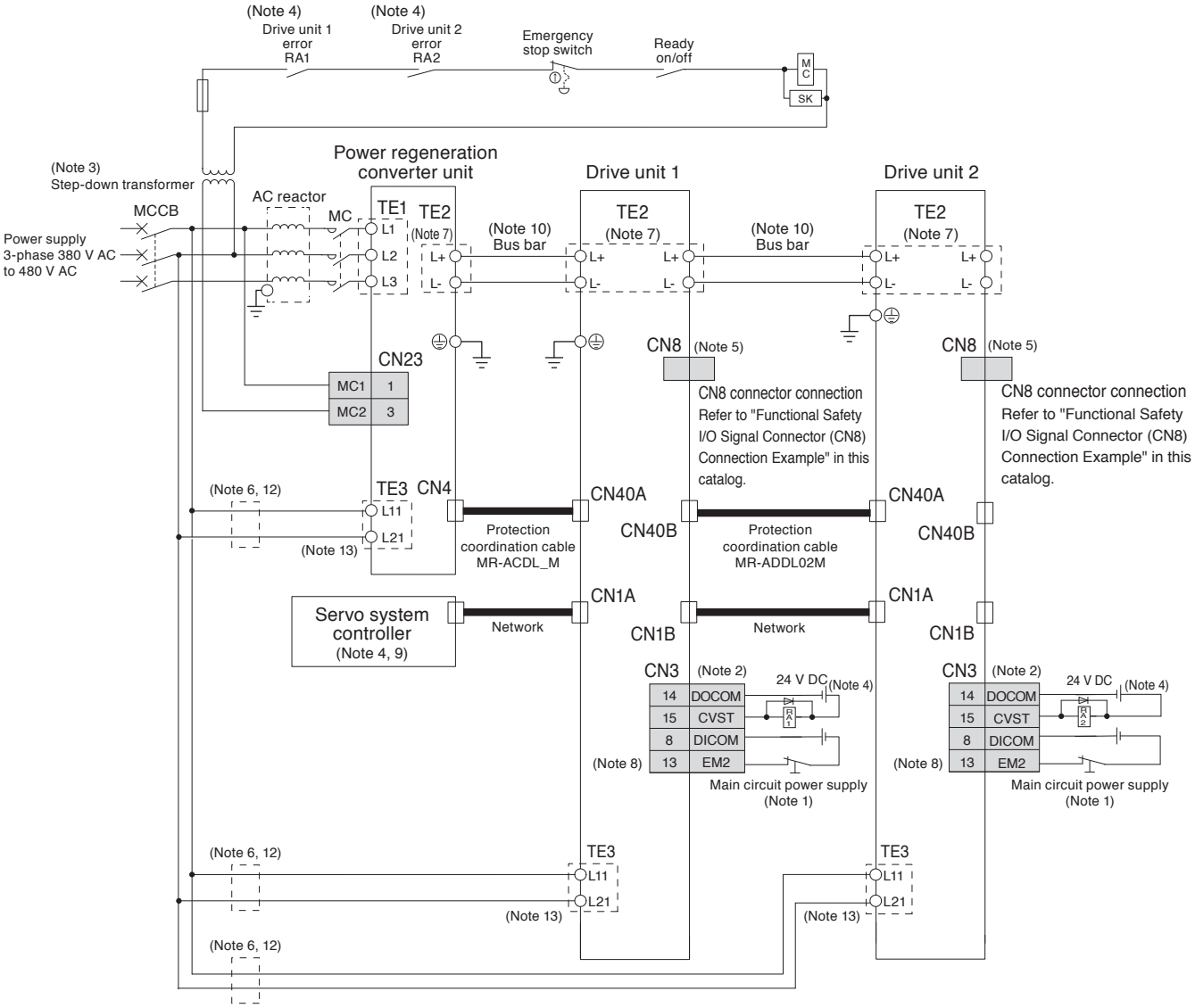

Notes:
1. To prevent an unexpected restart of the drive unit, create a circuit to turn off EM2 (Forced stop 2) when the main circuit power is turned off.
2. This is for sink wiring. Source wiring is also possible.
3. A step-down transformer is required if the power regeneration converter unit is in 400 V, and coil voltage of the magnetic contactor is in 200 V.
4. When connecting multiple drive units, create a sequence in which the servo system controller stops all axes and a sequence that shuts off the main circuit power if an alarm occurs on one axis.
5. Attach a short-circuit connector supplied with the drive unit when the functional safety (STO function) is not used.
6. Install an overcurrent protection device (molded-case circuit breaker, fuse, etc.) to protect the branch circuit.
7. Terminal varies depending on the capacity of the power regeneration converter unit and the drive unit. Refer to "MR-CV_ Power Regeneration Converter Unit Dimensions" and "MR-J5D_-G4(-N1) Dimensions" in this catalog.
8. To stop the servo motor by forcibly decelerating with EM2, parameter setting is required. Refer to "MR-J5 User's Manual" for details.
9. Refer to the controller manual for the forced stop input of the servo system controller.
10. The bus bar varies depending on the combination of the power regeneration converter unit and the drive unit. Refer to "Bus Bar" in this catalog for details.
11. This example is for when magnetic contactor drive output is enabled.
12. The control circuit power supply (L11/L21) can be connected by passing wiring. Refer to "MR-J5D User's Manual" for details.
13. Do not ground the drive unit between L11 and L21 even when the control circuit power supply is separated from the main circuit power supply using an uninterruptible power supply (UPS) or an isolation transformer.

Be sure to read through User's Manual for the actual wiring and use. Use the equipment after you have a full knowledge of the equipment, safety information and instructions.

Servo Motor Connection Example (Rotary Servo Motor)

DG

Semi Closed Loop Control System with MR-J5D_-G4(-N1)

●For HK-KT series/HK-RT (1.0 kW to 2.0 kW) series

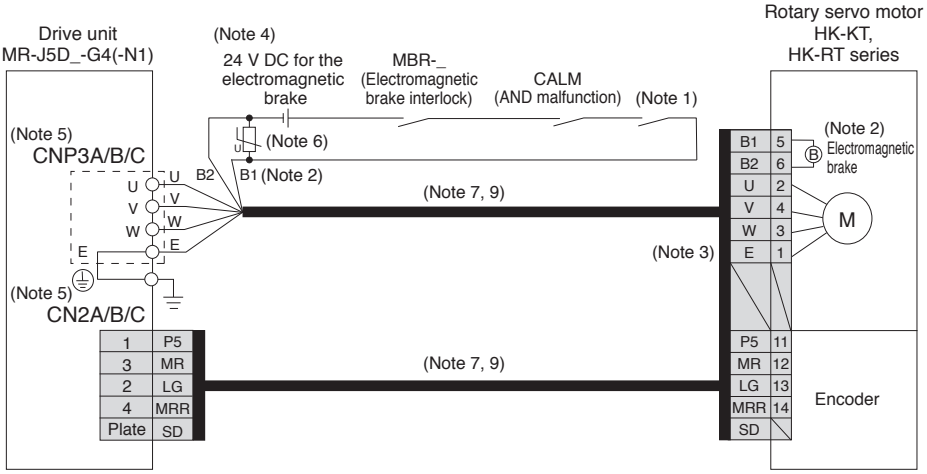

●For HK-ST series/HK-RT (3.5 kW to 7.0 kW) series

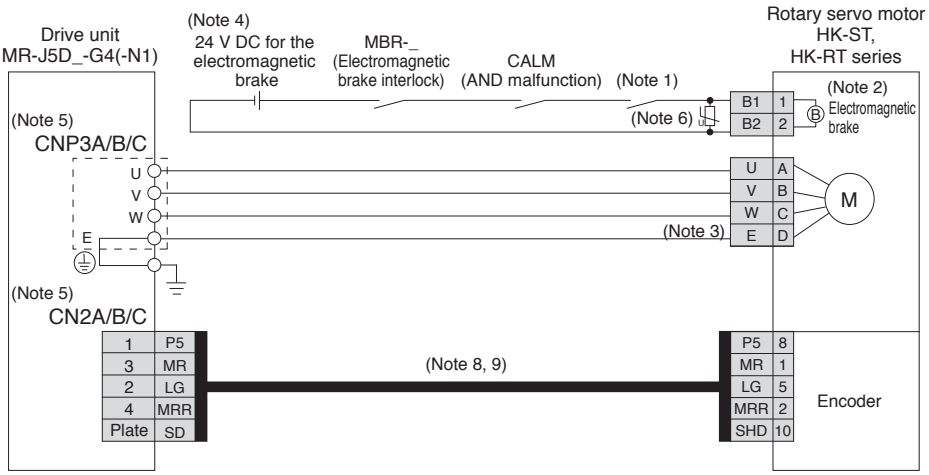

Notes: 1. Create the circuit in order to shut off by being interlocked with the emergency stop switch.
2. This is for the servo motors with an electromagnetic brake. The electromagnetic brake terminals do not have polarity.
3. Connect the grounding wire to the cabinet protective earth (PE) terminal via the drive unit for grounding the servo motor.
4. Do not use the 24 V DC interface power supply for the electromagnetic brake. Provide a dedicated power supply to the electromagnetic brake.
5. CNP3B and CN2B connectors are available for MR-J5D2-G4(-N1) and MR-J5D3-G4(-N1) drive units. CNP3C and CN2C connectors are available for MR-J5D3-G4(-N1) drive units.
6. Install a surge absorber between B1 and B2.
7. This is for using an option dual cable type. Single cable types are also available.
8. Encoder cables are available as an option.
9. Refer to "Rotary Servo Motor User's Manual (For MR-J5)" when fabricating the cables.

Be sure to read through User's Manual for the actual wiring and use. Use the equipment after you have a full knowledge of the equipment, safety information and instructions.

External Encoder Connection Specifications

DG

Refer to the following table for the encoder communication method compatible with each system and for the drive unit connector to which a load-side encoder should be connected.

System configuration	External encoder communication method	Connector		
		MR-J5D1-G4(-N1)	MR-J5D2-G4(-N1)	MR-J5D3-G4(-N1)
Fully closed loop control system (Note 3)	Two-wire type	CN2AL	CN2A (Note 1, 2) CN2B (Note 1, 2)	
	Four-wire type			
	A/B/Z-phase differential output method (Note 4)			
Scale measurement function (Note 3)	Two-wire type	CN2AL	CN2A (Note 1, 2) CN2B (Note 1, 2)	
	Four-wire type			
	A/B/Z-phase differential output method (Note 4)			

Notes: 1. MR-J4FCCBL03M junction cable is required.
2. MR-J5D2-G4(-N1) does not support a servo motor encoder with the four-wire type communication method. Use MR-J5D1-G4(-N1).
3. For the restrictions on the communication cycle, refer to "Restrictions" in this catalog.
4. For the connection of the A/B/Z-phase differential output method using the fully closed loop control system or the scale measurement function, refer to "MR-J5D User's Manual" and "MR-J5 Partner's Encoder User's Manual".

Servo Motor Connection Example (Rotary Servo Motor)

DG

Fully Closed Loop Control System with MR-J5D1-G4(-N1)

●For HK-KT series/HK-RT (1.0 kW to 2.0 kW) series

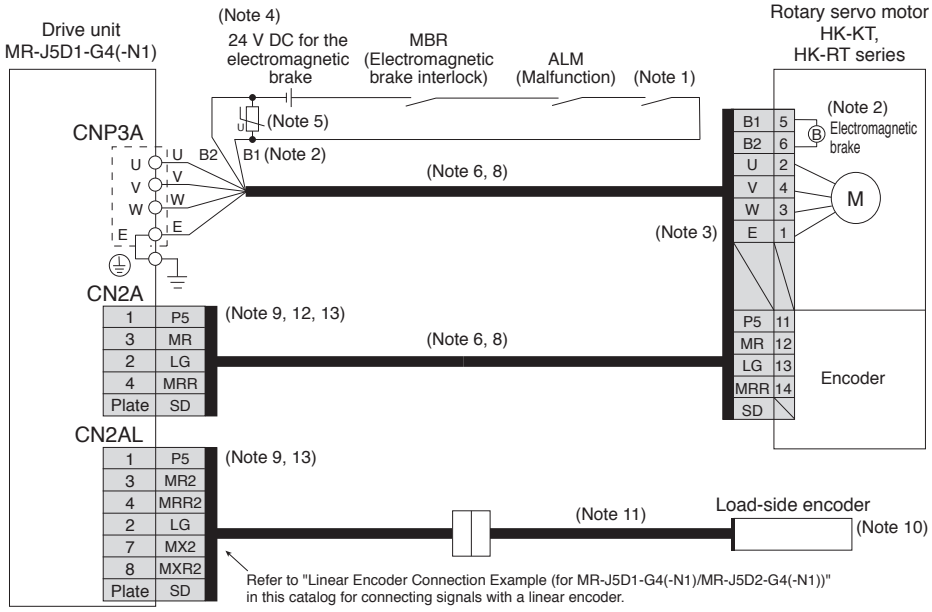

●For HK-ST series/HK-RT (3.5 kW to 7.0 kW) series

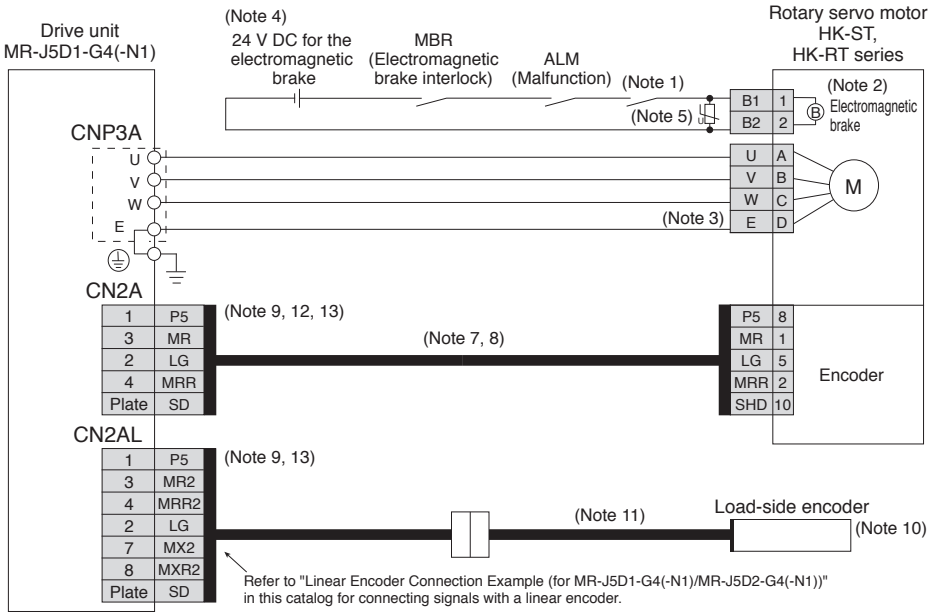

Notes:
1. Create the circuit in order to shut off by being interlocked with the emergency stop switch.
2. This is for the servo motors with an electromagnetic brake. The electromagnetic brake terminals do not have polarity.
3. Connect the grounding wire to the cabinet protective earth (PE) terminal via the drive unit for grounding the servo motor.
4. Do not use the 24 V DC interface power supply for the electromagnetic brake. Provide a dedicated power supply to the electromagnetic brake.
5. Install a surge absorber between B1 and B2.
6. This is for using an option dual cable type. Single cable types are also available.
7. Encoder cables are available as an option.
8. Refer to "Rotary Servo Motor User's Manual (For MR-J5)" when fabricating the cables.
9. The load-side encoder and the servo motor encoder are compatible with both two-wire and four-wire type communication methods.
10. For linear encoders, refer to "List of Linear Encoders" in this catalog. Refer to "MR-J5D User's Manual" for the fully closed loop control with a rotary encoder.
11. Necessary encoder cables vary depending on the load-side encoder. Refer to "MR-J5D User's Manual" and "Rotary Servo Motor User's Manual (For MR-J5)".
12. This wiring of the servo motor encoder is applicable for the two-wire type communication method.
13. When configuring a fully closed loop control system with MR-J5D1-G4(-N1), connect a servo motor encoder to CN2A connector and a load-side encoder to CN2AL connector. Do not use MR-J4FCCBL03M junction cable or a junction cable fabricated using MR-J3THMCN2 connector set.

Be sure to read through User's Manual for the actual wiring and use. Use the equipment after you have a full knowledge of the equipment, safety information and instructions.

Servo Motor Connection Example (Rotary Servo Motor)

Fully Closed Loop Control System with MR-J5D2-G4(-N1)

●For HK-KT series/HK-RT (1.0 kW to 2.0 kW) series

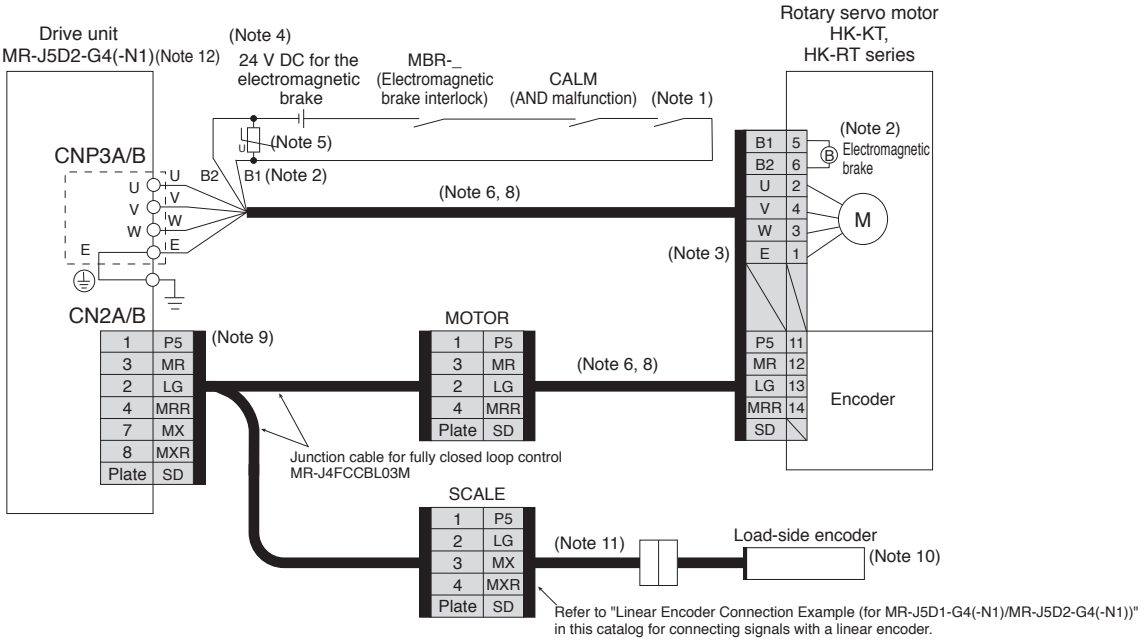

●For HK-ST series/HK-RT (3.5 kW to 7.0 kW) series

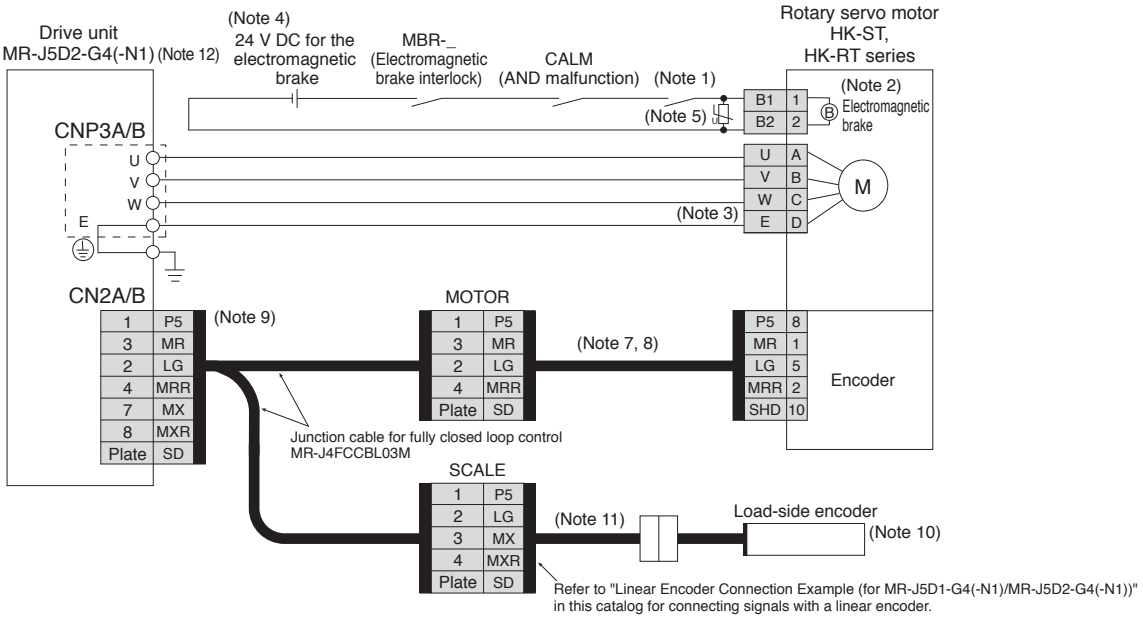

Notes: 1. Create the circuit in order to shut off by being interlocked with the emergency stop switch.
2. This is for the servo motors with an electromagnetic brake. The electromagnetic brake terminals do not have polarity.
3. Connect the grounding wire to the cabinet protective earth (PE) terminal via the drive unit for grounding the servo motor.
4. Do not use the 24 V DC interface power supply for the electromagnetic brake. Provide a dedicated power supply to the electromagnetic brake.
5. Install a surge absorber between B1 and B2.
6. This is for using an option dual cable type. Single cable types are also available.
7. Encoder cables are available as an option.
8. Refer to "Rotary Servo Motor User's Manual (For MR-J5)" when fabricating the cables.
9. For fully closed loop control, the load-side encoder and the servo motor encoder are compatible only with two-wire type communication method. Four-wire type cannot be used.
10. For linear encoders, refer to "List of Linear Encoders" in this catalog. Refer to "MR-J5D User's Manual" for the fully closed loop control with a rotary encoder.
11. Necessary encoder cables vary depending on the load-side encoder. Refer to "MR-J5D User's Manual" and "Rotary Servo Motor User's Manual (For MR-J5)".
12. MR-J5D3-G4(-N1) does not support the fully closed loop control.

Be sure to read through User's Manual for the actual wiring and use. Use the equipment after you have a full knowledge of the equipment, safety information and instructions.

Linear Encoder Connection Example (for MR-J5D1-G4(-N1)/MR-J5D2-G4(-N1))

DG

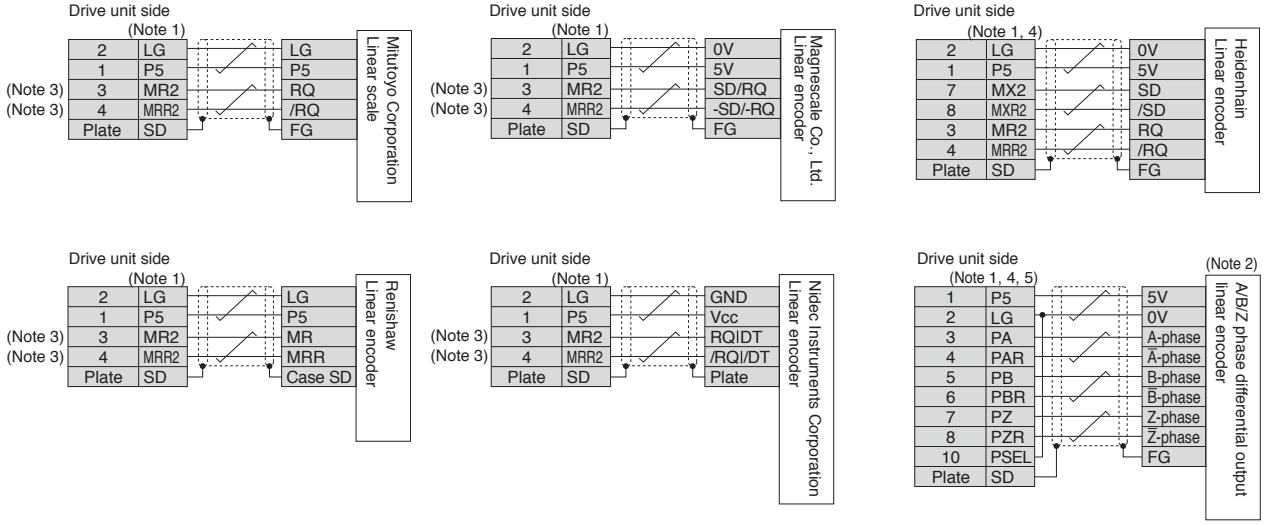

Notes:
1. For the number of the wire pairs for LG and P5, refer to "MR-J5 Partner's Encoder User's Manual".
2. If the encoder's current consumption exceeds 350 mA, supply power from an external source.
3. When configuring a fully closed loop control system with MR-J5D2-G4(-N1), connect MR and MRR of the drive unit-side connectors to MX and MXR of the SCALE connectors of MR-J4FCCBL03M.
4. This is for MR-J5D1-G4(-N1).
5. For the connection of the A/B/Z-phase differential output method using the fully closed loop control system or the scale measurement function, refer to "MR-J5D User's Manual" and "MR-J5 Partner's Encoder User's Manual".

Be sure to read through User's Manual for the actual wiring and use. Use the equipment after you have a full knowledge of the equipment, safety information and instructions.

MR-J5D_-G4(-N1) Dimensions

DG

- ●MR-J5D1-100G4(-N1)
- ●MR-J5D1-200G4(-N1)
- ●MR-J5D1-350G4(-N1)

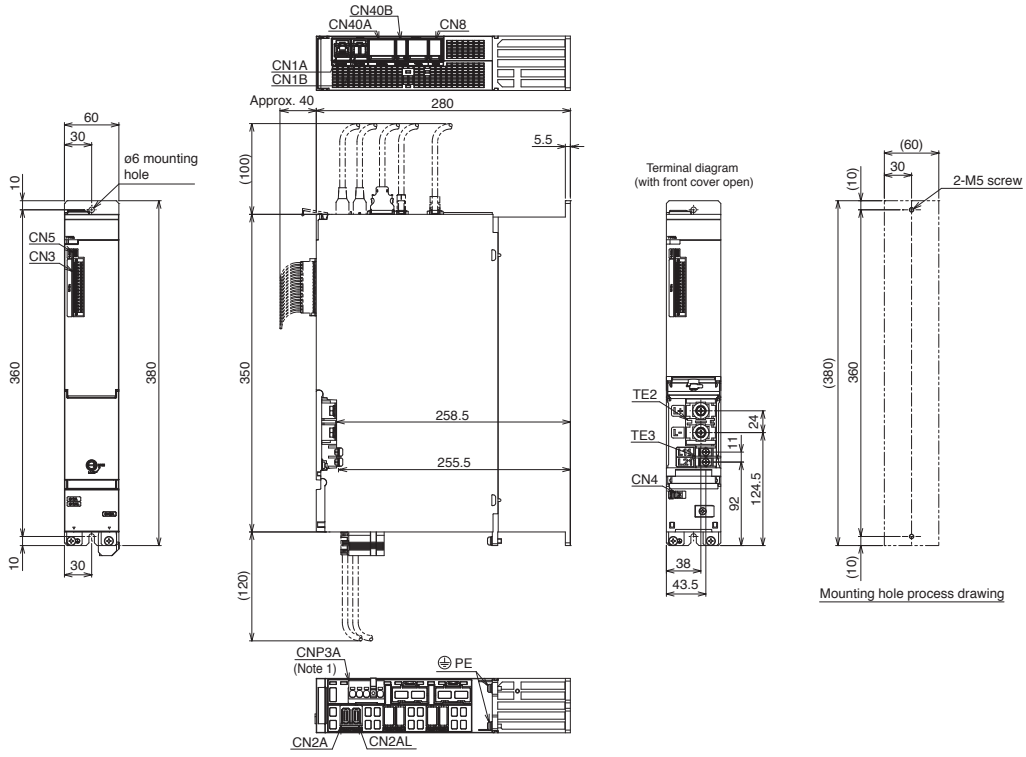

[Unit: mm]

- ●MR-J5D1-500G4(-N1)
- ●MR-J5D1-700G4(-N1)

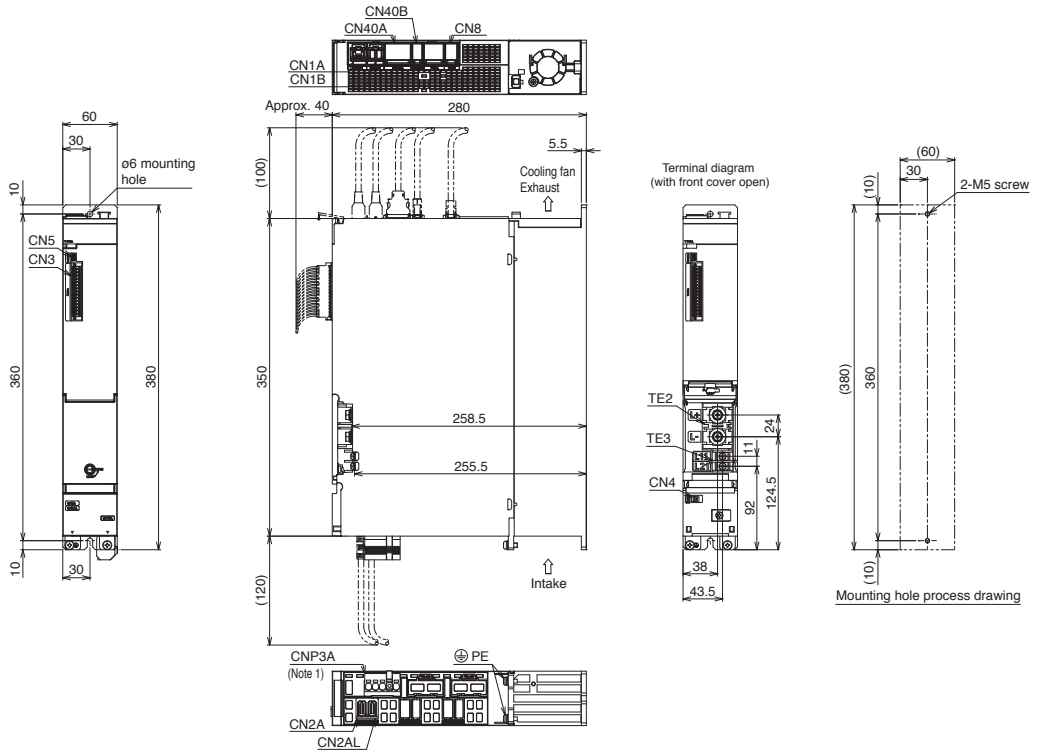

[Unit: mm]

Notes: 1. CNP3A connector is supplied with the drive unit.

MR-J5D_-G4(-N1) Dimensions

DG

●MR-J5D2-100G4(-N1)

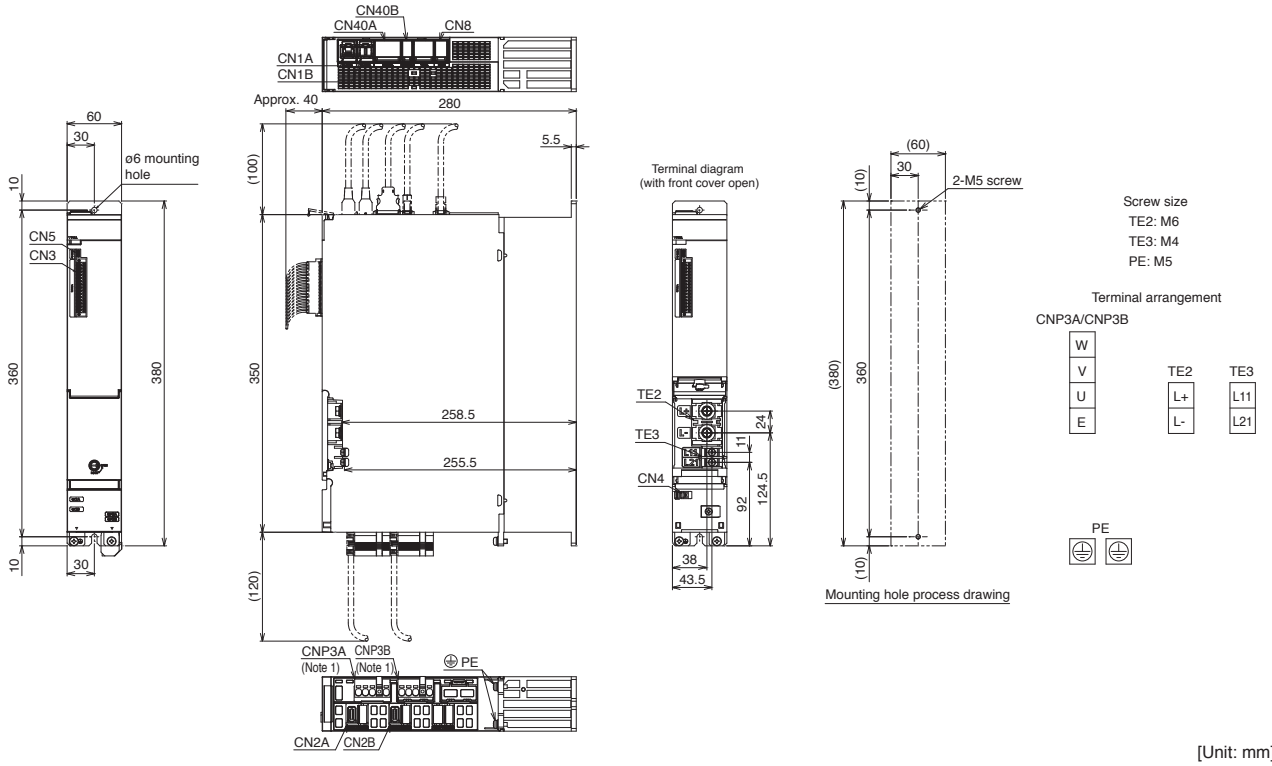

[Unit: mm]

●MR-J5D2-200G4(-N1)

●MR-J5D2-350G4(-N1)

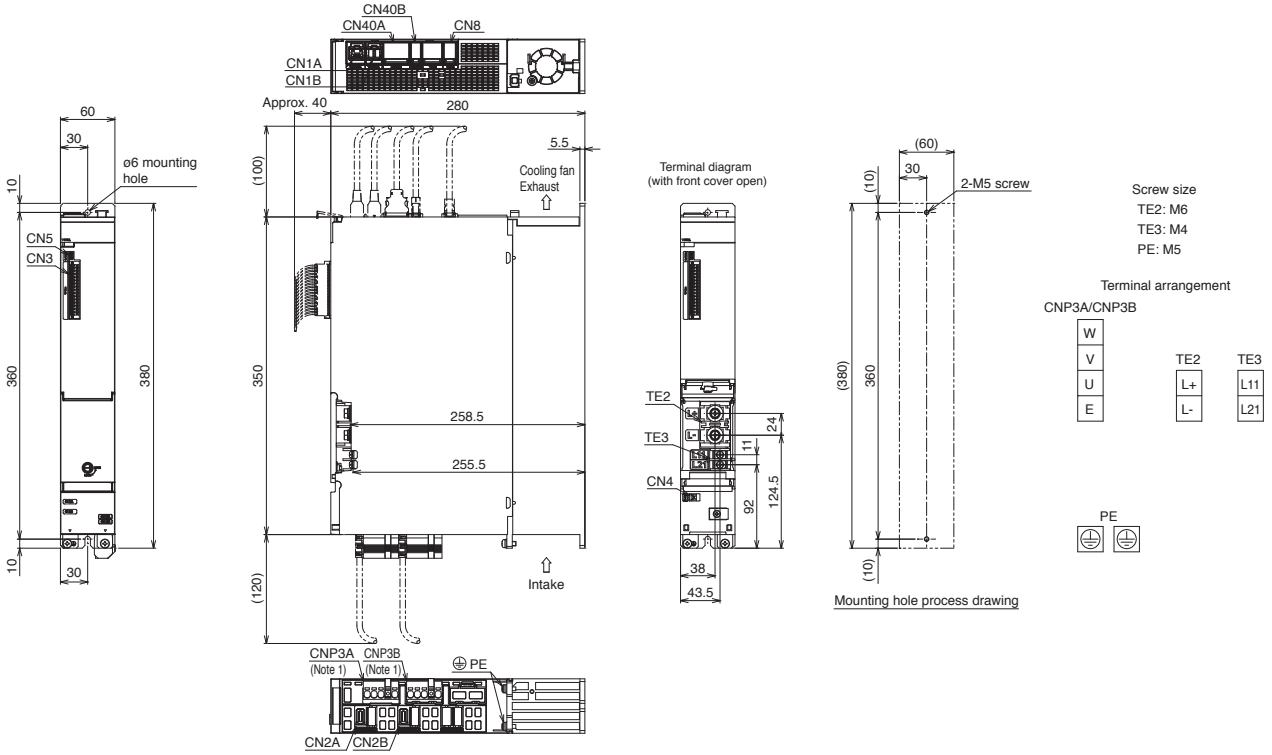

[Unit: mm]

Notes: 1. CNP3A and CNP3B connectors are supplied with the drive unit.

MR-J5D_-G4(-N1) Dimensions

●MR-J5D2-500G4(-N1)

●MR-J5D2-700G4(-N1)

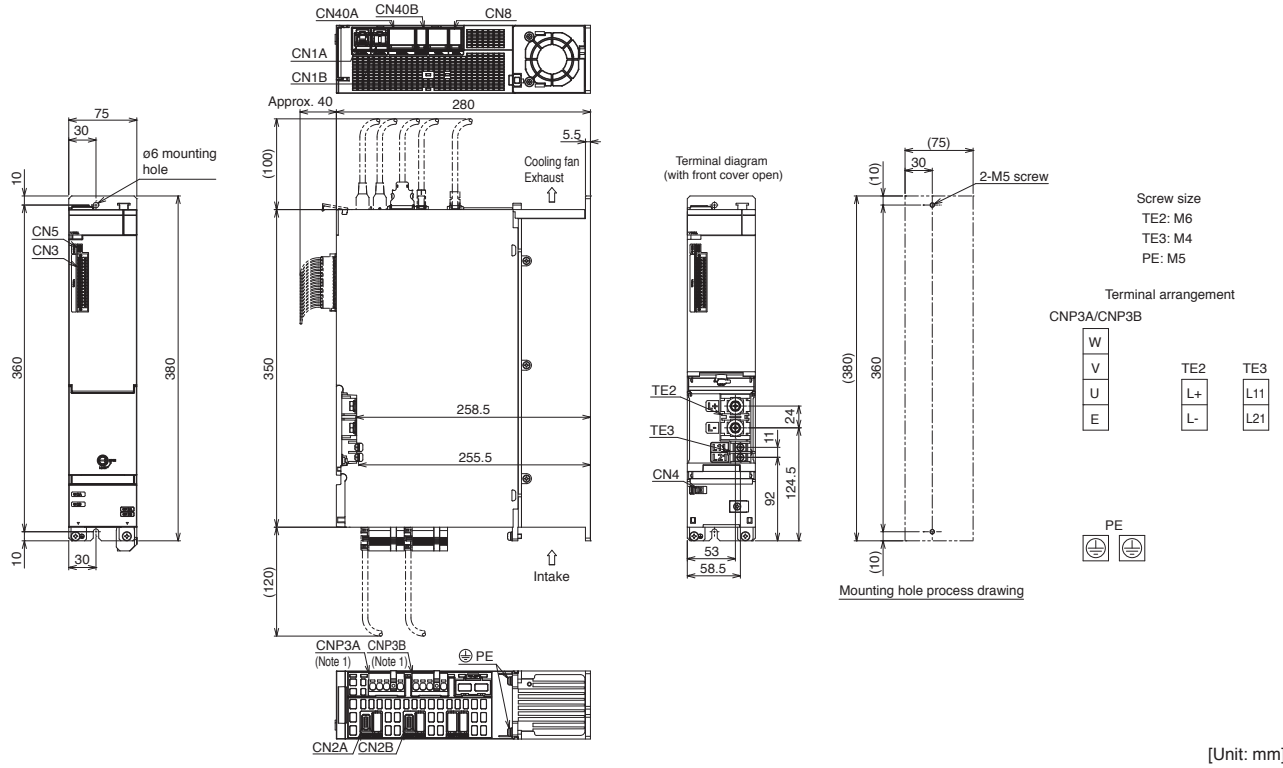

[Unit: mm]

●MR-J5D3-100G4(-N1)

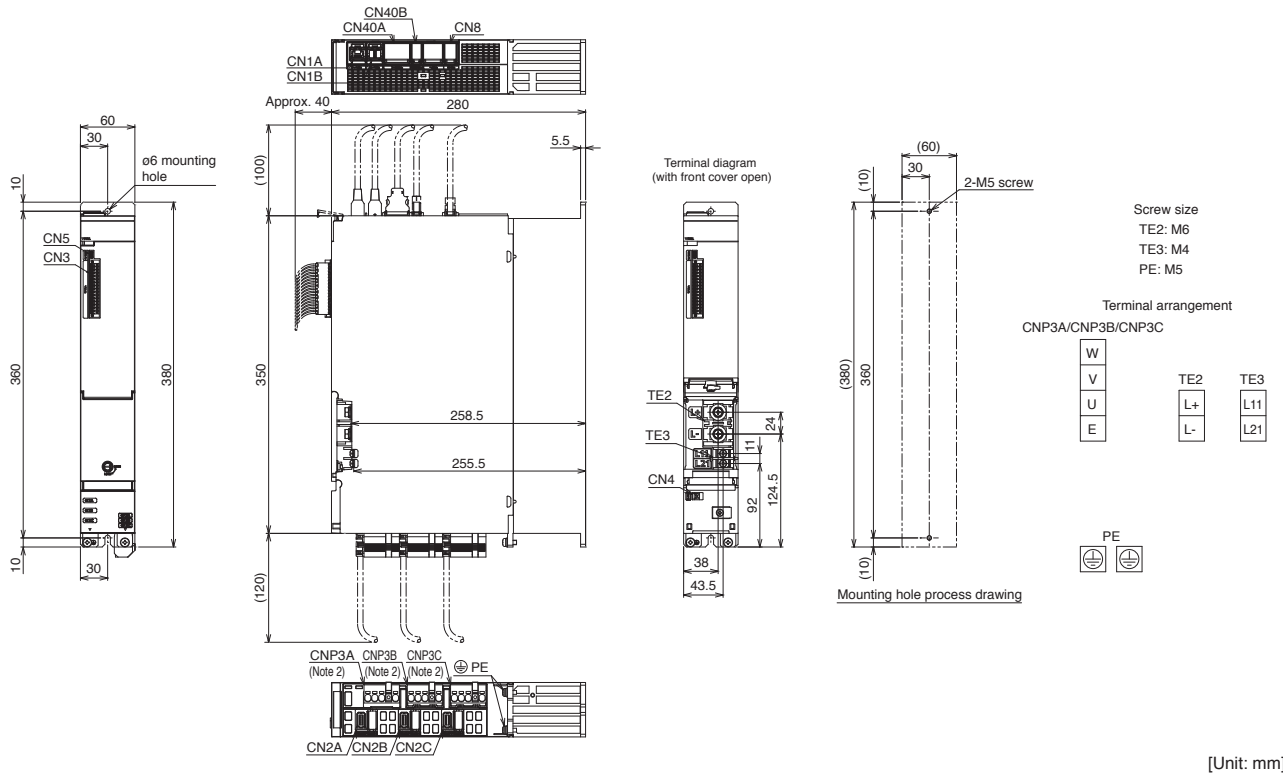

[Unit: mm]

Notes: 1. CNP3A and CNP3B connectors are supplied with the drive unit.
2. CNP3A, CNP3B, and CNP3C connectors are supplied with the drive unit.

MR-J5D_-G4(-N1) Dimensions

DG

●MR-J5D3-200G4(-N1)

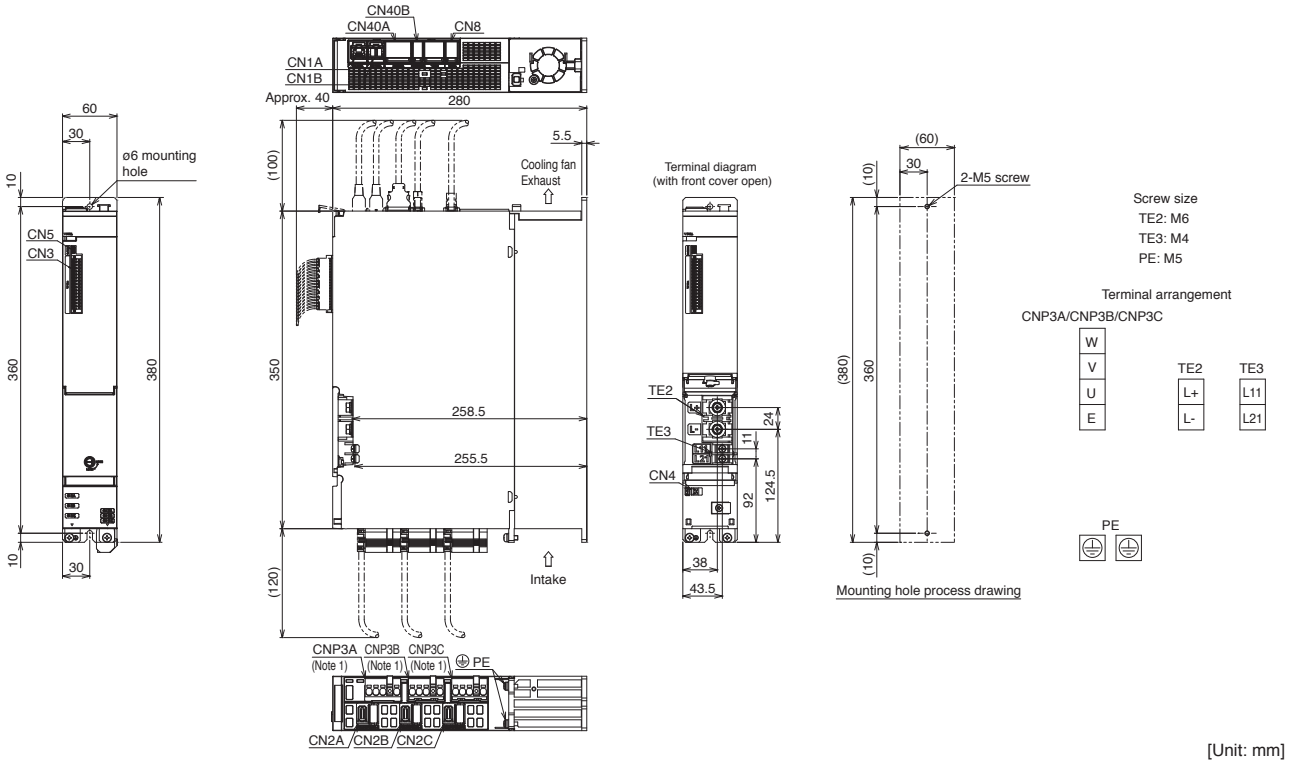

[Unit: mm]

Notes: 1. CNP3A, CNP3B, and CNP3C connectors are supplied with the drive unit.

MR-J5-G_/MR-J5W_-G(-N1)/MR-J5D_-G4(-N1) Positioning Function: Point Table Method

G G-HS G-RJ WG DG

Set the position and speed data to the point table, and select the point table No. with the command interface signal to start the positioning operation.

Item		Description
Command interface		Object dictionary
Operation specifications		Positioning by specifying the point table No. (255 points)
System		Signed absolute value command method
Position command input	Absolute value command method	Setting in the point table Setting range of feed length for one point: -2147483648 to 2147483647 [µm], -214748.3648 to 214748.3647 [inch], -2147483648 to 2147483647 [pulse], -360.000 to 360.000 [degree]
Speed command input		Set the servo motor speed in the point table. Set the acceleration/deceleration time constants and acceleration/deceleration in the point table. Set the S-pattern acceleration/deceleration time constant in [Pr. PT51]. The speed unit can be selected ([r/min], command unit/s) The acceleration/deceleration unit can be selected ([ms], command unit/s^2).
Torque limit		Set by the servo parameter or object dictionary.
Point table mode (pt)	One positioning operation	Point table No. input method Perform one positioning operation based on the position command and speed command.
	Continuous positioning operation	Speed change operation (2nd gear to 255th gear)/ Continuous positioning operation (2 points to 255 points)/ Continuous operation to the point table selected at startup/ Continuous operation to the point table No. 1
JOG operation mode (jg)	JOG operation	Perform inching operation in the network communication function based on the speed command.
Homing mode (hm) (Note 1)		Dog type (rear end detection, Z-phase reference), stopper type (stopper position reference), count type (front end detection, Z-phase reference), dog type (rear end detection, rear end reference), count type (front end detection, front end reference), dog cradle type, dog type last Z-phase reference, dog type front end reference, dogless Z-phase reference, Homing on negative limit switch and index pulse (method 1), Homing on positive limit switch and index pulse (method 2), Homing on positive home switch and index pulse (method 3, 4), Homing on negative home switch and index pulse (method 5, 6), Homing on home switch and index pulse (method 7, 8, 9, 10, 11, 12, 13, 14), Homing without index pulse (method 17, 18, 19, 20, 21, 22, 23, 24, 27, 28), Homing on index pulse (method 33, 34), Homing on current position (method 35, 37)
Function on positioning operation		Absolute position detection/external limit switch/software position limit/ function for positioning to the home, etc.

Notes: 1. For the servo amplifier firmware version supporting the methods of No. 9, 10, 13, 14, 17, 18, refer to "MR-J5 User's Manual".

MR-J5-G_/MR-J5W_-G(-N1)/MR-J5D_-G4(-N1) Positioning Function: Point Table Method

G G-HS G-RJ WG DG

Absolute value command method: travels to a specified address (absolute value) with reference to the home position

Item	Setting range	Description
Point table No.	1 to 255	Specify a point table in which a target position, servo motor speed, acceleration/deceleration, acceleration time constant/deceleration time constant, dwell, auxiliary function, and M code will be set.
Target position (Note 1) (position data)	-2147483.648 to 2147483.647 [mm] -214748.3648 to 214748.3647 [inch] -360.000 to 360.000 [degree] -2147483648 to 2147483647 [pulse]	Set a travel distance. (1) When using as absolute position command method Set a target address (absolute value). (2) When using as relative position command method Set a travel distance. Reverse rotation command is applied with a minus sign.
Servo motor speed (Note 2)	0 to maximum speed [r/min] 0 to 2147483.647 [mm/s] 0 to 214748.3647 [inch/s] 0 to 2147483.647 [degree/s] 0 to 2147483647 [pulse/s]	Set a command speed for the servo motor in positioning.
Acceleration	0 to 2147483.647 [mm/s^2] 0 to 214748.3647 [inch/s^2] 0 to 2147483.647 [degree/s^2] 0 to 2147483647 [pulse/s^2]	Set an acceleration for the servo motor to reach the set speed. (Acceleration time [s] = Servo motor speed/Acceleration)
Acceleration time constant	0 to 20000 [ms]	Set a time period for the servo motor to reach the rated speed.
Deceleration	0 to 2147483.647 [mm/s^2] 0 to 214748.3647 [inch/s^2] 0 to 2147483.647 [degree/s^2] 0 to 2147483647 [pulse/s^2]	Set a deceleration for the servo motor to decelerate from the set speed to a stop. (Deceleration time [s] = Servo motor speed/Deceleration)
Deceleration time constant	0 to 20000 [ms]	Set a time period for the servo motor to decelerate from the set speed to a stop.
Dwell	0 to 20000 [ms]	Set a dwell. When the dwell is set, the position command for the next point table will be started after the position command for the selected point table is completed and the set dwell is passed. The dwell is disabled when the auxiliary function is set to 0 or 2. Continuous operation is enabled when the auxiliary function is set to 1, 3, 8, 9, 10, or 11 and the dwell is set to 0.
Auxiliary function	0 to 3, 8 to 11	Set auxiliary function. (1) When using the point table with the absolute position command method 0: Automatic operation for a selected point table is performed. 1: Automatic operation is performed to the next point table. 8: Automatic operation for a point table selected at startup is performed. 9: Automatic operation of the point table No. 1 is performed. (2) When using the point table with the relative position command method 2: Automatic operation for a selected point table is performed. 3: Automatic operation is performed to the next point table. 10: Automatic operation for a point table selected at startup is performed. 11: Automatic operation of the point table No. 1 is performed.
M code	0 to 255	Set a code to be outputted when the positioning is complete.

Notes: 1. Change the unit to mm/inch/degree/pulse with [Pr. PT01].
2. The speed unit is r/min for the rotary servo motors and the direct drive motors, and mm/s for the linear servo motors.

Example of setting point table data

Point table example

Point table No.	Target position (position data)	Servo motor speed [r/min]	Acceleration time constant [ms]	Deceleration time constant [ms]	Dwell [ms]	Auxiliary function	M code
1	1000	2000	200	200	0	1	1
2	2000	1600	100	100	0	0	2
:	:	:	:	:	:	:	:
255	3000	3000	100	100	0	2	99

Operation

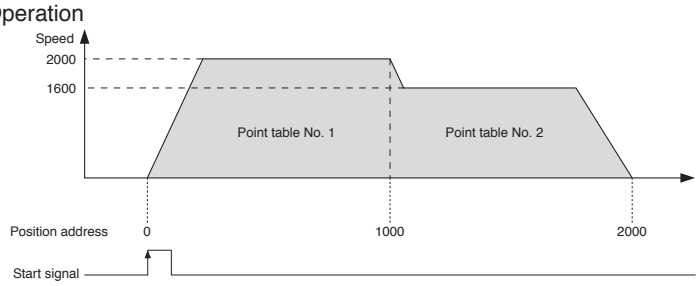

Restrictions

G G-HS G-RJ WG DG

The restrictions on the communication cycle for the functions in the list are as follows.

Communication cycle

●For MR-J5-G(4)/MR-J5-G(4)-HS/MR-J5-G(4)-RJ/MR-J5W_-G/MR-J5D_-G4

Category	Function	Communication cycle (minimum)						
		MR-J5-G(4) (Note 1, 4)	MR-J5-G(4)-HS/ MR-J5-G(4)-RJ (Note 1, 4)	MR-J5W2-G (Note 1, 4)	MR-J5W3-G (Note 4)	MR-J5D1-G4 (Note 4)	MR-J5D2-G4 (Note 4)	MR-J5D3-G4 (Note 4)
Control mode	Profile position mode (pp)	250 µs	250 µs	500 µs	500 µs	250 µs	500 µs	500 µs
	Profile velocity mode (pv)	250 µs	250 µs	500 µs (Note 6)	500 µs (Note 6)	250 µs	500 µs (Note 6)	500 µs (Note 6)
	Profile torque mode (tq)	250 µs	250 µs	500 µs (Note 6)	500 µs (Note 6)	250 µs	500 µs (Note 6)	500 µs (Note 6)
	Continuous operation to torque control mode (ct)	62.5 µs	62.5 µs	Not restricted	Not restricted	62.5 µs	Not restricted	Not restricted
	Positioning mode (point table method)	250 µs	250 µs	500 µs	500 µs	250 µs	500 µs	500 µs
Network	Driver communication function	125 µs (Note 3)	125 µs (Note 3)	-	-	125 µs (Note 3)	-	-
Position detection	Fully closed loop control	125 µs	125 µs	250 µs	-	125 µs	250 µs	-
	Scale measurement function	125 µs	125 µs	250 µs	-	125 µs	250 µs	-
I/O, monitor	A/B/Z-phase output	Not restricted	Not restricted	125 µs	250 µs	Not restricted	125 µs	Not restricted
	Touch probe function	62.5 µs	62.5 µs	250 µs	250 µs	62.5 µs	250 µs	Not restricted
Functional safety	Safety sub-function (Note 2)	-	125 µs	125 µs	Not restricted	125 µs	125 µs	Not restricted
	Safety sub-function (Network connection) (Note 2, 5)	-	125 µs	500 µs	500 µs	125 µs	500 µs	500 µs
	Safety sub-function (position/speed observation by using a servo motor with functional safety) (Note 2)	-	125 µs	500 µs	500 µs	125 µs	500 µs	500 µs
Unit	Command unit selection function (degree unit) (Note 2)	250 µs	250 µs	500 µs	500 µs	250 µs	500 µs	500 µs
	Command unit selection function (command unit/s) (Note 2)	125 µs	125 µs	250 µs	250 µs	125 µs	250 µs	Not restricted

●For MR-J5-G(4)-N1/MR-J5-G(4)-HSN1/MR-J5-G(4)-RJN1/MR-J5W_-G-N1/MR-J5D_-G4-N1

Category	Function	Communication cycle (minimum)						
		MR-J5-G(4)-N1	MR-J5-G(4)-HSN1/ MR-J5-G(4)-RJN1	MR-J5W2-G-N1	MR-J5W3-G-N1	MR-J5D1-G4-N1	MR-J5D2-G4-N1	MR-J5D3-G4-N1
Control mode	Profile position mode (pp)	250 µs	250 µs	500 µs	500 µs	250 µs	500 µs	500 µs
	Profile velocity mode (pv)	250 µs	250 µs	500 µs (Note 6)	500 µs (Note 6)	250 µs	500 µs (Note 6)	500 µs (Note 6)
	Profile torque mode (tq)	250 µs	250 µs	500 µs (Note 6)	500 µs (Note 6)	250 µs	500 µs (Note 6)	500 µs (Note 6)
	Positioning mode (point table method)	250 µs	250 µs	500 µs	500 µs	250 µs	500 µs	500 µs
Functional safety	Safety sub-function (Network connection) (Note 2)	-	250 µs	500 µs	500 µs	250 µs	500 µs	500 µs
	Safety sub-function (position/speed observation by using a servo motor with functional safety) (Note 2)	-	250 µs	500 µs	500 µs	250 µs	500 µs	500 µs
Unit	Command unit selection function (degree unit) (Note 2)	250 µs	250 µs	500 µs	500 µs	250 µs	500 µs	500 µs

Notes: 1. When connecting a servo amplifier with a communication cycle of 31.25 µs and 62.5 µs, use the servo amplifier firmware version A6 or later.
2. For details of the function, refer to "MR-J5 User's manual".
3. When using the driver communication function, set the network communication cycle to 125 µs or 250 µs.
4. When connecting a servo amplifier with a communication cycle of 1.5 ms, 2.5 ms, 3 ms, 3.5 ms, 4.5 ms, 5 ms, 5.5 ms, 6 ms, 6.5 ms, 7 ms, or 7.5 ms, use the servo amplifier firmware version E0 or later.
5. When the safety sub-function through the network connection is used, the driver communication function is not available.
6. Use the servo amplifier firmware version E8 or later.

MR-J5-B_ Connections with Peripheral Equipment (Note 1)

B B-RJ

Peripheral equipment is connected to MR-J5-B_ as described below. Connectors, cables, options, and other necessary equipment are available so that users can set up the servo amplifier easily and start using it right away.

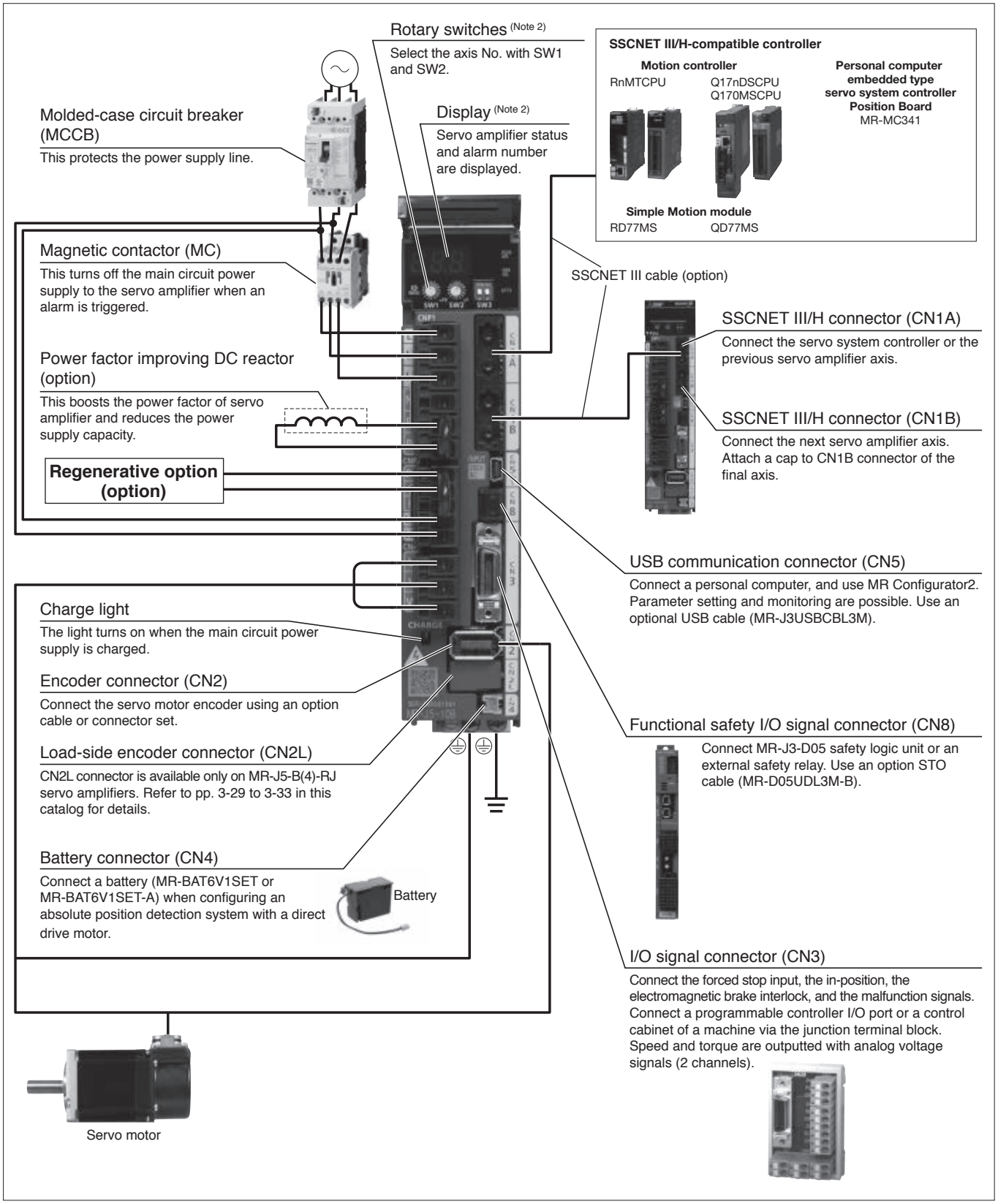

Notes: 1. The connection with the peripheral equipment is an example for MR-J5-350B(4)(-RJ) or smaller servo amplifiers. Refer to "MR-J5 User's Manual" for the actual connections.
2. This picture shows the display cover open.

MR-J5-B_ (SSCNET III/H) Specifications (200 V)

B B-RJ

Servo amplifier model MR-J5-_(-RJ)			10B	20B	40B	60B	70B	100B	200B	350B	500B	700B	12KB	17KB	25KB
Output	Voltage		3-phase 0 V AC to 240 V AC												
	Rated current	[A]	1.3	1.8	2.8	3.2	5.8	6.0	11.0	17.0	28.0	37.0	68.0	87.0	126.0
Main circuit power supply input	Voltage/ frequency (Note 1)	AC input	3-phase or 1-phase 200 V AC to 240 V AC, 50 Hz/60 Hz					3-phase or 1-phase 200 V AC to 240 V AC, 50 Hz/60 Hz (Note 7)		3-phase 200 V AC to 240 V AC, 50 Hz/60 Hz					
		DC input (Note 8)	283 V DC to 340 V DC												
	Rated current [A] (Note 6)	AC input	0.9 (1.5)	1.5 (2.5)	2.6 (4.5)	3.2 (5.0)	3.8 (6.5)	5.0 (10.5)	10.5 (15.8)	16.0	21.7	28.9	52.0	72.2	109.7
		DC input	1.1	1.8	3.2	3.5	4.6	6.0	12.4	19.4	26.5	38.9	63.6	77.7	132.9
	Permissible voltage fluctuation	AC input	3-phase or 1-phase 170 V AC to 264 V AC					3-phase or 1-phase 170 V AC to 264 V AC (Note 7)		3-phase 170 V AC to 264 V AC					
		DC input (Note 8)	241 V DC to 374 V DC												
	Permissible frequency fluctuation		±5 % maximum												
Control circuit power supply input	Voltage/ frequency	AC input	1-phase 200 V AC to 240 V AC, 50 Hz/60 Hz												
		DC input (Note 8)	283 V DC to 340 V DC												
	Rated current	[A]	0.2								0.3				
	Permissible voltage fluctuation	AC input	1-phase 170 V AC to 264 V AC												
		DC input (Note 8)	241 V DC to 374 V DC												
	Permissible frequency fluctuation		±5 % maximum												
	Power consumption	[W]	30										45		
Interface power supply			24 V DC ± 10 % (required current capacity: 0.3 A (including CN8 connector signals))												
Control method			Sine-wave PWM control/current control method												
Permissible regenerative power	Built-in regenerative resistor (Note 2, 3)	[W]	-	10			30		100		130	170	-		
	External regenerative resistor (standard accessory) (Note 2, 3, 14, 15)	[W]	-										500 (800)	850 (1300)	
Dynamic brake (Note 4)			Built-in										External option (Note 11, 13)		
SSCNET III/H	Communication cycle (Note 10)		0.222 ms, 0.444 ms, 0.888 ms												
Communication function	USB		Connect a personal computer (MR Configurator2 compatible)												
Encoder output pulse	MR-J5-B(-RJ)		Compatible (A/B/Z-phase pulse)												
	MR-J5-B-LL		Not compatible												
Analog monitor			2 channels												

MR-J5-B_ (SSCNET III/H) Specifications (200 V)

B B-RJ

Servo amplifier model MR-J5-_(-RJ)			10B	20B	40B	60B	70B	100B	200B	350B	500B	700B	12KB	17KB	25KB
Digital I/O	MR-J5-B(-RJ)		DI 4 points, DO 3 points												
	MR-J5-B-LL		DI 1 points, DO 2 points												
Fully closed loop control	MR-J5-B(-RJ)		Supported												
	MR-J5-B-LL		Not supported												
Scale measurement function	MR-J5-B(-RJ)		Supported												
	MR-J5-B-LL		Not supported												
Load-side encoder interface	MR-J5-B		Mitsubishi Electric high-speed serial communication												
	MR-J5-B-RJ		Mitsubishi Electric high-speed serial communication, A/B/Z-phase differential input signal												
	MR-J5-B-LL		Not supported												
Pressure control	MR-J5-B(-RJ)		Not supported												
	MR-J5-B-LL	Pressure feedback voltage	0 V to 10 V												
		Pressure feedback cycle	One-point mode: 62.5 µs												
		Pressure control mode	Basic mode, pressure model adaptive mode												
Servo functions			Advanced vibration suppression control II, adaptive filter II, robust filter, quick tuning, auto tuning, one-touch tuning, tough drive function, drive recorder function, machine diagnosis function (including failure prediction), power monitoring function, lost motion compensation function, super trace control, continuous operation to torque control mode, driver communication function												
Protective functions	MR-J5-B(-RJ)		Overcurrent shut-off, regenerative overvoltage shut-off, overload shut-off (electronic thermal), servo motor overheat protection, encoder error protection, regenerative error protection, undervoltage protection, instantaneous power failure protection, overspeed protection, error excessive protection, magnetic pole detection protection, linear servo control fault protection												
	MR-J5-B-LL		Overcurrent shut-off, regenerative overvoltage shut-off, overload shut-off (electronic thermal), servo motor overheat protection, encoder error protection, regenerative error protection, undervoltage protection, instantaneous power failure protection, overspeed protection, error excessive protection												
Safety sub-function, Safety performance			Refer to "Safety Sub-Functions" in section 1 of this catalog.												
Structure (IP rating)			Natural cooling, open (IP20)				Force cooling, open (IP20)				Force cooling, open (IP20) (Note 9)		Force cooling, open (IP20) (Note 12, 16)		
Close mounting	3-phase power supply input		Possible (Note 5)										Not possible		
	1-phase power supply input		Possible (Note 5)					Not possible		-					
Mass		[kg]	0.8		1.0		1.4		2.2		3.7	6.2	12.7		18.1

Notes:
1. Rated output and speed of a rotary servo motor and a direct drive motor; and continuous thrust and maximum speed of a linear servo motor are applicable when the servo amplifier is operated within the specified power supply voltage and frequency.
2. Select the most suitable regenerative option for your system with our Drive System Sizing Software Motorizer.
3. Refer to "Regenerative Option" in this catalog for the permissible regenerative power [W] when a regenerative option is used.
4. When using the dynamic brake, refer to "MR-J5 User's Manual" for the permissible load to motor inertia ratio and the permissible load to mass ratio.
5. When the servo amplifiers are closely mounted, keep the ambient temperature within 0 °C to 45 °C, or use the servo amplifiers at 75 % or less of the effective load ratio.
6. The values in brackets are the rated current for the 1-phase power supply input.
7. When the servo amplifier is used with a 1-phase power supply and combined with a servo motor of over 750 W, use the servo amplifiers at 75 % or less of the effective load ratio.
8. For a connection example of power supply circuit with DC input, refer to "MR-J5 User's Manual".
9. The connector part is excluded.
10. The communication cycle depends on the controller specifications and the number of axes connected.
11. Use an external dynamic brake with the 12 kW or larger servo amplifiers. Failure to do so will cause an accident because the servo motor does not stop immediately but coasts at emergency stop. Ensure the safety in the entire equipment.
12. This product is certified as IP00.
13. The external dynamic brake cannot be used to comply with the SEMI-F47 standard. Do not assign DB (Dynamic brake interlock) to the output device. If DB (Dynamic brake interlock) is assigned, the servo amplifier switches to servo-off status when an instantaneous power failure occurs.
14. The values in brackets are applicable when cooling fans (two units of 92 mm × 92 mm, minimum air flow: 1.0 m^3/min) are installed, and then [Pr. PA02] is changed.
15. Servo amplifiers without an enclosed regenerative resistor are also available. Refer to "Model Designation for 1-Axis Servo Amplifier" in this catalog for details.
16. Terminal blocks are excluded.

MR-J5-B_ (SSCNET III/H) Specifications (400 V)

B B-RJ

Servo amplifier model MR-J5-_(-RJ)			60B4	100B4	200B4	350B4	500B4	700B4	12KB4	17KB4	25KB4
Output	Voltage		3-phase 0 V AC to 480 V AC								
	Rated current	[A]	1.6	2.8	5.5	8.6	14	17	32.0	41.0	63.0
Main circuit power supply input	Voltage/ frequency (Note 1)	AC input	3-phase 380 V AC to 480 V AC, 50 Hz/60 Hz								
	Rated current	[A]	1.4	2.5	5.1	7.9	10.8	14.4	26.0	36.1	54.8
	Permissible voltage fluctuation	AC input	3-phase 323 V AC to 528 V AC								
	Permissible frequency fluctuation		±5 % maximum								
Control circuit power supply input	Voltage/ frequency	AC input	1-phase 380 V AC to 480 V AC, 50 Hz/60 Hz								
	Rated current	[A]	0.1				0.2				
	Permissible voltage fluctuation	AC input	1-phase 323 V AC to 528 V AC								
	Permissible frequency fluctuation		±5 % maximum								
	Power consumption	[W]	30				45				
Interface power supply			24 V DC ± 10 % (required current capacity: 0.3 A (including CN8 connector signals))								
Control method			Sine-wave PWM control/current control method								
Permissible regenerative power	Built-in regenerative resistor (Note 2, 3)	[W]	15		100	120	130	170	-		
	External regenerative resistor (standard accessory) (Note 2, 3, 9, 10)	[W]	-						500 (800)	850 (1300)	
Dynamic brake (Note 4)			Built-in						External option (Note 6, 8)		
SSCNET III/H	Communication cycle (Note 5)		0.222 ms, 0.444 ms, 0.888 ms								
Communication function	USB		Connect a personal computer (MR Configurator2 compatible)								
Encoder output pulse	MR-J5-B4(-RJ)		Compatible (A/B/Z-phase pulse)								
	MR-J5-B4-LL		Not compatible								
Analog monitor			2 channels								

MR-J5-B_ (SSCNET III/H) Specifications (400 V)

B B-RJ

Servo amplifier model MR-J5-_(-RJ)			60B4	100B4	200B4	350B4	500B4	700B4	12KB4	17KB4	25KB4
Digital I/O	MR-J5-B4(-RJ)		DI 4 points, DO 3 points								
	MR-J5-B4-LL		DI 1 points, DO 2 points								
Fully closed loop control	MR-J5-B4(-RJ)		Supported								
	MR-J5-B4-LL		Not supported								
Scale measurement function	MR-J5-B4(-RJ)		Supported								
	MR-J5-B4-LL		Not supported								
Load-side encoder interface	MR-J5-B4		Mitsubishi Electric high-speed serial communication								
	MR-J5-B4-RJ		Mitsubishi Electric high-speed serial communication, A/B/Z-phase differential input signal								
	MR-J5-B4-LL		Not supported								
Pressure control	MR-J5-B4(-RJ)		Not supported								
	MR-J5-B4-LL	Pressure feedback voltage	0 V to 10 V								
		Pressure feedback cycle	One-point mode: 62.5 μs								
		Pressure control mode	Basic mode, pressure model adaptive mode								
Servo functions			Advanced vibration suppression control II, adaptive filter II, robust filter, quick tuning, auto tuning, one-touch tuning, tough drive function, drive recorder function, machine diagnosis function (including failure prediction), power monitoring function, lost motion compensation function, super trace control, continuous operation to torque control mode, driver communication function								
Protective functions	MR-J5-B4(-RJ)		Overcurrent shut-off, regenerative overvoltage shut-off, overload shut-off (electronic thermal), servo motor overheat protection, encoder error protection, regenerative error protection, undervoltage protection, instantaneous power failure protection, overspeed protection, error excessive protection, magnetic pole detection protection, linear servo control fault protection								
	MR-J5-B4-LL		Overcurrent shut-off, regenerative overvoltage shut-off, overload shut-off (electronic thermal), servo motor overheat protection, encoder error protection, regenerative error protection, undervoltage protection, instantaneous power failure protection, overspeed protection, error excessive protection								
Safety sub-function, Safety performance			Refer to "Safety Sub-Functions" in section 1 of this catalog.								
Structure (IP rating)			Natural cooling, open (IP20)		Force cooling, open (IP20)				Force cooling, open (IP20) (Note 7, 11)		
Close mounting			Not possible								
Mass		[kg]	1.6		2.2	2.3	5.2	5.4	12.7		18.1

Notes:
1. Rated output and speed of a rotary servo motor are applicable when the servo amplifier is operated within the specified power supply voltage and frequency.
2. Select the most suitable regenerative option for your system with our Drive System Sizing Software Motorizer.
3. Refer to "Regenerative Option" in this catalog for the permissible regenerative power [W] when a regenerative option is used.
4. When using the dynamic brake, refer to "MR-J5 User's Manual" for the permissible load to motor inertia ratio.
5. The communication cycle depends on the controller specifications and the number of axes connected.
6. Use an external dynamic brake with the 12 kW or larger servo amplifiers. Failure to do so will cause an accident because the servo motor does not stop immediately but coasts at emergency stop. Ensure the safety in the entire equipment.
7. This product is certified as IP00.
8. The external dynamic brake cannot be used to comply with the SEMI-F47 standard. Do not assign DB (Dynamic brake interlock) to the output device. If DB (Dynamic brake interlock) is assigned, the servo amplifier switches to servo-off status when an instantaneous power failure occurs.
9. The values in brackets are applicable when cooling fans (two units of 92 mm × 92 mm, minimum air flow: 1.0 m^3/min) are installed, and then [Pr. PA02] is changed.
10. Servo amplifiers without an enclosed regenerative resistor are also available. Refer to "Model Designation for 1-Axis Servo Amplifier" in this catalog for details.
11. Terminal blocks are excluded.

MR-J5-B_Standard Wiring Diagram Example

B B-RJ

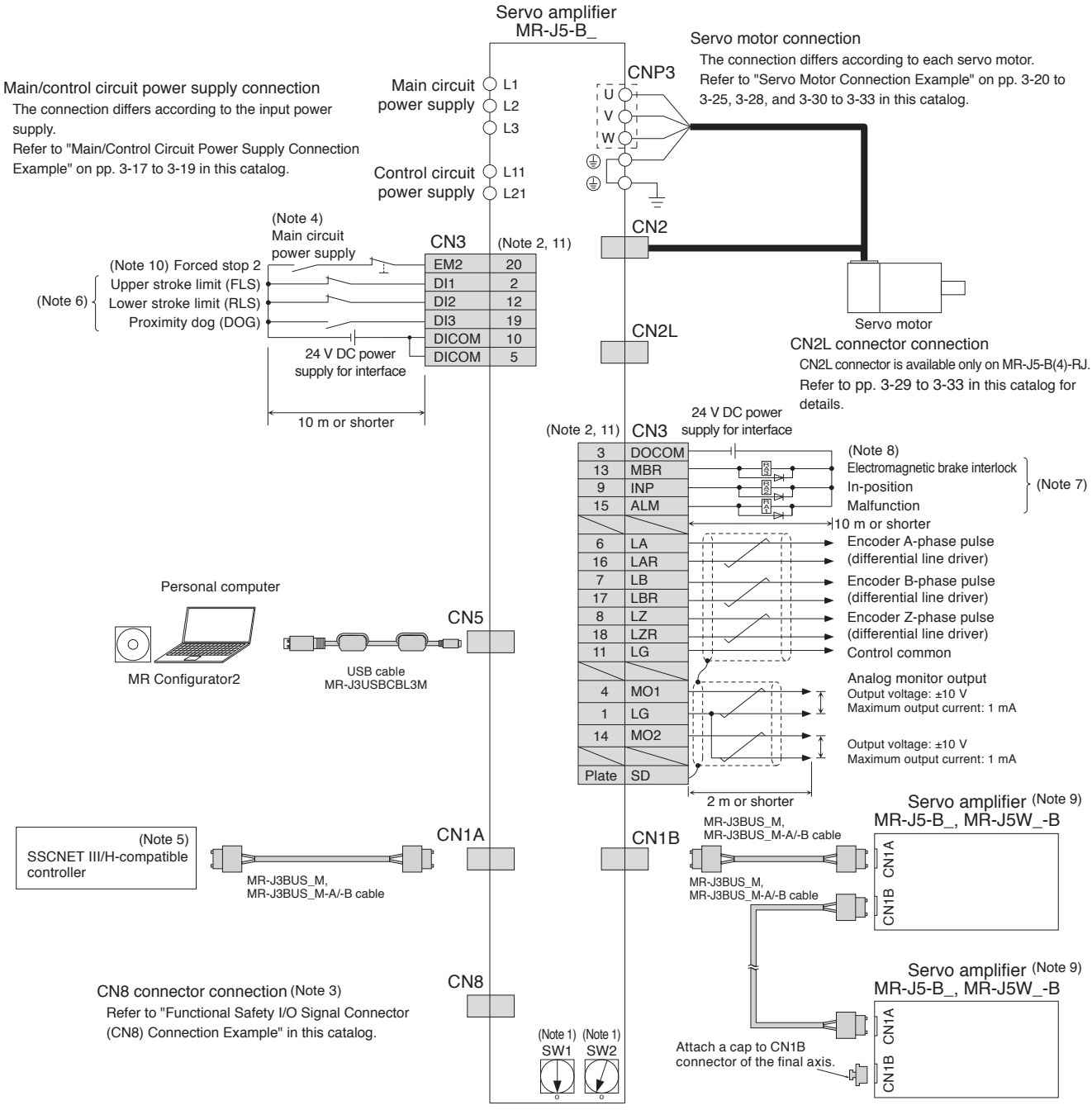

Notes:
1. Up to 64 axes can be set with a combination of rotary switches (SW1 and SW2). Note that the number of the connectable axes depends on the controller specifications.
2. This is for sink wiring. Source wiring is also possible.
3. Attach a short-circuit connector supplied with the servo amplifier when the functional safety (STO function) is not used.
4. To prevent an unexpected restart of the servo amplifier, create a circuit to turn off EM2 (Forced stop 2) when the main circuit power is turned off.
5. For details such as the servo system controller settings, refer to the controller manuals.
6. Devices can be assigned to DI1, DI2 and DI3 with servo system controller setting. Refer to the controller manuals for details on setting.
7. Devices for these pins can be changed with [Pr. PD07], [Pr. PD08], and [Pr. PD09].
8. When using a linear servo motor or direct drive motor, use MBR (Electromagnetic brake interlock) for an external brake mechanism.
9. Connections for the second and following axes are omitted.
10. The forced stop signal is issued for the servo amplifier. For overall system, apply the emergency stop on the controller side.
11. The frame of the CN3 connector is not connected to the protective earth (PE) terminal. Using a cable clamp fitting (AERSBAN-_SET) or shield connection clamp (SCC 15-F) for grounding is recommended as necessary. For details of AERSBAN-_SET and SCC 15-F, refer to "MR-J5 User's Manual".

Be sure to read through User's Manual for the actual wiring and use. Use the equipment after you have a full knowledge of the equipment, safety information and instructions.

MR-J5-B_ Dimensions

B B-RJ

●MR-J5-10B, MR-J5-10B-RJ

●MR-J5-20B, MR-J5-20B-RJ

●MR-J5-40B, MR-J5-40B-RJ

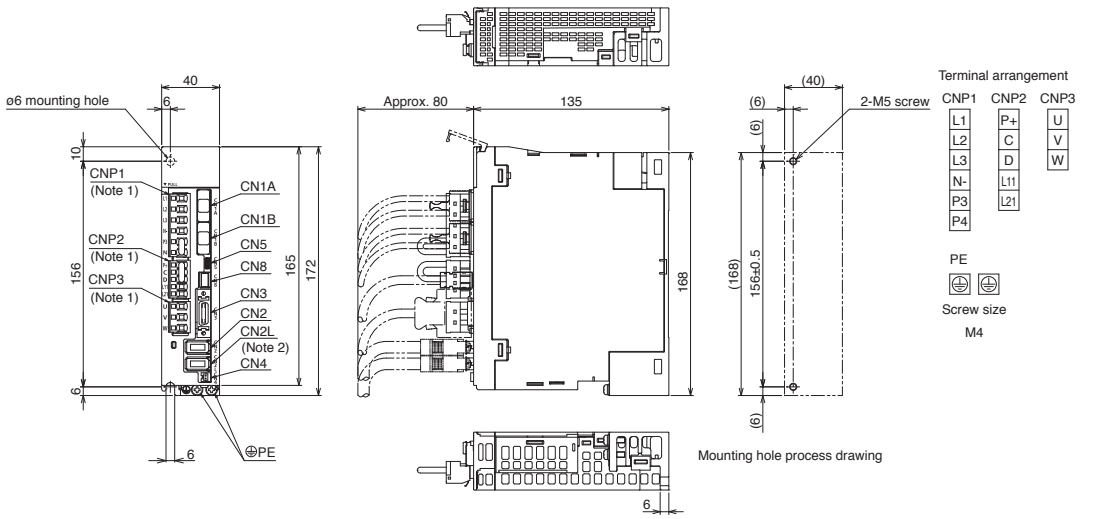

[Unit: mm]

●MR-J5-60B, MR-J5-60B-RJ

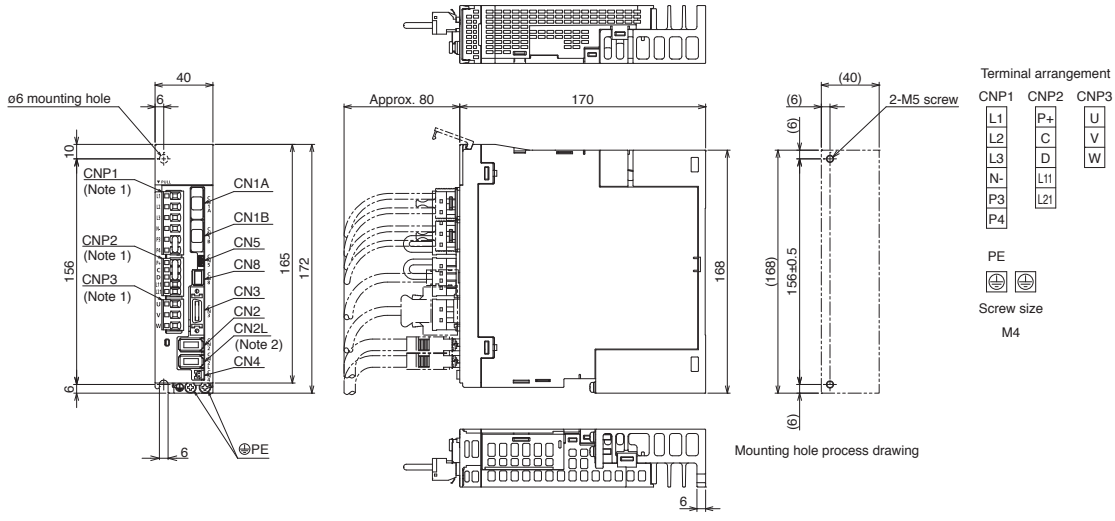

[Unit: mm]

Notes: 1. CNP1, CNP2, and CNP3 connectors are supplied with the servo amplifier.
2. CN2L connector is not available for MR-J5-B servo amplifiers.

MR-J5-B_ Dimensions

B B-RJ

●MR-J5-70B, MR-J5-70B-RJ

●MR-J5-100B, MR-J5-100B-RJ

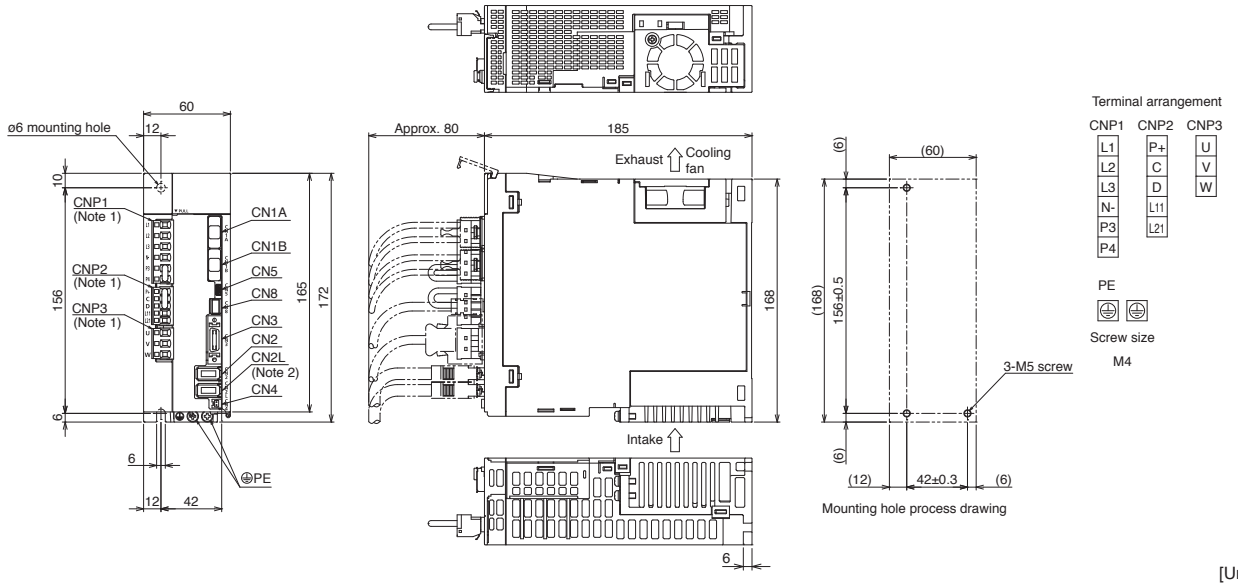

[Unit: mm]

●MR-J5-200B, MR-J5-200B-RJ (Note 3)

●MR-J5-350B, MR-J5-350B-RJ (Note 3)

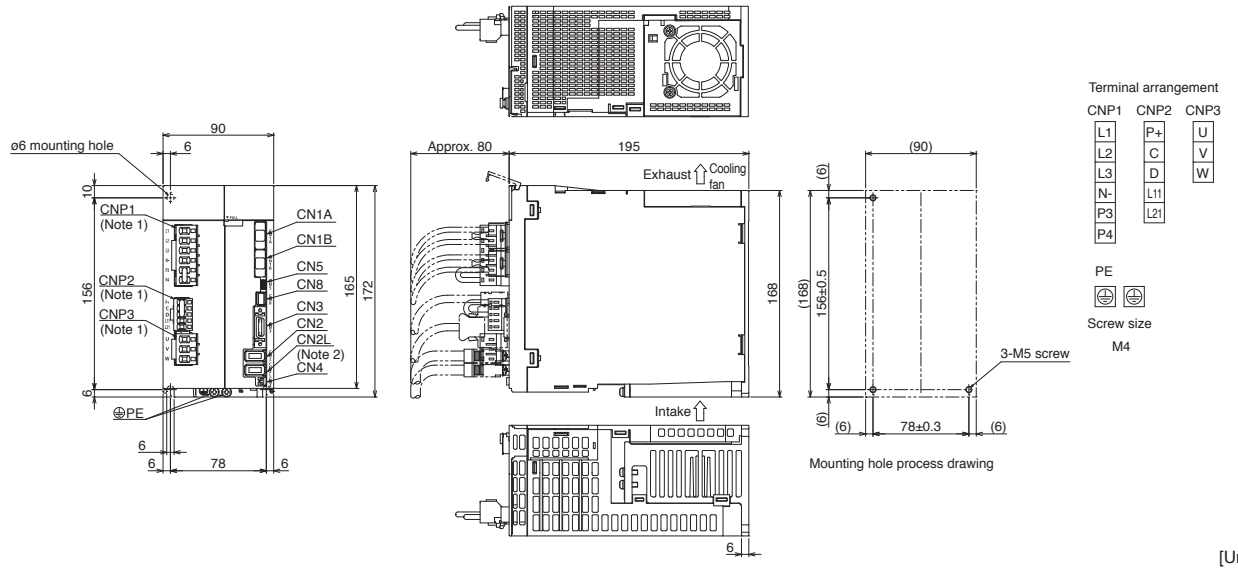

[Unit: mm]

Notes: 1. CNP1, CNP2, and CNP3 connectors are supplied with the servo amplifier.
2. CN2L connector is not available for MR-J5-B servo amplifiers.
3. For the servo amplifiers manufactured in August 2022 or later, the fan unit is mounted with two screws. Refer to "Mitsubishi Electric AC Servo System Sales and Service No. 22-02E" for details.

MR-J5-B_ Dimensions

B B-RJ

●MR-J5-500B, MR-J5-500B-RJ

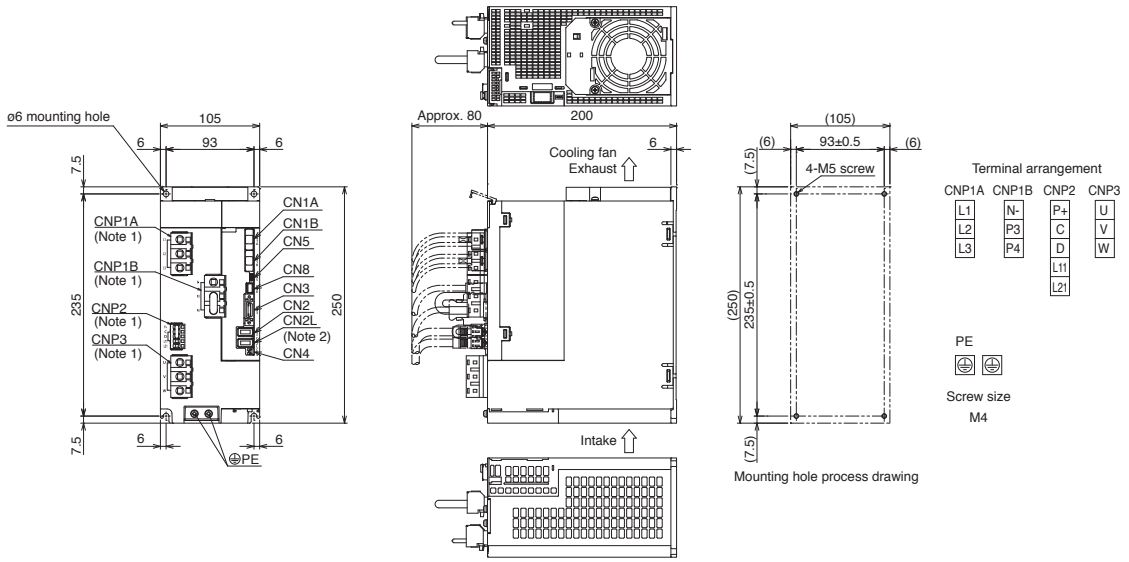

[Unit: mm]

●MR-J5-700B, MR-J5-700B-RJ

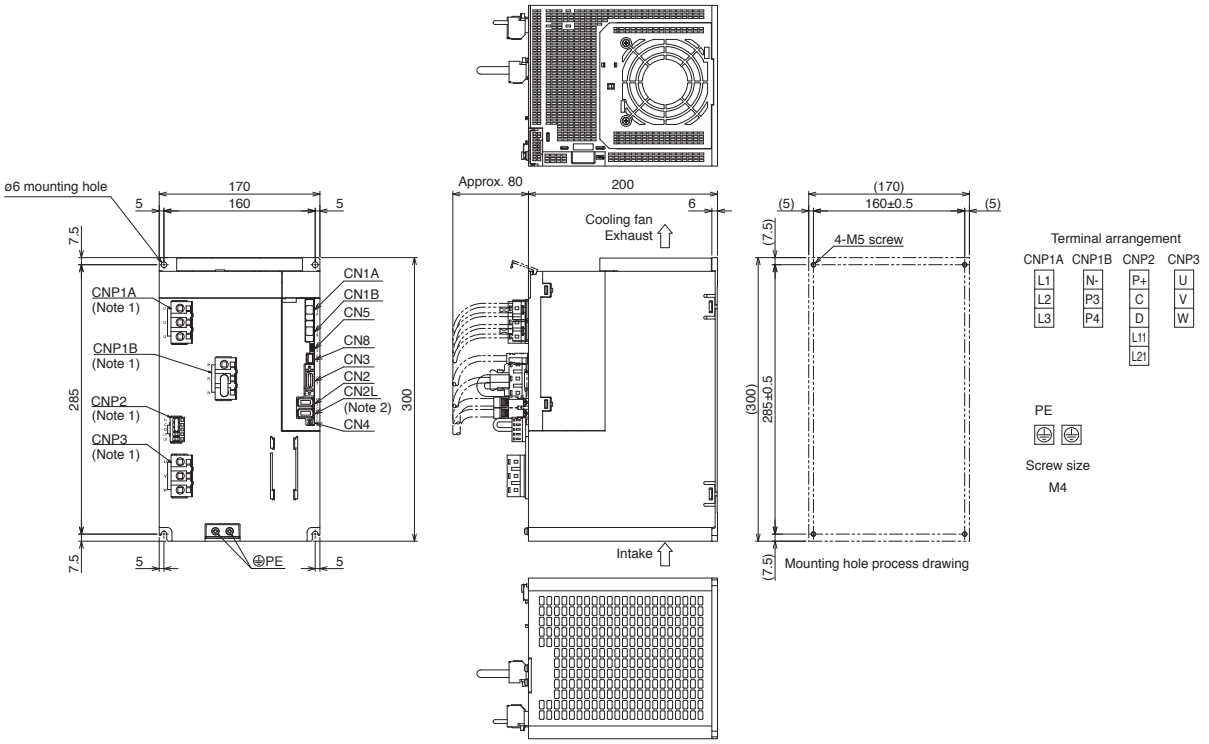

[Unit: mm]

Notes: 1. CNP1A, CNP1B, CNP2, and CNP3 connectors are supplied with the servo amplifier.
2. CN2L connector is not available for MR-J5-B servo amplifiers.

MR-J5-B_ Dimensions

B B-RJ

●MR-J5-60B4, MR-J5-60B4-RJ

●MR-J5-100B4, MR-J5-100B4-RJ

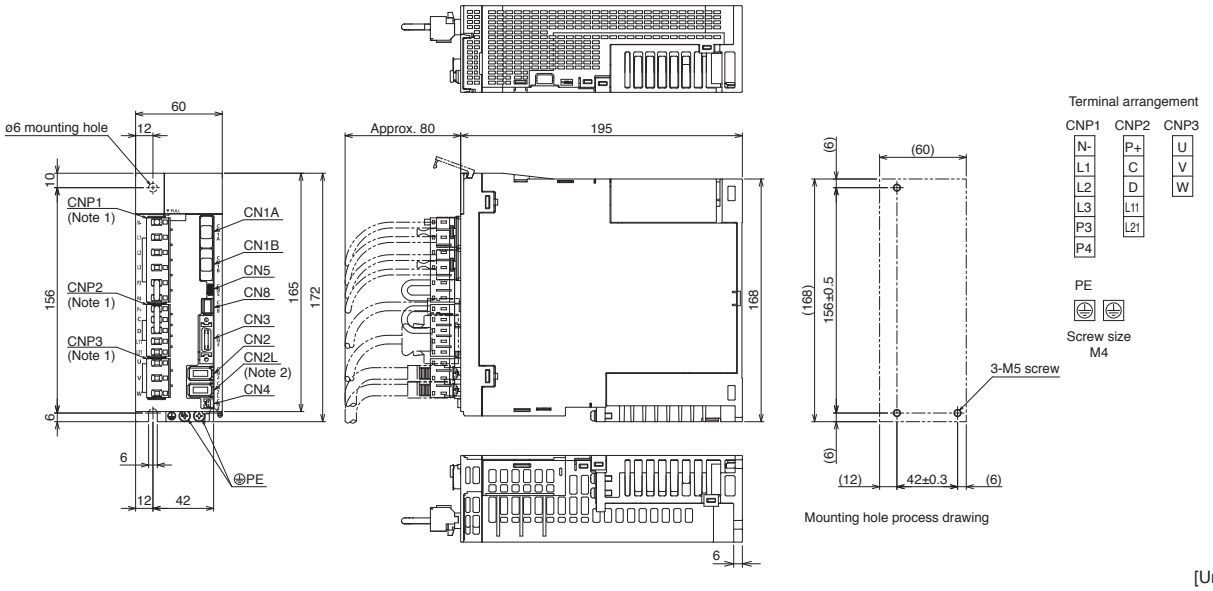

[Unit: mm]

●MR-J5-200B4, MR-J5-200B4-RJ (Note 3)

●MR-J5-350B4, MR-J5-350B4-RJ (Note 3)

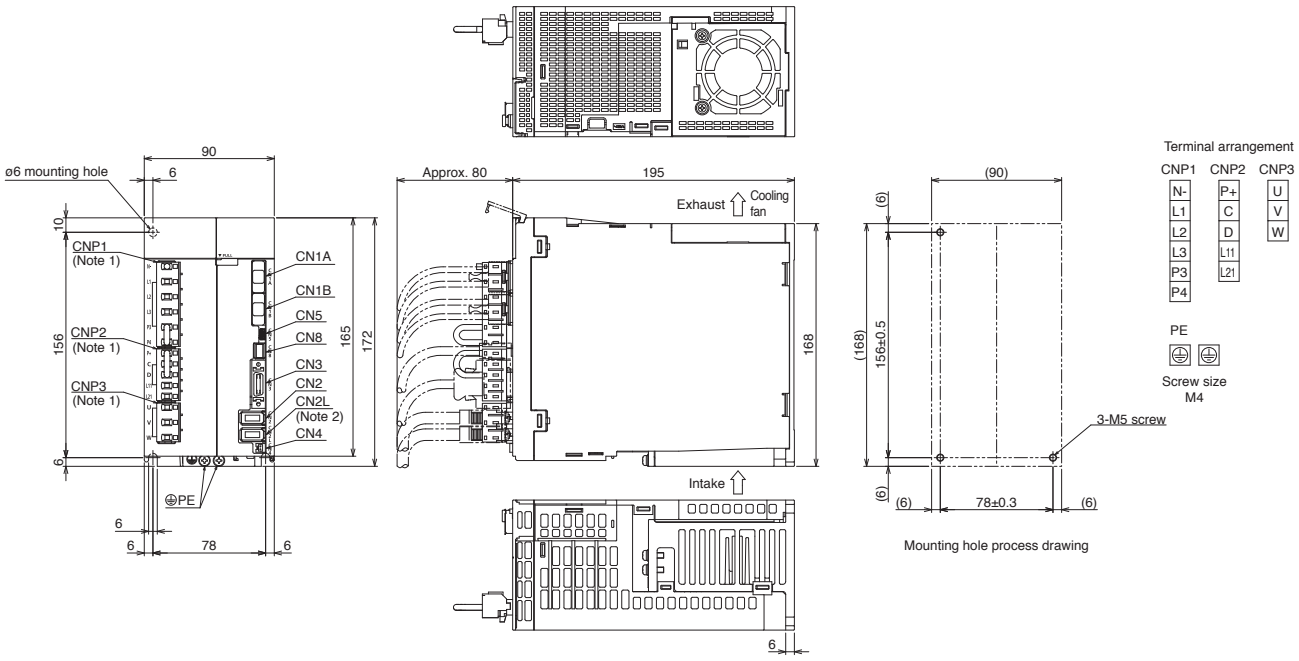

[Unit: mm]

Notes: 1. CNP1, CNP2, and CNP3 connectors are supplied with the servo amplifier.
2. CN2L connector is not available for MR-J5-B4 servo amplifiers.
3. For the servo amplifiers manufactured in August 2022 or later, the fan unit is mounted with two screws. Refer to "Mitsubishi Electric AC Servo System Sales and Service No. 22-02E" for details.

MR-J5-B_ Dimensions

B B-RJ

●MR-J5-500B4, MR-J5-500B4-RJ

●MR-J5-700B4, MR-J5-700B4-RJ

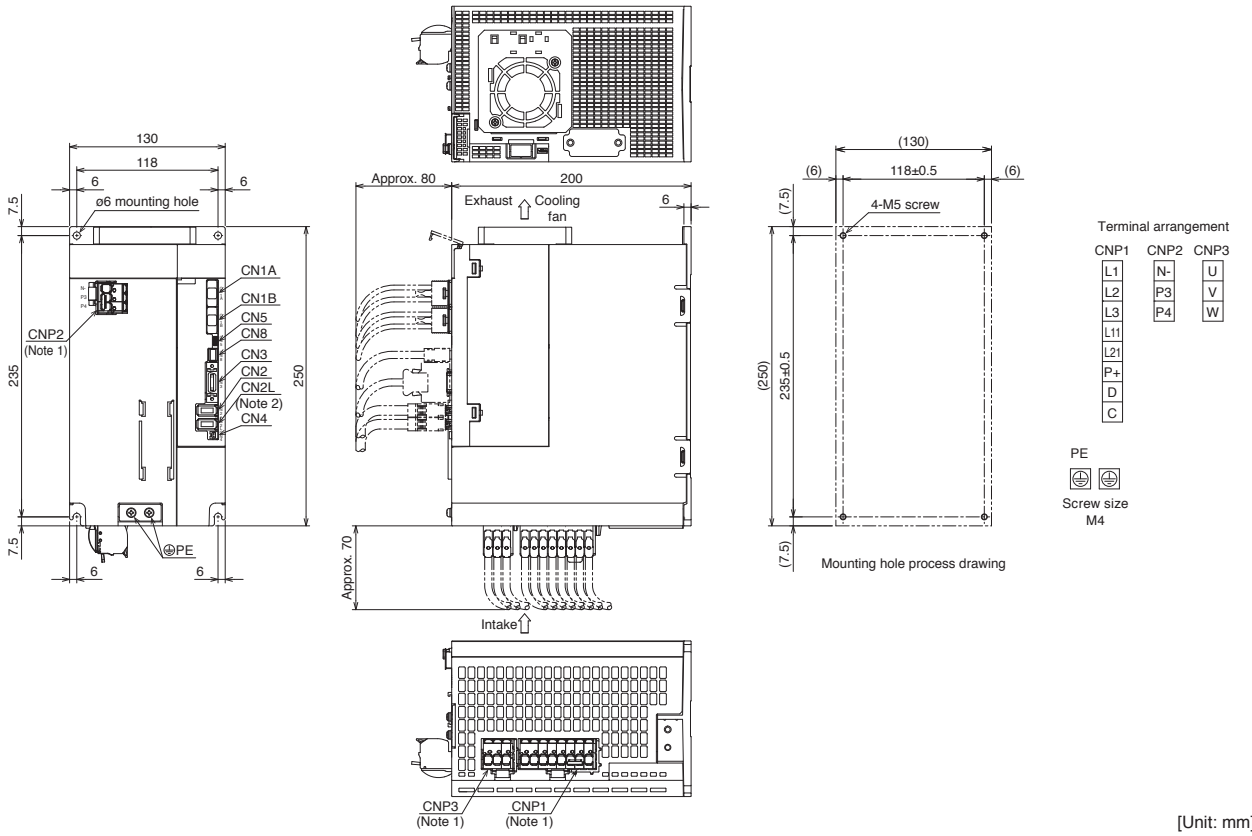

[Unit: mm]

●MR-J5-12KB(4)(-RJ), MR-J5-17KB(4)(-RJ)

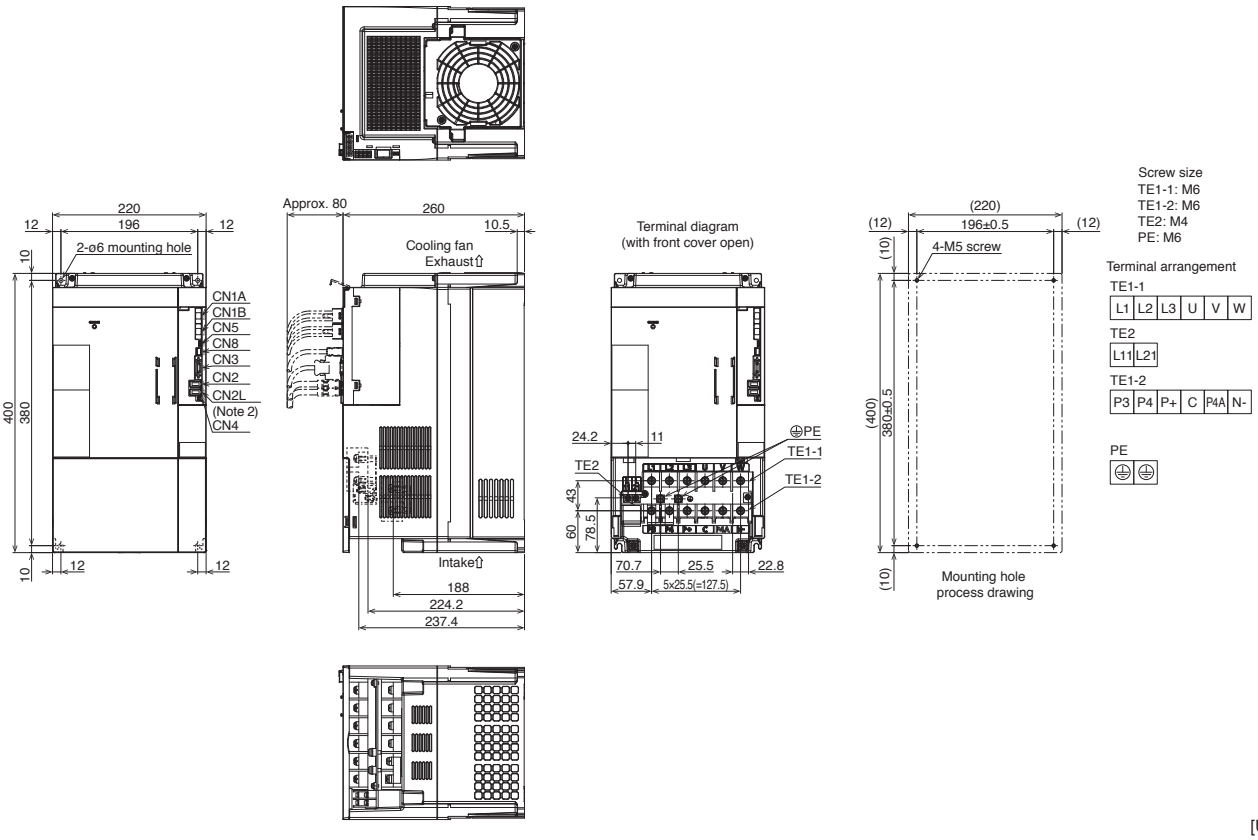

[Unit: mm]

Notes: 1. CNP1, CNP2, and CNP3 connectors are supplied with the servo amplifier.
2. CN2L connector is not available for MR-J5-B(4) servo amplifiers.

MR-J5-B_ Dimensions

B B-RJ

●MR-J5-25KB(4)(-RJ)

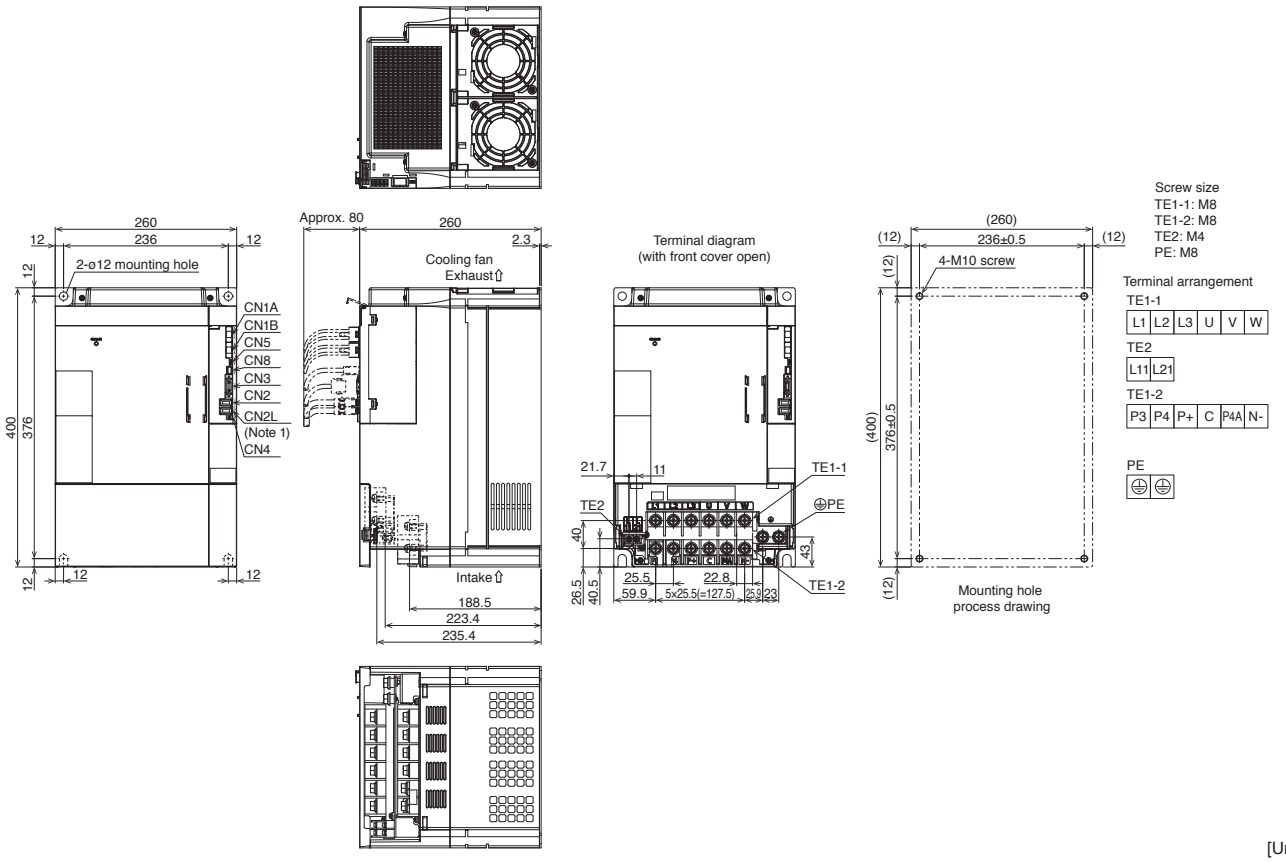

[Unit: mm]

Notes: 1. CN2L connector is not available for MR-J5-B(4) servo amplifiers.

MR-J5W_-B Connections with Peripheral Equipment (Note 1)

WB

Peripheral equipment is connected to MR-J5W_-B as described below. Connectors, cables, options, and other necessary equipment are available so that users can set up the servo amplifier easily and start using it right away.

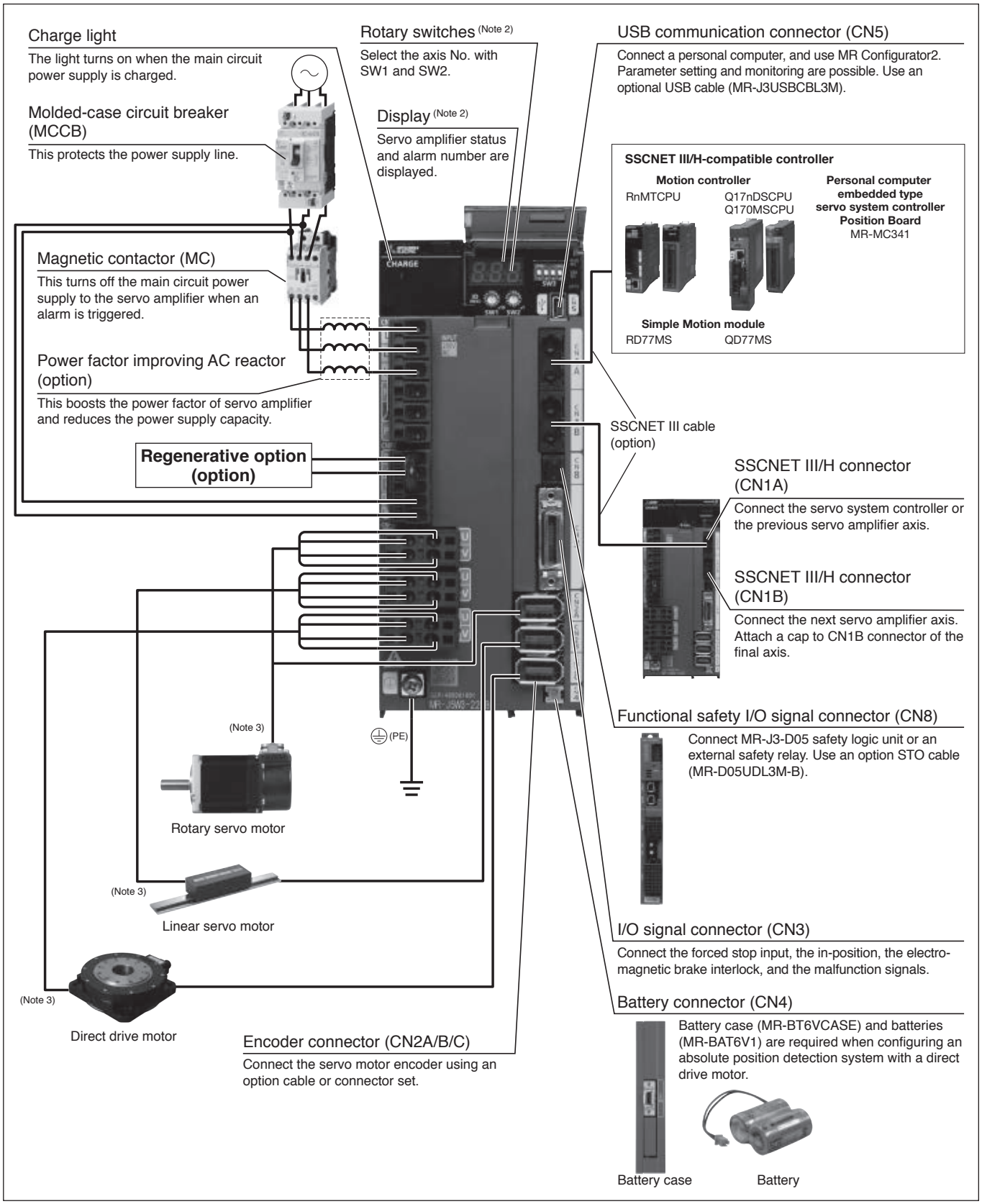

Notes: 1. The connection with the peripheral equipment is an example for MR-J5W3-222B. CNP3C and CN2C connectors are not available on MR-J5W2-B. Refer to "MR-J5 User's Manual" for the actual connections of each multi-axis servo amplifier.
2. This picture shows the display cover open.
3. Connect the grounding wire to the cabinet protective earth (PE) terminal via the servo amplifier for grounding the servo motor.

MR-J5W2-B (2-Axis, SSCNET III/H) Specifications

WB

Servo amplifier model MR-J5W2-_			22B	44B	77B	1010B
Output	Voltage		3-phase 0 V AC to 240 V AC			
	Rated current (each axis) [A]		1.8	2.8	5.8	6.0
Main circuit power supply input	Voltage/ frequency (Note 1)	AC input	3-phase or 1-phase 200 V AC to 240 V AC, 50 Hz/60 Hz			3-phase 200 V AC to 240 V AC, 50 Hz/60 Hz
		DC input (Note 8)	283 V DC to 340 V DC			
	Rated current [A] (Note 6)	AC input	2.9 (5.0)	5.2 (9.0)	7.5 (13.0)	9.8
		DC input	3.5	6.4	9.2	12.0
	Permissible voltage fluctuation	AC input	3-phase or 1-phase 170 V AC to 264 V AC			3-phase 170 V AC to 264 V AC
		DC input (Note 8)	241 V DC to 374 V DC			
	Permissible frequency fluctuation		±5 % maximum			
Control circuit power supply input	Voltage/ frequency	AC input	1-phase 200 V AC to 240 V AC, 50 Hz/60 Hz			
		DC input (Note 8)	283 V DC to 340 V DC			
	Rated current [A]		0.4			
	Permissible voltage fluctuation	AC input	1-phase 170 V AC to 264 V AC			
		DC input (Note 8)	241 V DC to 374 V DC			
	Permissible frequency fluctuation		±5 % maximum			
	Power consumption [W]		55			
Interface power supply			24 V DC ± 10 % (required current capacity: 0.35 A (including CN8 connector signals))			
Control method			Sine-wave PWM control/current control method			
Permissible regenerative power of the built-in regenerative resistor (Note 2, 3) [W]			20		100	
Dynamic brake (Note 4)			Built-in			
SSCNET III/H	Communication cycle (Note 5)		0.222 ms, 0.444 ms, 0.888 ms			
Communication function	USB		Connect a personal computer (MR Configurator2 compatible)			
Encoder output pulse			Compatible (A/B-phase pulse)			
Analog monitor			Not supported			
Fully closed loop control			Supported			
Scale measurement function			Supported			
Load-side encoder interface (Note 9)			Mitsubishi Electric high-speed serial communication			
Servo functions			Advanced vibration suppression control II, adaptive filter II, robust filter, quick tuning, auto tuning, one-touch tuning, tough drive function, drive recorder function, machine diagnosis function (including failure prediction), power monitoring function, lost motion compensation function, super trace control, continuous operation to torque control mode			
Protective functions			Overcurrent shut-off, regenerative overvoltage shut-off, overload shut-off (electronic thermal), servo motor overheat protection, encoder error protection, regenerative error protection, undervoltage protection, instantaneous power failure protection, overspeed protection, error excessive protection, magnetic pole detection protection, linear servo control fault protection			
Safety sub-function, Safety performance			Refer to "Safety Sub-Functions" in section 1 of this catalog.			
Structure (IP rating)			Natural cooling, open (IP20)	Force cooling, open (IP20)		
Close mounting			Possible (Note 7)			
Mass [kg]			1.5		1.9	

Notes:
1. Rated output and speed of a rotary servo motor and a direct drive motor; and continuous thrust and maximum speed of a linear servo motor are applicable when the servo amplifier is operated within the specified power supply voltage and frequency.
2. Select the most suitable regenerative option for your system with our Drive System Sizing Software Motorizer.
3. Refer to "Regenerative Option" in this catalog for the permissible regenerative power [W] when a regenerative option is used.
4. When using the dynamic brake, refer to "MR-J5 User's Manual" for the permissible load to motor inertia ratio and the permissible load to mass ratio.
5. The communication cycle depends on the controller specifications and the number of axes connected.
6. The values in brackets are the rated current for the 1-phase power supply input.
7. When the servo amplifiers are closely mounted, keep the ambient temperature within 0 °C to 45 °C, or use the servo amplifiers at 75 % or less of the effective load ratio.
8. For a connection example of power supply circuit with DC input, refer to "MR-J5 User's Manual".
9. Not compatible with pulse train interface (A/B/Z-phase differential output type).

MR-J5W3-B (3-Axis, SSCNET III/H) Specifications

WB

Servo amplifier model MR-J5W3-_			222B	444B
Output	Voltage		3-phase 0 V AC to 240 V AC	
	Rated current (each axis) [A]		1.8	2.8
Main circuit power supply input	Voltage/ frequency (Note 1)	AC input	3-phase or 1-phase 200 V AC to 240 V AC, 50 Hz/60 Hz	
		DC input (Note 8)	283 V DC to 340 V DC	
	Rated current [A] (Note 6)	AC input	4.3 (7.5)	7.8 (13.5)
		DC input	5.3	9.5
	Permissible voltage fluctuation	AC input	3-phase or 1-phase 170 V AC to 264 V AC	
		DC input (Note 8)	241 V DC to 374 V DC	
	Permissible frequency fluctuation		±5 % maximum	
Control circuit power supply input	Voltage/ frequency	AC input	1-phase 200 V AC to 240 V AC, 50 Hz/60 Hz	
		DC input (Note 8)	283 V DC to 340 V DC	
	Rated current [A]		0.4	
	Permissible voltage fluctuation	AC input	1-phase 170 V AC to 264 V AC	
		DC input (Note 8)	241 V DC to 374 V DC	
	Permissible frequency fluctuation		±5 % maximum	
	Power consumption [W]		55	
Interface power supply			24 V DC ± 10 % (required current capacity: 0.45 A (including CN8 connector signals))	
Control method			Sine-wave PWM control/current control method	
Permissible regenerative power of the built-in regenerative resistor (Note 2, 3) [W]			30	
Dynamic brake (Note 4)			Built-in	
SSCNET III/H	Communication cycle (Note 5)		0.222 ms, 0.444 ms, 0.888 ms	
Communication function	USB		Connect a personal computer (MR Configurator2 compatible)	
Encoder output pulse			Compatible only with A-axis and B-axis (A/B-phase pulse)	
Analog monitor			Not supported	
Fully closed loop control			Not supported	
Scale measurement function			Not supported	
Servo functions			Advanced vibration suppression control II, adaptive filter II, robust filter, quick tuning, auto tuning, one-touch tuning, tough drive function, drive recorder function, machine diagnosis function (including failure prediction), power monitoring function, lost motion compensation function, super trace control, continuous operation to torque control mode	
Protective functions			Overcurrent shut-off, regenerative overvoltage shut-off, overload shut-off (electronic thermal), servo motor overheat protection, encoder error protection, regenerative error protection, undervoltage protection, instantaneous power failure protection, overspeed protection, error excessive protection, magnetic pole detection protection, linear servo control fault protection	
Safety sub-function, Safety performance			Refer to "Safety Sub-Functions" in section 1 of this catalog.	
Structure (IP rating)			Force cooling, open (IP20)	
Close mounting			Possible (Note 7)	
Mass [kg]			1.8	

Notes:
1. Rated output and speed of a rotary servo motor and a direct drive motor; and continuous thrust and maximum speed of a linear servo motor are applicable when the servo amplifier is operated within the specified power supply voltage and frequency.
2. Select the most suitable regenerative option for your system with our Drive System Sizing Software Motorizer.
3. Refer to "Regenerative Option" in this catalog for the permissible regenerative power [W] when a regenerative option is used.
4. When using the dynamic brake, refer to "MR-J5 User's Manual" for the permissible load to motor inertia ratio and the permissible load to mass ratio.
5. The communication cycle depends on the controller specifications and the number of axes connected.
6. The values in brackets are the rated current for the 1-phase power supply input.
7. When the servo amplifiers are closely mounted, keep the ambient temperature within 0 °C to 45 °C, or use the servo amplifiers at 75 % or less of the effective load ratio.
8. For a connection example of power supply circuit with DC input, refer to "MR-J5 User's Manual".

MR-J5W2-B Standard Wiring Diagram Example

WB

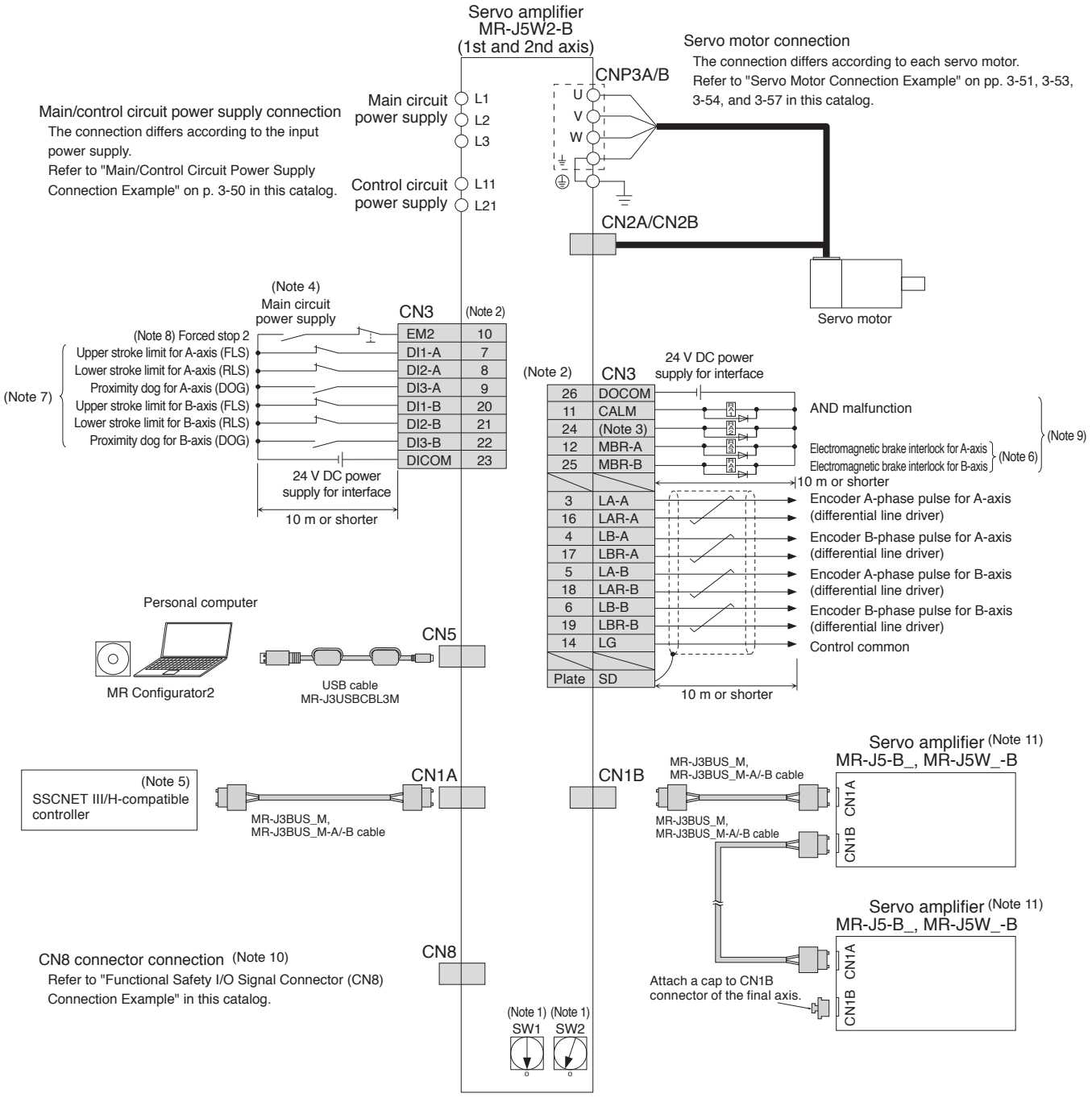

Notes:
1. Up to 64 axes can be set with a combination of rotary switches (SW1 and SW2). Note that the number of the connectable axes depends on the controller specifications.
2. This is for sink wiring. Source wiring is also possible.
3. CINP (AND in-position) is assigned to this pin as default. A device for this pin can be changed with [Pr. PD08].
4. To prevent an unexpected restart of the servo amplifier, create a circuit to turn off EM2 (Forced stop 2) when the main circuit power is turned off.
5. For details such as the servo system controller settings, refer to the controller manuals.
6. When using a linear servo motor or direct drive motor, use MBR (Electromagnetic brake interlock) for an external brake mechanism.
7. Devices can be assigned to these signals with the controller setting. Refer to the controller manuals for details on setting.
8. The forced stop signal is issued for two axes of the servo amplifier. For overall system, apply the emergency stop on the controller side.
9. Devices for these pins can be changed with [Pr. PD07] and [Pr. PD09].
10. Attach a short-circuit connector supplied with the servo amplifier when the functional safety (STO function) is not used.
11. Connections for the third and following axes are omitted.

Be sure to read through User's Manual for the actual wiring and use. Use the equipment after you have a full knowledge of the equipment, safety information and instructions.

MR-J5W3-B Standard Wiring Diagram Example

WB

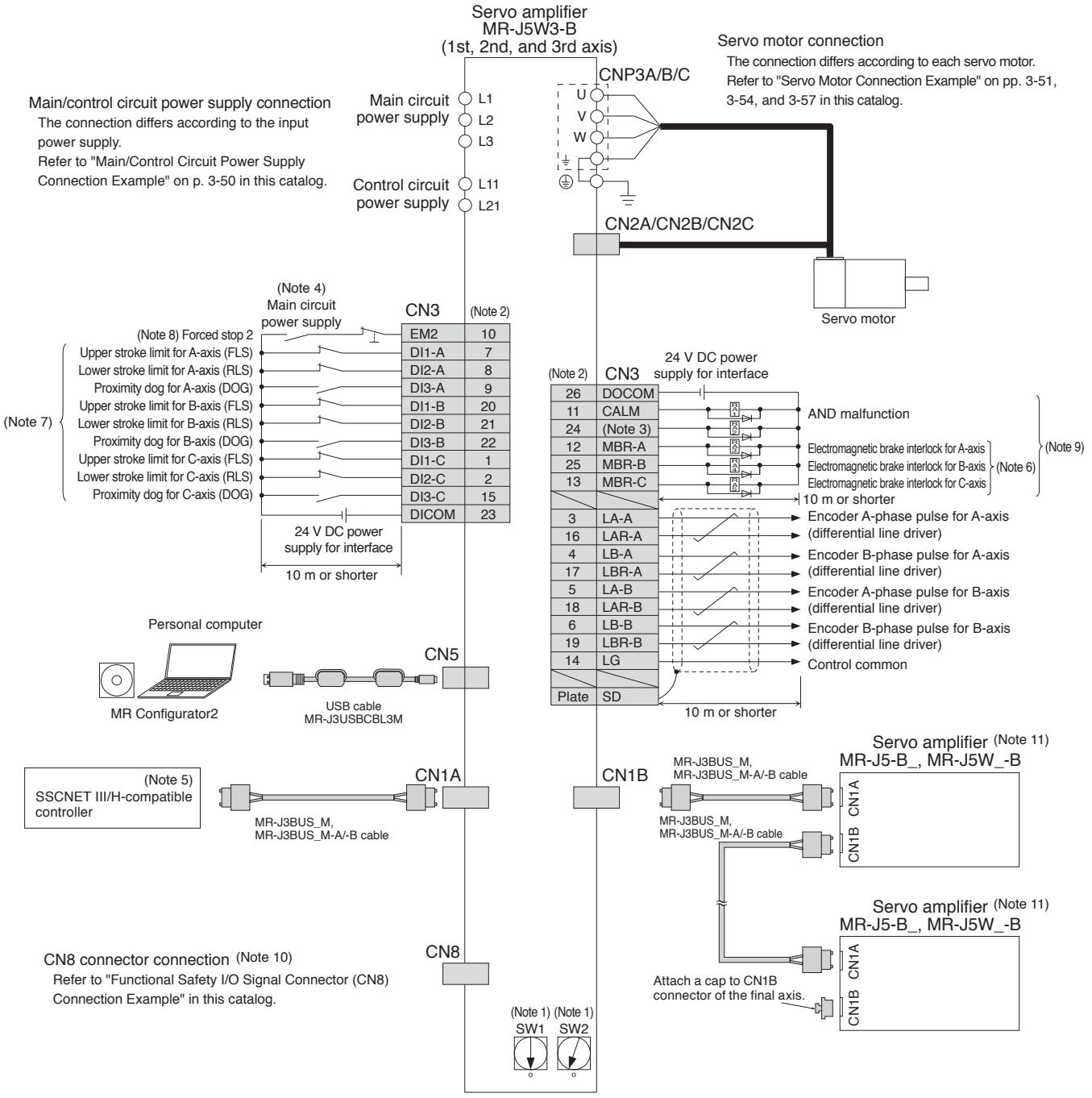

Notes:
1. Up to 64 axes can be set with a combination of rotary switches (SW1 and SW2). Note that the number of the connectable axes depends on the controller specifications.
2. This is for sink wiring. Source wiring is also possible.
3. CINP (AND in-position) is assigned to this pin as default. A device for this pin can be changed with [Pr. PD08].
4. To prevent an unexpected restart of the servo amplifier, create a circuit to turn off EM2 (Forced stop 2) when the main circuit power is turned off.
5. For details such as the servo system controller settings, refer to the controller manuals.
6. When using a linear servo motor or direct drive motor, use MBR (Electromagnetic brake interlock) for an external brake mechanism.
7. Devices can be assigned to these signals with the controller setting. Refer to the controller manuals for details on setting.
8. The forced stop signal is issued for three axes of the servo amplifier. For overall system, apply the emergency stop on the controller side.
9. Devices for these pins can be changed with [Pr. PD07] and [Pr. PD09].
10. Attach a short-circuit connector supplied with the servo amplifier when the functional safety (STO function) is not used.
11. Connections for the fourth and following axes are omitted.

Be sure to read through User's Manual for the actual wiring and use. Use the equipment after you have a full knowledge of the equipment, safety information and instructions.

MR-J5W2-B Dimensions

WB

●MR-J5W2-22B

●MR-J5W2-44B

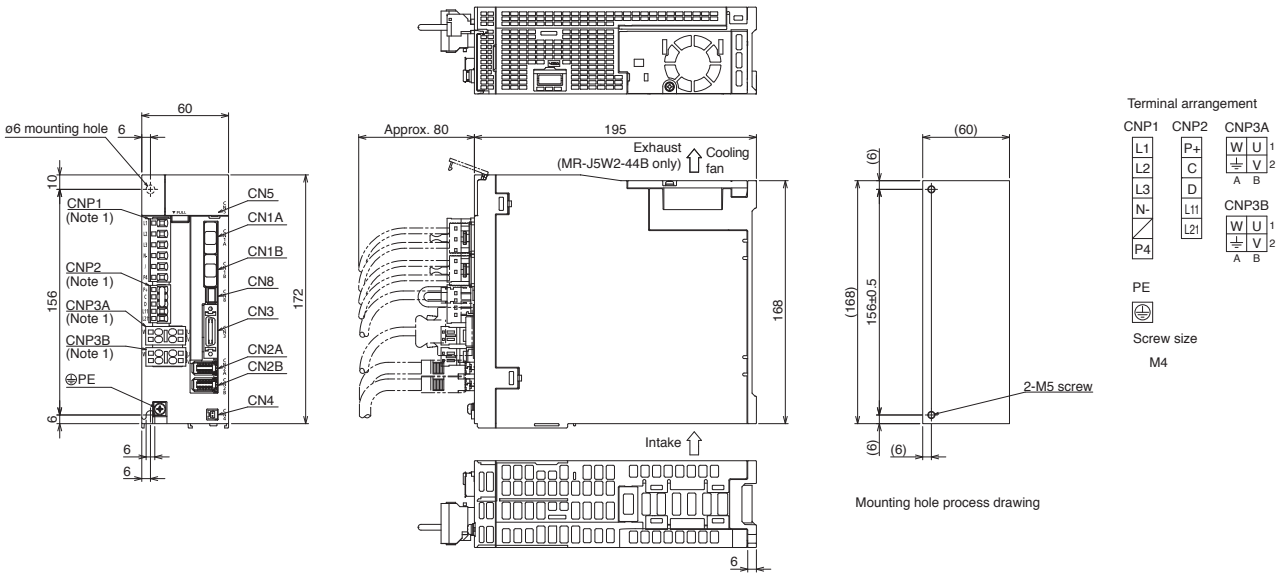

[Unit: mm]

●MR-J5W2-77B

●MR-J5W2-1010B

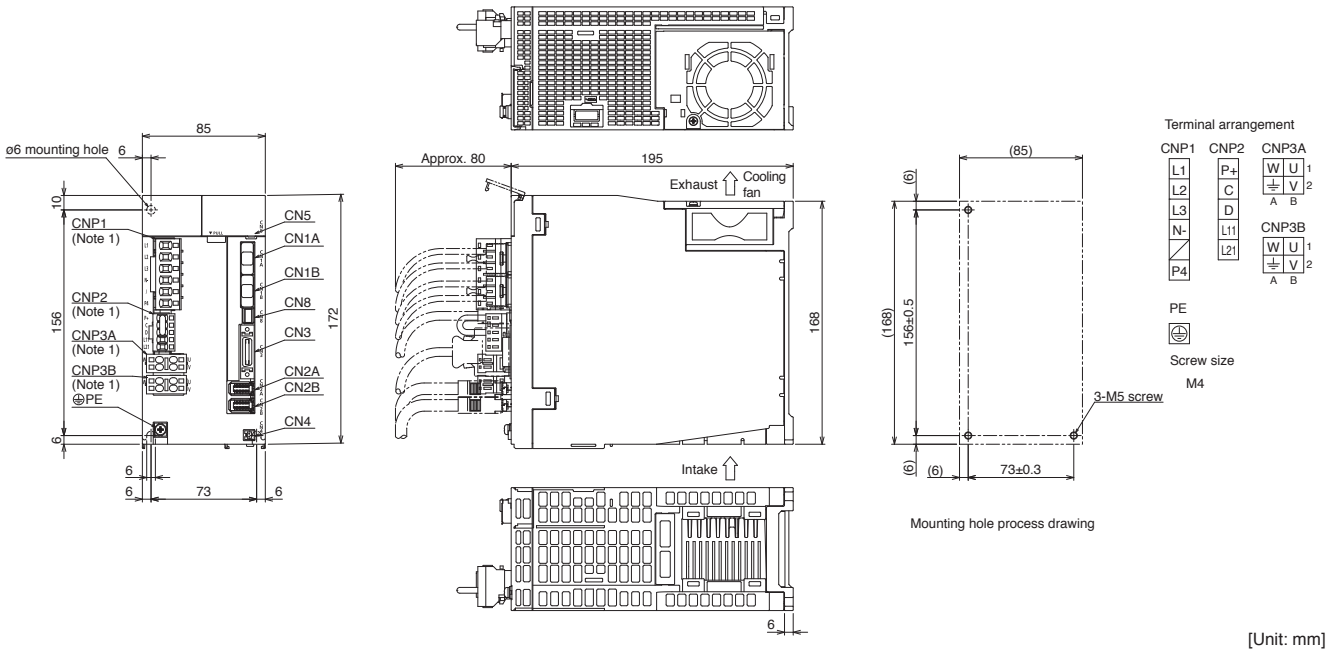

[Unit: mm]

Notes: 1. CNP1, CNP2, CNP3A, and CNP3B connectors are supplied with the servo amplifier.

MR-J5W3-B Dimensions

WB

●MR-J5W3-222B

●MR-J5W3-444B

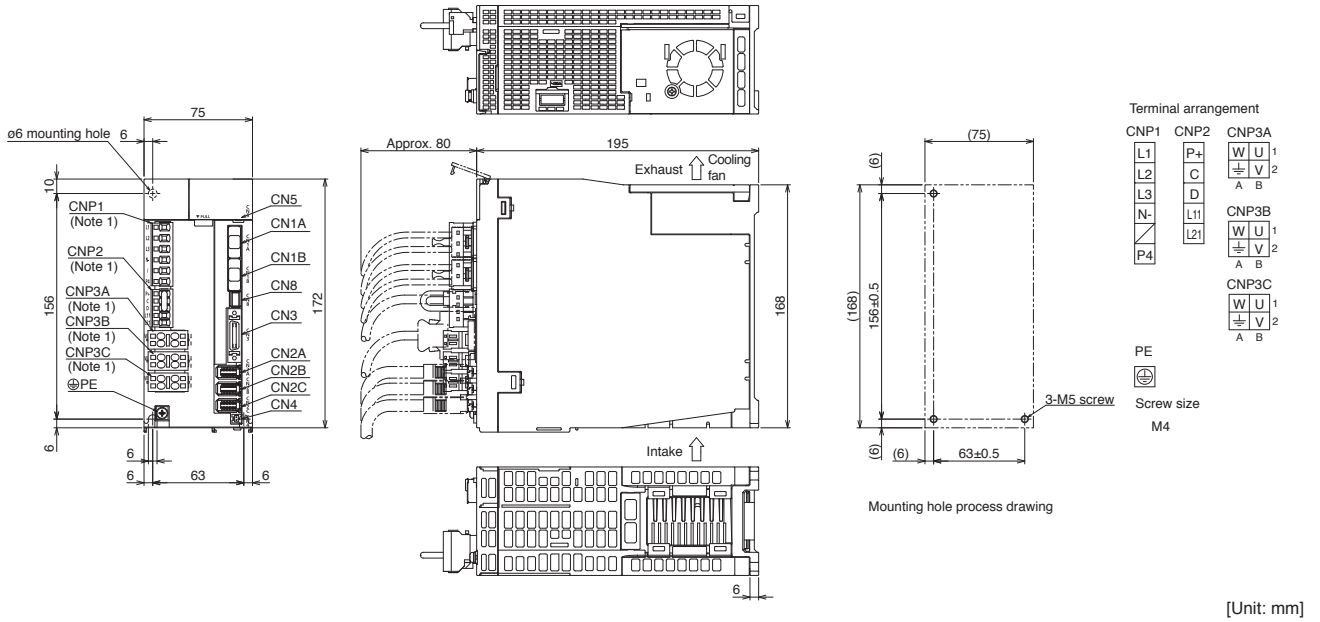

[Unit: mm]

Notes: 1. CNP1, CNP2, CNP3A, CNP3B, and CNP3C connectors are supplied with the servo amplifier.

MR-J5-A_ Connections with Peripheral Equipment (Note 1)

A A-RJ

Peripheral equipment is connected to MR-J5-A_ as described below. Connectors, cables, options, and other necessary equipment are available so that users can set up the servo amplifier easily and start using it right away.

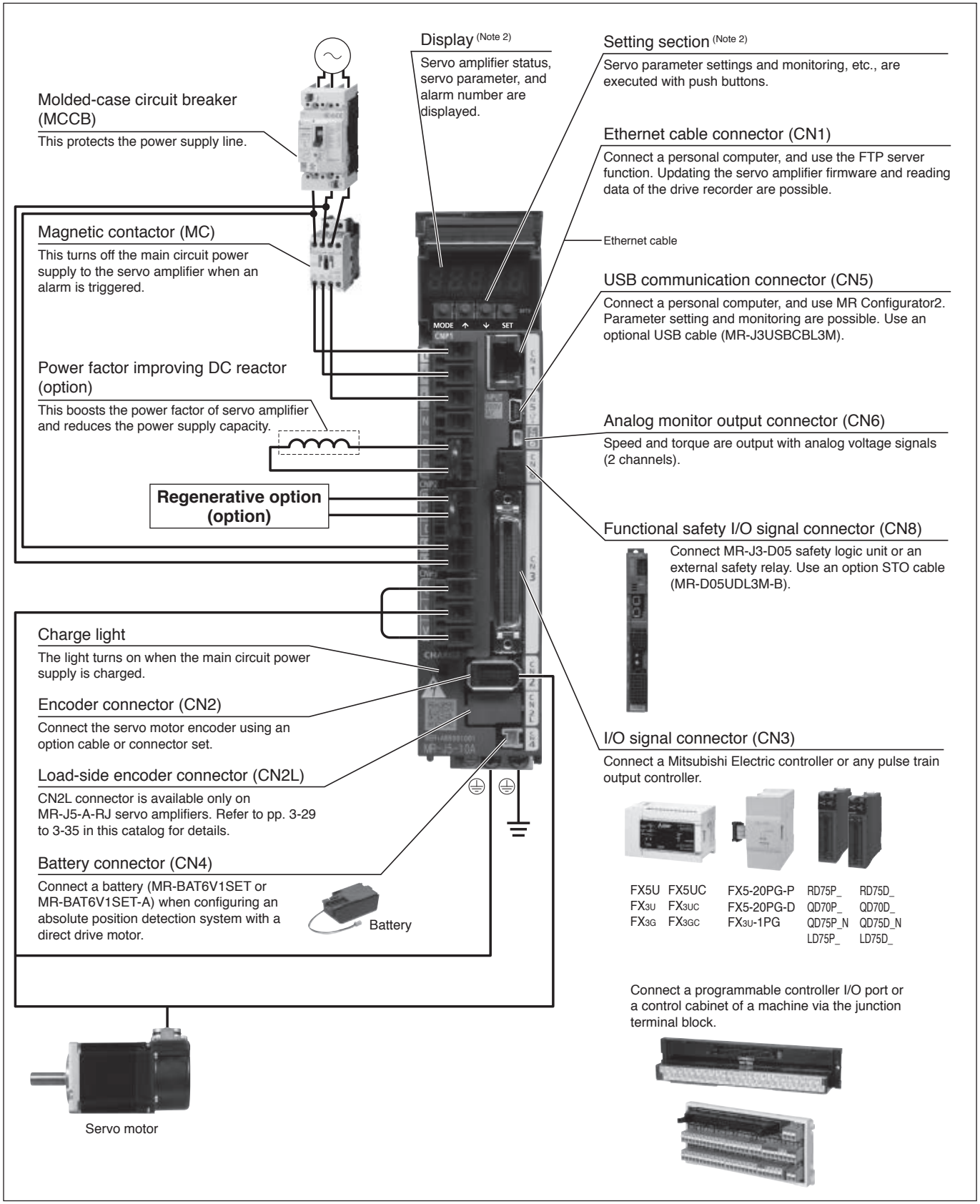

Notes: 1. The connection with the peripheral equipment is an example for MR-J5-350A(4)(-RJ) or smaller servo amplifiers. Refer to "MR-J5 User's Manual" for the actual connections.
2. This picture shows the display cover open.

MR-J5-A_ (General-Purpose Interface) Specifications (200 V)

A A-RJ

Servo amplifier model MR-J5-_(-RJ)			10A	20A	40A	60A	70A	100A	200A	350A	500A	700A	12KA	17KA	25KA
Output	Voltage		3-phase 0 V AC to 240 V AC												
	Rated current	[A]	1.3	1.8	2.8	3.2	5.8	6.0	11.0	17.0	28.0	37.0	68.0	87.0	126.0
Main circuit power supply input	Voltage/ frequency (Note 1)	AC input	3-phase or 1-phase 200 V AC to 240 V AC, 50 Hz/60 Hz					3-phase or 1-phase 200 V AC to 240 V AC, 50 Hz/60 Hz (Note 7)		3-phase 200 V AC to 240 V AC, 50 Hz/60 Hz					
		DC input (Note 8)	283 V DC to 340 V DC												
	Rated current [A] (Note 6)	AC input	0.9 (1.5)	1.5 (2.5)	2.6 (4.5)	3.2 (5.0)	3.8 (6.5)	5.0 (10.5)	10.5 (15.8)	16.0	21.7	28.9	52.0	72.2	109.7
		DC input	1.1	1.8	3.2	3.5	4.6	6.0	12.4	19.4	26.5	38.9	63.6	77.7	132.9
	Permissible voltage fluctuation	AC input	3-phase or 1-phase 170 V AC to 264 V AC					3-phase or 1-phase 170 V AC to 264 V AC (Note 7)		3-phase 170 V AC to 264 V AC					
		DC input (Note 8)	241 V DC to 374 V DC												
	Permissible frequency fluctuation		±5 % maximum												
Control circuit power supply input	Voltage/ frequency	AC input	1-phase 200 V AC to 240 V AC, 50 Hz/60 Hz												
		DC input (Note 8)	283 V DC to 340 V DC												
	Rated current	[A]	0.2								0.3				
	Permissible voltage fluctuation	AC input	1-phase 170 V AC to 264 V AC												
		DC input (Note 8)	241 V DC to 374 V DC												
	Permissible frequency fluctuation		±5 % maximum												
	Power consumption	[W]	30										45		
Interface power supply			24 V DC ± 10 % (required current capacity: 0.5 A (including CN8 connector signals))												
Control method			Sine-wave PWM control/current control method												
Permissible regenerative power	Built-in regenerative resistor (Note 2, 3)	[W]	-	10			30		100		130	170	-		
	External regenerative resistor (standard accessory) (Note 2, 3, 14, 15)	[W]	-										500 (800)	850 (1300)	
Dynamic brake (Note 4)			Built-in										External option (Note 11, 13)		
Communication function		USB	Connect a personal computer (MR Configurator2 compatible)												
		RS-422/ RS-485	1:n communication (up to 32 axes)												
Encoder output pulse			Compatible (A/B/Z-phase pulse)												
Analog monitor			2 channels												
Position control mode	Maximum input pulse frequency		4 Mpulses/s (when using differential receiver), 200 kpulses/s (when using open collector)												
	Positioning feedback pulse		Encoder resolution: 26 bits												
	Command pulse multiplying factor		Electronic gear A/B multiple, A: 1 to 2147483647, B: 1 to 2147483647, 1/10 < A/B < 64000												
	In-position range setting		0 pulse to ±16777215 pulses (command pulse unit)												
	Error excessive		±3 rotations												
	Torque limit		Set by servo parameters or external analog input (0 V DC to +10 V DC/maximum torque)												
Speed control mode	Speed control range		Analog speed command 1:2000, internal speed command 1:5000												
	Analog speed command input		0 V DC to ±10 V DC/rated speed (Speed at 10 V is changeable with [Pr. PC12].)												
	Speed fluctuation rate		±0.01 % maximum (load fluctuation: 0 % to 100 %), 0 % (power fluctuation: ±10 %) ±0.2 % maximum (ambient temperature: 25 °C ± 10 °C) only when using analog speed command												
	Torque limit		Set by servo parameters or external analog input (0 V DC to +10 V DC/maximum torque)												
Torque control mode	Analog torque command input		0 V DC to ±8 V DC/maximum torque (input impedance: 10 kΩ to 12 kΩ)												
	Speed limit		Set by servo parameters or external analog input (0 V DC to ± 10 V DC/rated speed)												
Fully closed loop control (Note 5)			Supported												
Load-side encoder interface	MR-J5-A		Mitsubishi Electric high-speed serial communication												
	MR-J5-A-RJ		Mitsubishi Electric high-speed serial communication, A/B/Z-phase differential input signal												

MR-J5-A_ (General-Purpose Interface) Specifications (200 V)

A A-RJ

Servo amplifier model MR-J5-_(-RJ)		10A	20A	40A	60A	70A	100A	200A	350A	500A	700A	12KA	17KA	25KA
Servo functions		Advanced vibration suppression control II, adaptive filter II, robust filter, quick tuning, auto tuning, one-touch tuning, tough drive function, drive recorder function, machine diagnosis function (including failure prediction), power monitoring function, lost motion compensation function, super trace control (Note 5)												
Protective functions		Overcurrent shut-off, regenerative overvoltage shut-off, overload shut-off (electronic thermal), servo motor overheat protection, encoder error protection, regenerative error protection, undervoltage protection, instantaneous power failure protection, overspeed protection, error excessive protection, magnetic pole detection protection, linear servo control fault protection												
Safety sub-function, Safety performance		Refer to "Safety Sub-Functions" in section 1 of this catalog.												
Structure (IP rating)		Natural cooling, open (IP20)				Force cooling, open (IP20)				Force cooling, open (IP20) (Note 9)		Force cooling, open (IP20) (Note 12, 16)		
Close mounting	3-phase power supply input	Possible (Note 10)										Not possible		
	1-phase power supply input	Possible (Note 10)					Not possible		-					
Mass	[kg]	0.8			1.0	1.4		2.2		3.7	6.2	12.7		18.1

Notes:
1. Rated output and speed of a rotary servo motor and a direct drive motor; and continuous thrust and maximum speed of a linear servo motor are applicable when the servo amplifier is operated within the specified power supply voltage and frequency.
2. Select the most suitable regenerative option for your system with our Drive System Sizing Software Motorizer.
3. Refer to "Regenerative Option" in this catalog for the permissible regenerative power [W] when a regenerative option is used.
4. When using the dynamic brake, refer to "MR-J5 User's Manual" for the permissible load to motor inertia ratio and the permissible load to mass ratio.
5. For the servo amplifier firmware version supporting each function, refer to "MR-J5 User's Manual".
6. The values in brackets are the rated current for the 1-phase power supply input.
7. When the servo amplifier is used with a 1-phase power supply and combined with a servo motor of over 750 W, use the servo amplifiers at 75 % or less of the effective load ratio.
8. For a connection example of power supply circuit with DC input, refer to "MR-J5 User's Manual".
9. The connector part is excluded.
10. When the servo amplifiers are closely mounted, keep the ambient temperature within 0 °C to 45 °C, or use the servo amplifiers at 75 % or less of the effective load ratio.
11. Use an external dynamic brake with the 12 kW or larger servo amplifiers. Failure to do so will cause an accident because the servo motor does not stop immediately but coasts at emergency stop. Ensure the safety in the entire equipment.
12. This product is certified as IP00.
13. The external dynamic brake cannot be used to comply with the SEMI-F47 standard. Do not assign DB (Dynamic brake interlock) to the output device. If DB (Dynamic brake interlock) is assigned, the servo amplifier switches to servo-off status when an instantaneous power failure occurs.
14. The values in brackets are applicable when cooling fans (two units of 92 mm × 92 mm, minimum air flow: 1.0 m^3/min) are installed, and then [Pr. PA02] is changed.
15. Servo amplifiers without an enclosed regenerative resistor are also available. Refer to "Model Designation for 1-Axis Servo Amplifier" in this catalog for details.
16. Terminal blocks are excluded.

MR-J5-A_ (General-Purpose Interface) Specifications (400 V)

A A-RJ

Servo amplifier model MR-J5-_(-RJ)			60A4	100A4	200A4	350A4	500A4	700A4	12KA4	17KA4	25KA4
Output	Voltage		3-phase 0 V AC to 480 V AC								
	Rated current	[A]	1.6	2.8	5.5	8.6	14	17	32.0	41.0	63.0
Main circuit power supply input	Voltage/frequency (Note 1)	AC input	3-phase 380 V AC to 480 V AC, 50 Hz/60 Hz								
	Rated current	[A]	1.4	2.5	5.1	7.9	10.8	14.4	26.0	36.1	54.8
	Permissible voltage fluctuation	AC input	3-phase 323 V AC to 528 V AC								
	Permissible frequency fluctuation		±5 % maximum								
Control circuit power supply input	Voltage/frequency	AC input	1-phase 380 V AC to 480 V AC, 50 Hz/60 Hz								
	Rated current	[A]	0.1				0.2				
	Permissible voltage fluctuation	AC input	1-phase 323 V AC to 528 V AC								
	Permissible frequency fluctuation		±5 % maximum								
	Power consumption	[W]	30				45				
Interface power supply			24 V DC ± 10 % (required current capacity: 0.5 A (including CN8 connector signals))								
Control method			Sine-wave PWM control/current control method								
Permissible regenerative power	Built-in regenerative resistor (Note 2, 3)	[W]	30		100		130	170	-		
	External regenerative resistor (standard accessory) (Note 2, 3, 8, 9)	[W]	-						500 (800)	850 (1300)	
Dynamic brake (Note 4)			Built-in						External option (Note 5, 7)		
Communication function	USB		Connect a personal computer (MR Configurator2 compatible)								
	RS-422/RS-485		1:n communication (up to 32 axes)								
Encoder output pulse			Compatible (A/B/Z-phase pulse)								
Analog monitor			2 channels								
Position control mode	Maximum input pulse frequency		4 Mpulses/s (when using differential receiver), 200 kpulses/s (when using open collector)								
	Positioning feedback pulse		Encoder resolution: 26 bits								
	Command pulse multiplying factor		Electronic gear A/B multiple, A: 1 to 2147483647, B: 1 to 2147483647, 1/10 < A/B < 64000								
	In-position range setting		0 pulse to ±16777215 pulses (command pulse unit)								
	Error excessive		±3 rotations								
	Torque limit		Set by servo parameters or external analog input (0 V DC to +10 V DC/maximum torque)								
Speed control mode	Speed control range		Analog speed command 1:2000, internal speed command 1:5000								
	Analog speed command input		0 V DC to ±10 V DC/rated speed (Speed at 10 V is changeable with [Pr. PC12].)								
	Speed fluctuation rate		±0.01 % maximum (load fluctuation: 0 % to 100 %), 0 % (power fluctuation: ±10 %) ±0.2 % maximum (ambient temperature: 25 °C ± 10 °C) only when using analog speed command								
	Torque limit		Set by servo parameters or external analog input (0 V DC to +10 V DC/maximum torque)								
Torque control mode	Analog torque command input		0 V DC to ±8 V DC/maximum torque (input impedance: 10 kΩ to 12 kΩ)								
	Speed limit		Set by servo parameters or external analog input (0 V DC to ± 10 V DC/rated speed)								
Fully closed loop control			Supported								
Load-side encoder interface	MR-J5-A4		Mitsubishi Electric high-speed serial communication								
	MR-J5-A4-RJ		Mitsubishi Electric high-speed serial communication, A/B/Z-phase differential input signal								
Servo functions			Advanced vibration suppression control II, adaptive filter II, robust filter, quick tuning, auto tuning, one-touch tuning, tough drive function, drive recorder function, machine diagnosis function (including failure prediction), power monitoring function, lost motion compensation function, super trace control								
Protective functions			Overcurrent shut-off, regenerative overvoltage shut-off, overload shut-off (electronic thermal), servo motor overheat protection, encoder error protection, regenerative error protection, undervoltage protection, instantaneous power failure protection, overspeed protection, error excessive protection, magnetic pole detection protection, linear servo control fault protection								
Safety sub-function, Safety performance			Refer to "Safety Sub-Functions" in section 1 of this catalog.								
Structure (IP rating)			Natural cooling, open (IP20)		Force cooling, open (IP20)				Force cooling, open (IP20) (Note 6, 10)		
Close mounting			Not possible								
Mass		[kg]	1.6		2.2	2.3	5.2	5.4	12.7		18.1

MR-J5-A_ (General-Purpose Interface) Specifications (400 V)

A A-RJ

Notes:
1. Rated output and speed of a rotary servo motor are applicable when the servo amplifier is operated within the specified power supply voltage and frequency.
2. Select the most suitable regenerative option for your system with our Drive System Sizing Software Motorizer.
3. Refer to "Regenerative Option" in this catalog for the permissible regenerative power [W] when a regenerative option is used.
4. When using the dynamic brake, refer to "MR-J5 User's Manual" for the permissible load to motor inertia ratio.
5. Use an external dynamic brake with the 12 kW or larger servo amplifiers. Failure to do so will cause an accident because the servo motor does not stop immediately but coasts at emergency stop. Ensure the safety in the entire equipment.
6. This product is certified as IP00.
7. The external dynamic brake cannot be used to comply with the SEMI-F47 standard. Do not assign DB (Dynamic brake interlock) to the output device. If DB (Dynamic brake interlock) is assigned, the servo amplifier switches to servo-off status when an instantaneous power failure occurs.
8. The values in brackets are applicable when cooling fans (two units of 92 mm × 92 mm, minimum air flow: 1.0 m^3/min) are installed, and then [Pr. PA02] is changed.
9. Servo amplifiers without an enclosed regenerative resistor are also available. Refer to "Model Designation for 1-Axis Servo Amplifier" in this catalog for details.
10. Terminal blocks are excluded.

MR-J5-A_ Standard Wiring Diagram Example: Position Control Operation

A A-RJ

Connecting to RD75D

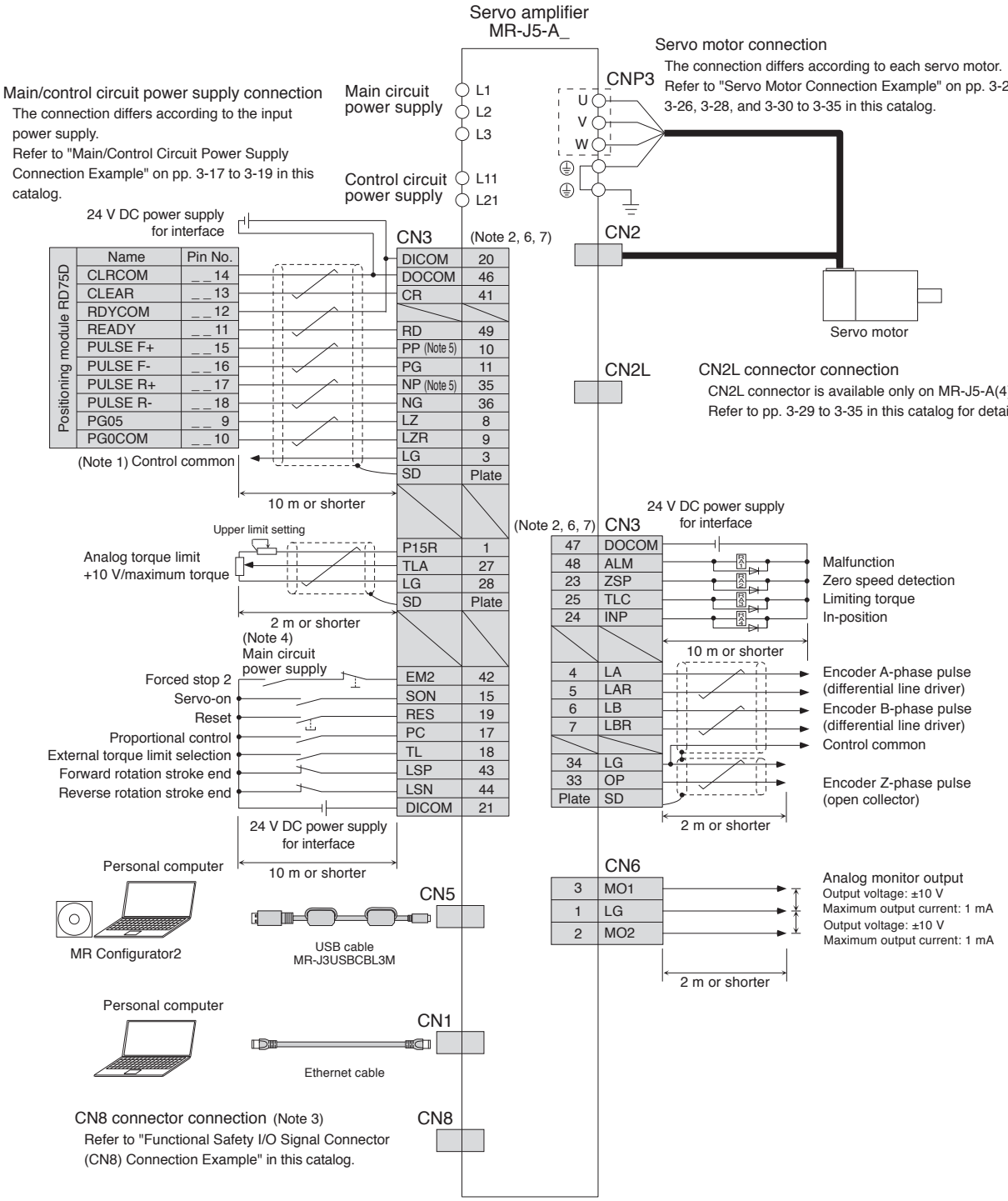

Notes:
1. This connection is not necessary for RD75D Positioning module. Note that the connection between LG and the control common terminal is recommended for some Positioning modules to improve noise tolerance.
2. This is for sink wiring. Source wiring is also possible.
3. Attach a short-circuit connector supplied with the servo amplifier when the functional safety (STO function) is not used.
4. To prevent an unexpected restart of the servo amplifier, create a circuit to turn off EM2 (Forced stop 2) when the main circuit power is turned off.
5. Pulse train input is available with sink input and source input of open-collector type. When using the source input, use PP2 and NP2 terminals. Refer to "MR-J5 User's Manual" for details.
6. The pins with the same signal name are connected in the servo amplifier.
7. The frame of the CN3 connector is not connected to the protective earth (PE) terminal. Using a cable clamp fitting (AERSBAN-_SET) or shield connection clamp (SCC 15-F) for grounding is recommended as necessary. For details of AERSBAN-_SET and SCC 15-F, refer to "MR-J5 User's Manual".

Be sure to read through User's Manual for the actual wiring and use. Use the equipment after you have a full knowledge of the equipment, safety information and instructions.

MR-J5-A_ Standard Wiring Diagram Example: Speed Control Operation

A A-RJ

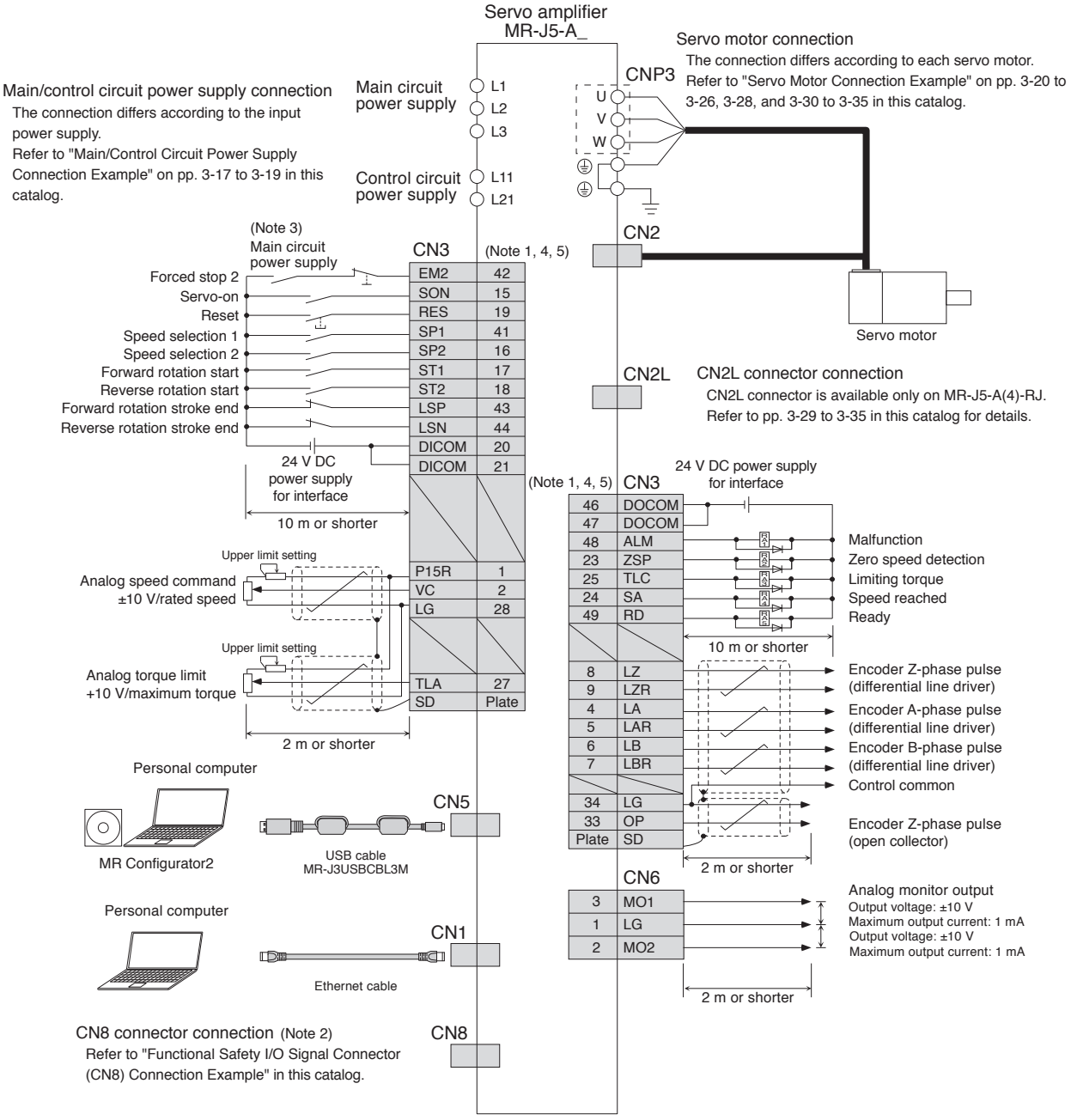

Notes: 1. This is for sink wiring. Source wiring is also possible.
2. Attach a short-circuit connector supplied with the servo amplifier when the functional safety (STO function) is not used.
3. To prevent an unexpected restart of the servo amplifier, create a circuit to turn off EM2 (Forced stop 2) when the main circuit power is turned off.
4. The pins with the same signal name are connected in the servo amplifier.
5. The frame of the CN3 connector is not connected to the protective earth (PE) terminal. Using a cable clamp fitting (AERSBAN-_SET) or shield connection clamp (SCC 15-F) for grounding is recommended as necessary. For details of AERSBAN-_SET and SCC 15-F, refer to "MR-J5 User's Manual".

Be sure to read through User's Manual for the actual wiring and use. Use the equipment after you have a full knowledge of the equipment, safety information and instructions.

MR-J5-A_ Standard Wiring Diagram Example: Torque Control Operation

A A-RJ

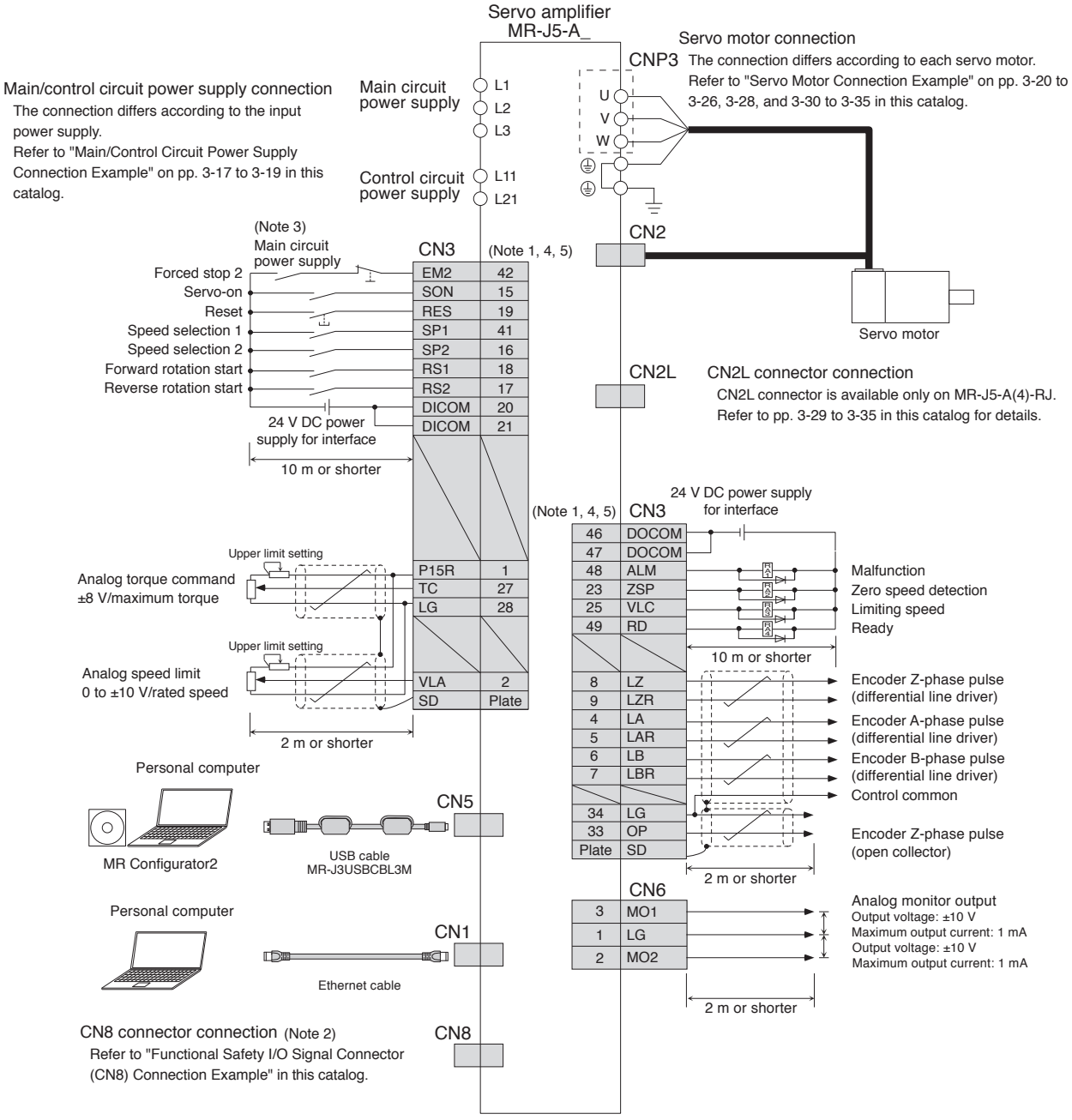

Notes: 1. This is for sink wiring. Source wiring is also possible.
2. Attach a short-circuit connector supplied with the servo amplifier when the functional safety (STO function) is not used.
3. To prevent an unexpected restart of the servo amplifier, create a circuit to turn off EM2 (Forced stop 2) when the main circuit power is turned off.
4. The pins with the same signal name are connected in the servo amplifier.
5. The frame of the CN3 connector is not connected to the protective earth (PE) terminal. Using a cable clamp fitting (AERSBAN-_SET) or shield connection clamp (SCC 15-F) for grounding is recommended as necessary. For details of AERSBAN-_SET and SCC 15-F, refer to "MR-J5 User's Manual".

Be sure to read through User's Manual for the actual wiring and use. Use the equipment after you have a full knowledge of the equipment, safety information and instructions.

MR-J5-A_ Dimensions

●MR-J5-10A, MR-J5-10A-RJ

●MR-J5-20A, MR-J5-20A-RJ

●MR-J5-40A, MR-J5-40A-RJ

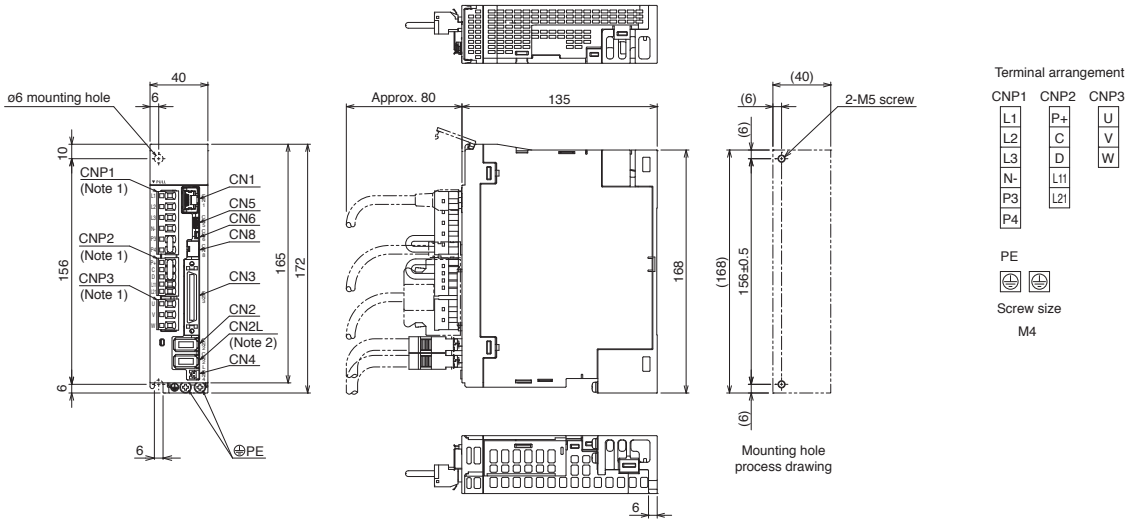

[Unit: mm]

●MR-J5-60A, MR-J5-60A-RJ

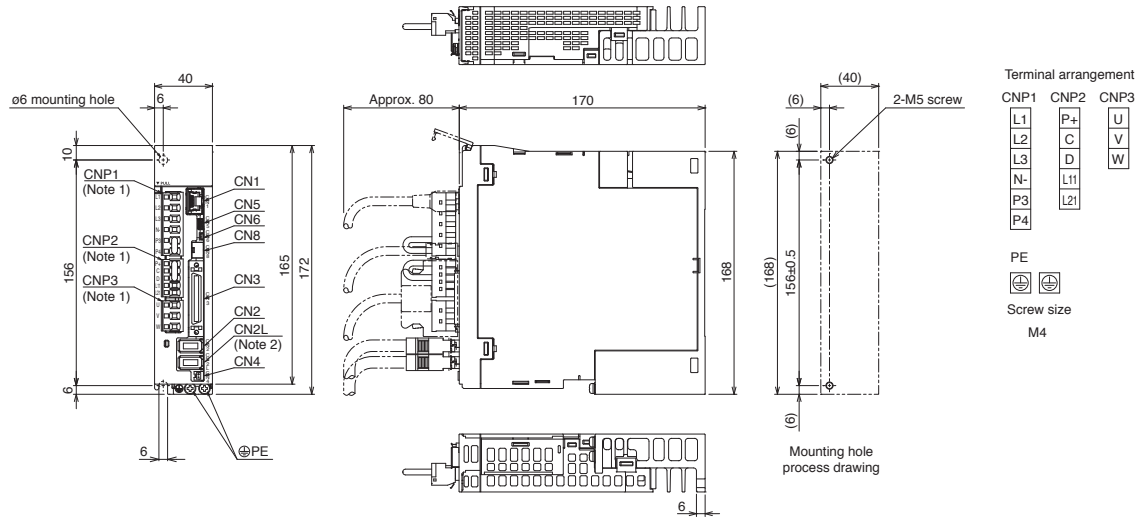

[Unit: mm]

Notes: 1. CNP1, CNP2, and CNP3 connectors are supplied with the servo amplifier.
2. CN2L connector is not available for MR-J5-A servo amplifiers.

MR-J5-A_ Dimensions

A A-RJ

●MR-J5-70A, MR-J5-70A-RJ

●MR-J5-100A, MR-J5-100A-RJ

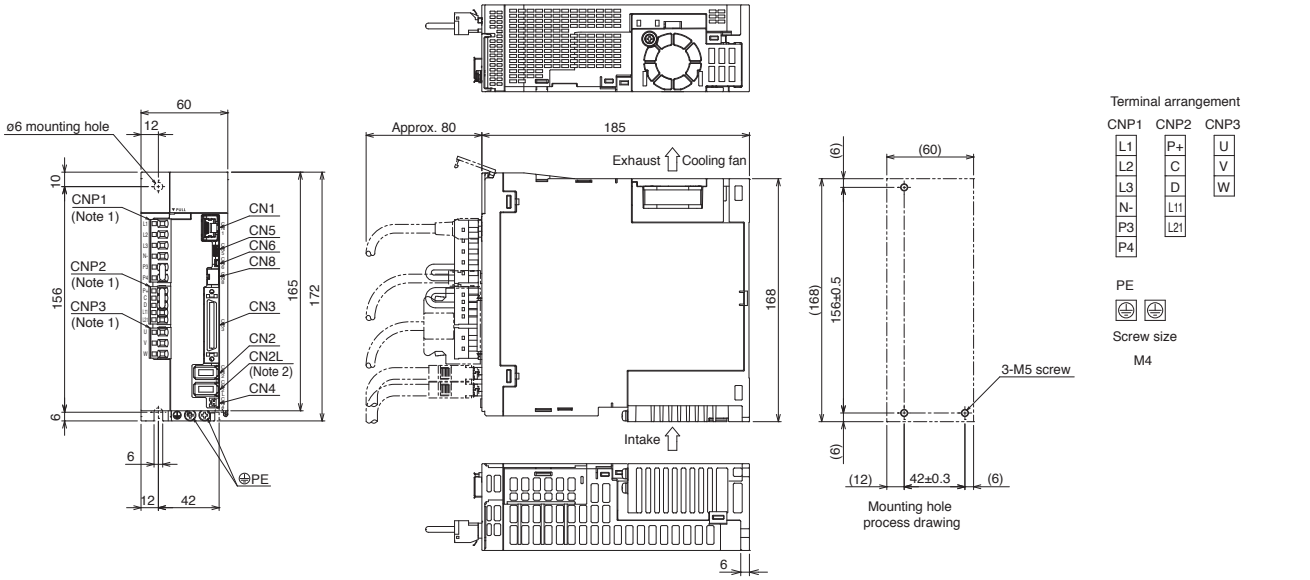

[Unit: mm]

●MR-J5-200A, MR-J5-200A-RJ (Note 3)

●MR-J5-350A, MR-J5-350A-RJ (Note 3)

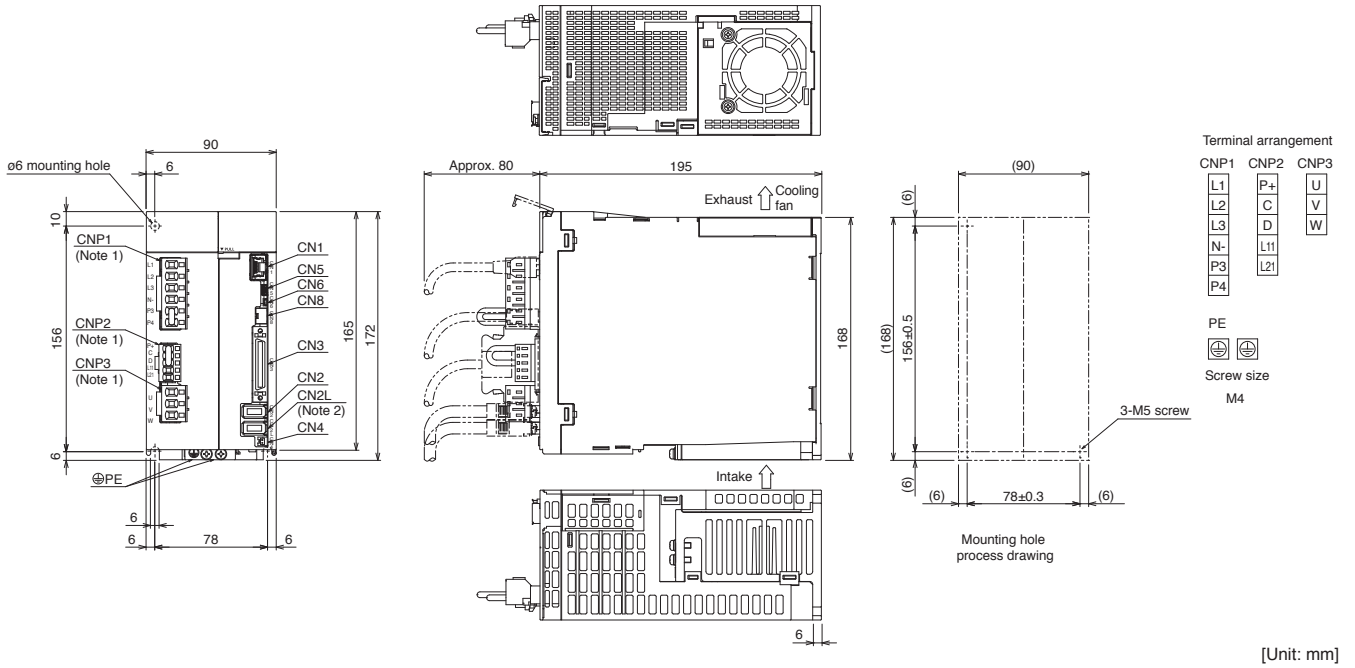

[Unit: mm]

Notes: 1. CNP1, CNP2, and CNP3 connectors are supplied with the servo amplifier.
2. CN2L connector is not available for MR-J5-A servo amplifiers.
3. For the servo amplifiers manufactured in August 2022 or later, the fan unit is mounted with two screws. Refer to "Mitsubishi Electric AC Servo System Sales and Service No. 22-02E" for details.

MR-J5-A_ Dimensions

A A-RJ

●MR-J5-500A, MR-J5-500A-RJ

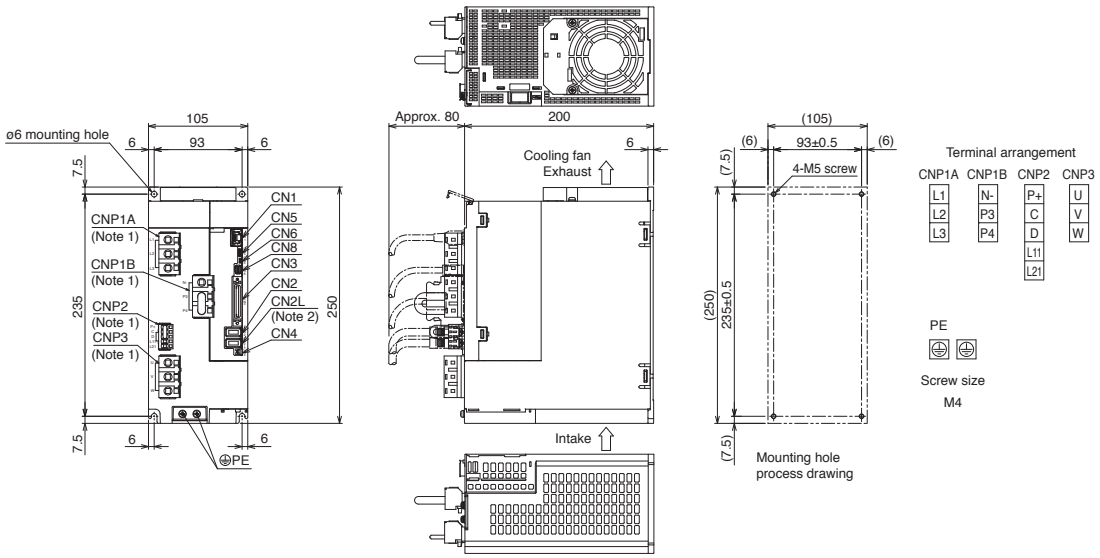

[Unit: mm]

●MR-J5-700A, MR-J5-700A-RJ

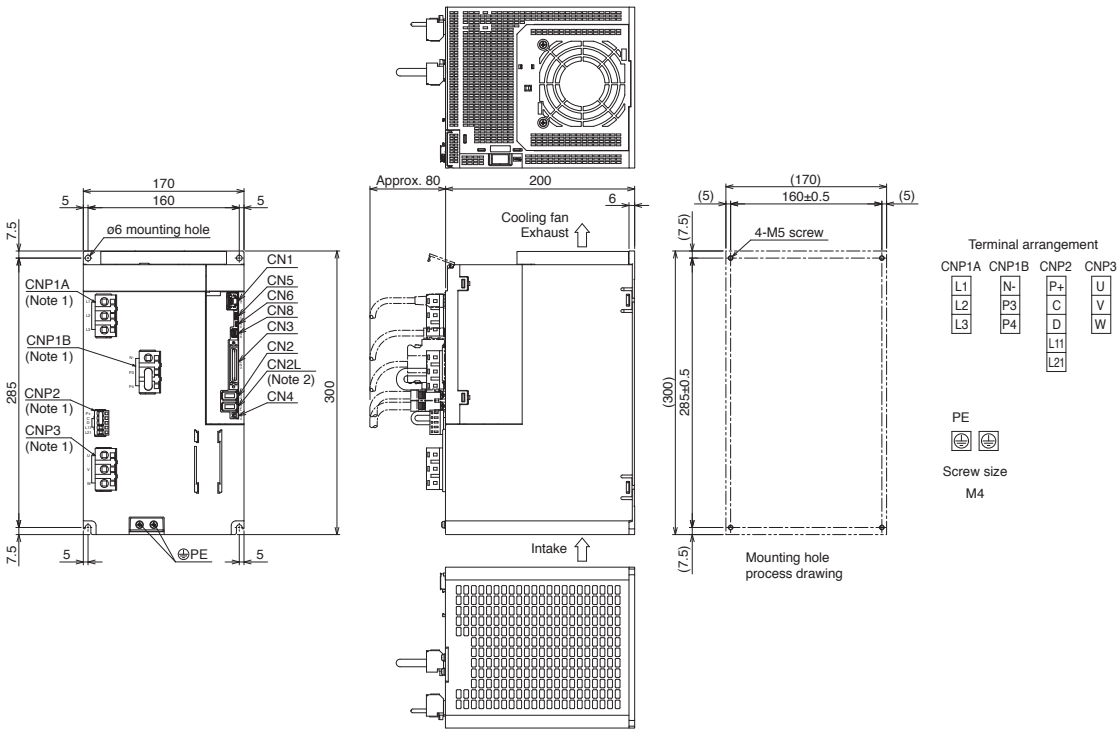

[Unit: mm]

Notes: 1. CNP1A, CNP1B, CNP2, and CNP3 connectors are supplied with the servo amplifier.
2. CN2L connector is not available for MR-J5-A servo amplifiers.

MR-J5-A_ Dimensions

A A-RJ

●MR-J5-60A4, MR-J5-60A4-RJ

●MR-J5-100A4, MR-J5-100A4-RJ

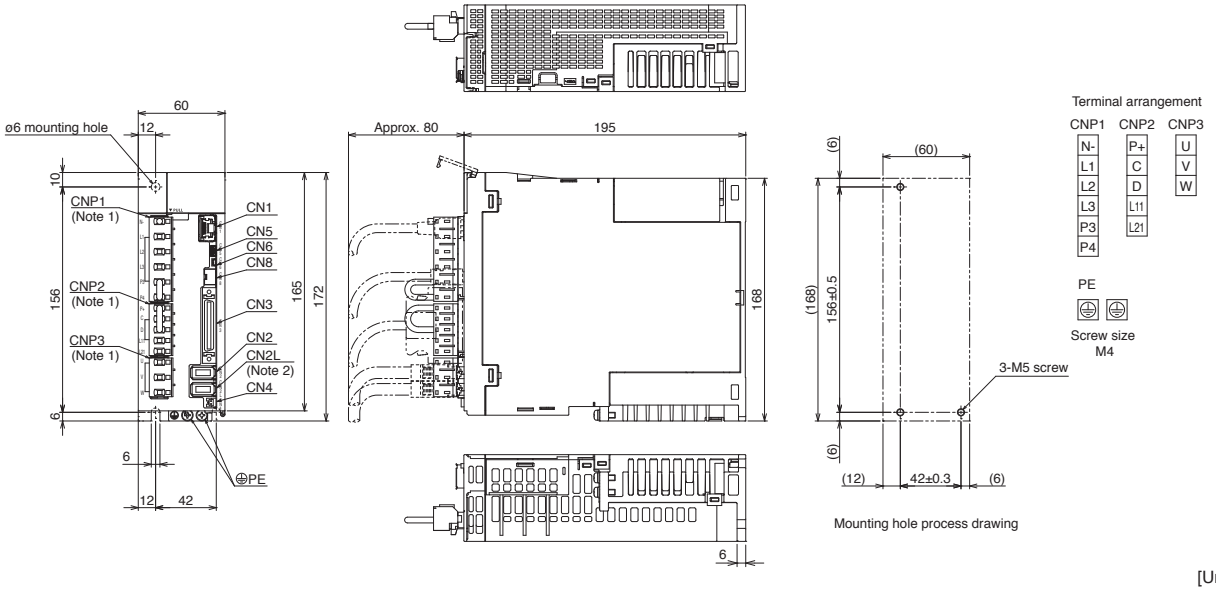

[Unit: mm]

●MR-J5-200A4, MR-J5-200A4-RJ (Note 3)

●MR-J5-350A4, MR-J5-350A4-RJ (Note 3)

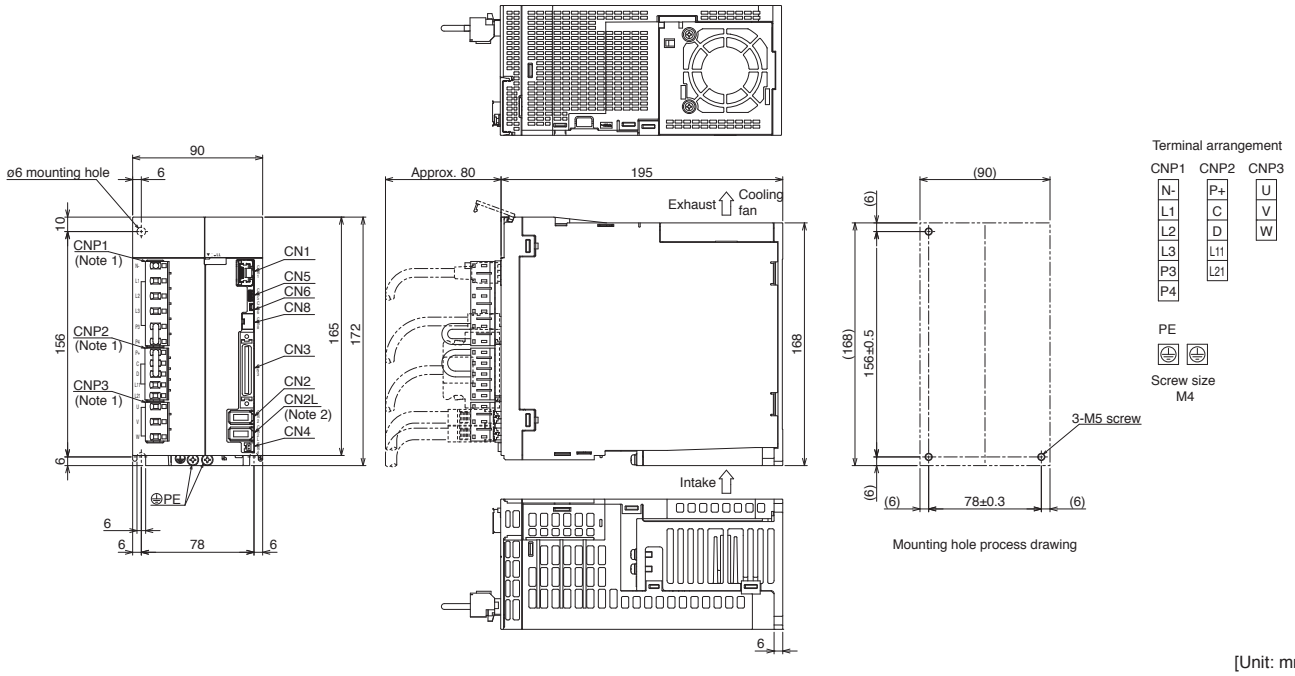

[Unit: mm]

Notes: 1. CNP1, CNP2, and CNP3 connectors are supplied with the servo amplifier.
2. CN2L connector is not available for MR-J5-A4 servo amplifiers.
3. For the servo amplifiers manufactured in August 2022 or later, the fan unit is mounted with two screws. Refer to "Mitsubishi Electric AC Servo System Sales and Service No. 22-02E" for details.

MR-J5-A_ Dimensions

A A-RJ

●MR-J5-500A4, MR-J5-500A4-RJ

●MR-J5-700A4, MR-J5-700A4-RJ

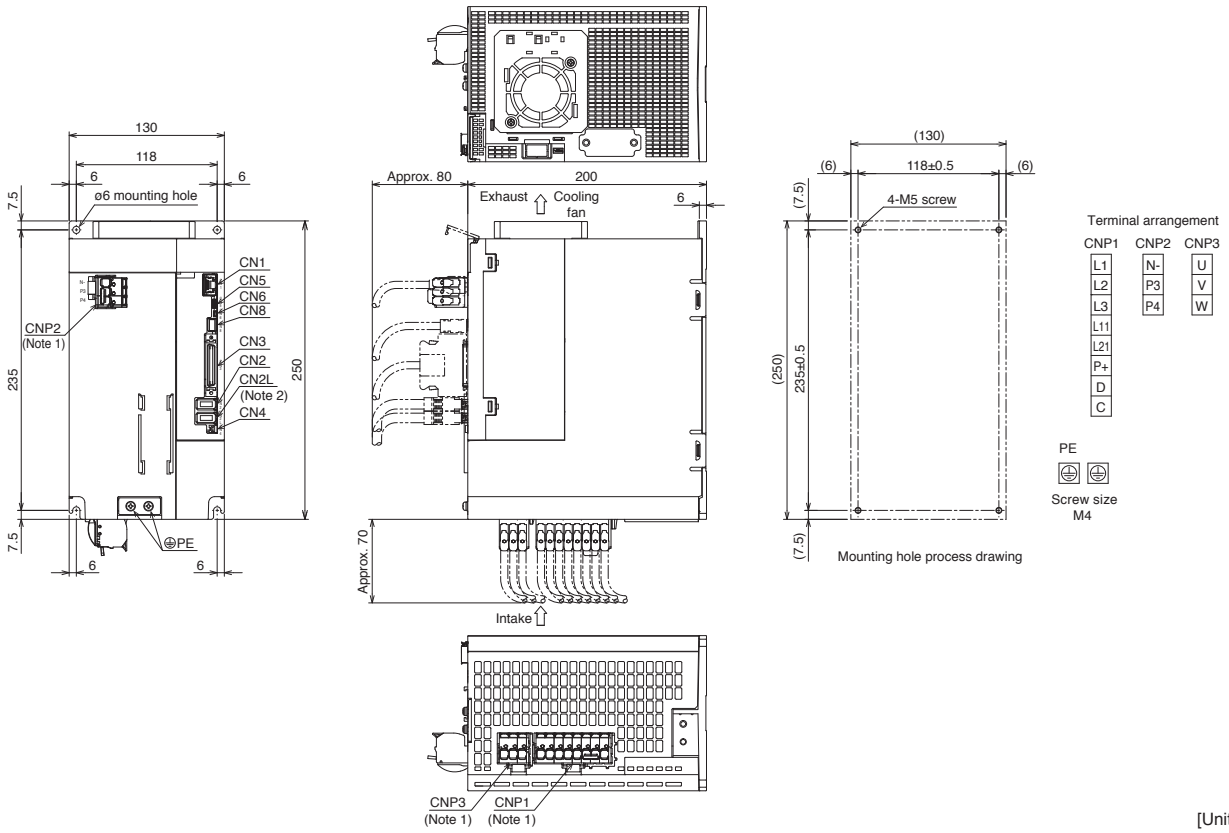

[Unit: mm]

●MR-J5-12KA(4)(-RJ), MR-J5-17KA(4)(-RJ)

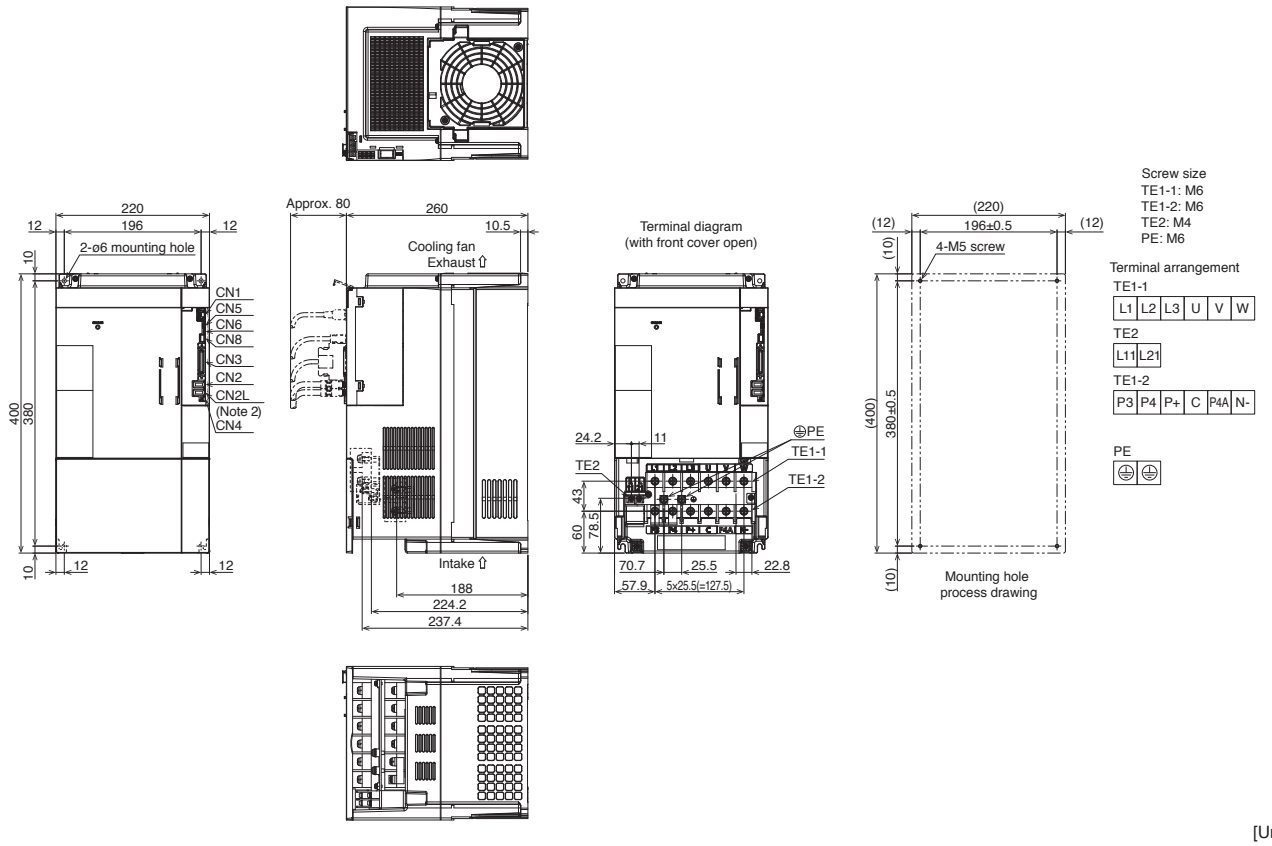

[Unit: mm]

Notes: 1. CNP1, CNP2, and CNP3 connectors are supplied with the servo amplifier.
2. CN2L connector is not available for MR-J5-A(4) servo amplifiers.

MR-J5-A_ Dimensions

A A-RJ

●MR-J5-25KA(4)(-RJ)

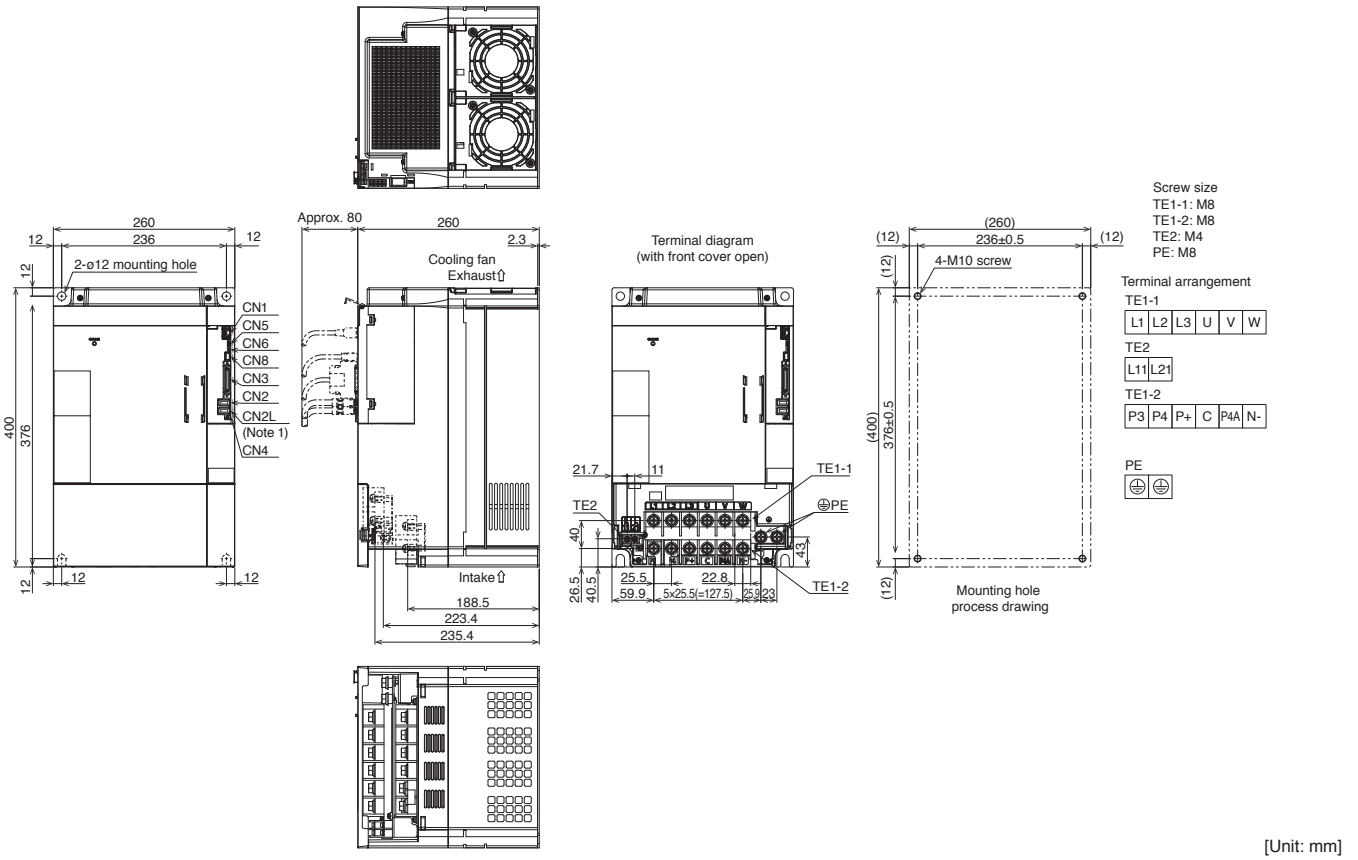

[Unit: mm]

Notes: 1. CN2L connector is not available for MR-J5-A(4) servo amplifiers.

MR-CM3K Specifications (200 V)

G | G-RJ | WG | B | B-RJ | WB | A | A-RJ

Simple converter unit model			MR-CM3K
Converter output	Rated voltage		270 V DC to 324 V DC
	Rated current	[A]	20
Main circuit power supply input	Voltage/frequency		3-phase 200 V AC to 240 V AC, 50 Hz/60 Hz
	Rated current	[A]	16
	Permissible voltage fluctuation		3-phase 170 V AC to 264 V AC
Overheat detection function	Thermal sensor		The contact between TH1 and TH2 opens when the thermal sensor detects an overheat condition.
	Contact specification	Maximum voltage	110 V AC/DC
		Maximum current	0.3 A at 20 V DC
		Minimum current	0.1 mA at 1 V DC
		Maximum capacity	6 VA
Compatible servo amplifier			MR-J5-10G(-(RJ)(N1))/B(-RJ)/A(-RJ) to MR-J5-200G(-(RJ)(N1))/B(-RJ)/A(-RJ), MR-J5W2-22G(-N1)/B to MR-J5W2-1010G(-N1)/B, MR-J5W3-222G(-N1)/B, MR-J5W3-444G(-N1)/B
Maximum number of connectable servo amplifiers			6 units
Total capacity of servo amplifiers to be driven		[kW]	3
Continuous rating		[kW]	3
Instantaneous maximum rating		[kW]	9
Structure (IP rating)			IP20
Close mounting			Possible
Environment			The operating environment is the same as that for the servo amplifiers. Refer to "1. Common Specifications" in this catalog.
Mass		[kg]	0.7
Wire size	L1/L2/L3/PE		2 mm² to 3.5 mm² (AWG 14 to 12)
	P4/N-		2 mm² to 3.5 mm² (AWG 14 to 12)
Total wiring length from P4/N- of simple converter to P4/N- of servo amplifier			5 m or shorter

MR-CM3K Wiring Diagram Example

G | G-RJ | WG | B | B-RJ | WB | A | A-RJ

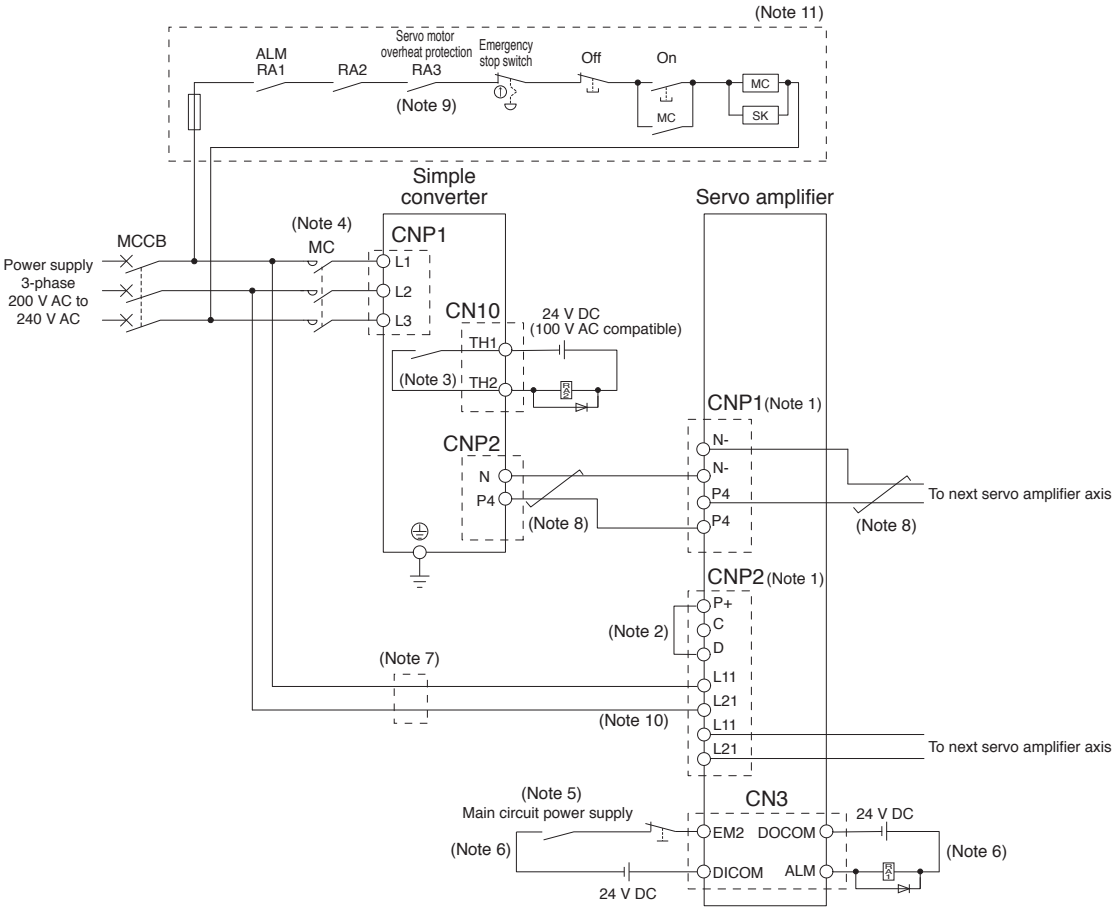

Notes:
1. Use option daisy chain power connectors when using a simple converter.
2. Connect P+ and D.
3. The contact between TH1 and TH2 opens when the thermal sensor detects an overheat condition.
4. Use a magnetic contactor with an operation delay time of 80 ms or less. The operation delay time is the time interval from current being applied to the coil until closure of contacts.
5. To prevent an unexpected restart of the servo amplifier, create a circuit to turn off EM2 (Forced stop 2) when the main circuit power is turned off.
6. Stop the commands from the controller as soon as the main circuit power supply is turned off when an alarm occurs even in one servo amplifier. The following are example methods to turn off the main circuit power supply: Configure a circuit with an I/O module, or connect relays for alarm output corresponding to each servo amplifier to the coil-side of the magnetic contactor in series.
7. Install an overcurrent protection device (molded-case circuit breaker, fuse, etc.) to protect the branch circuit.
8. Twist or bundle the wires between the simple converter and the servo amplifier and between the servo amplifiers with cable ties to keep the two wires close to each other. Keep the total wiring length between the simple converter and each servo amplifier 5 m or shorter.
9. When connecting a linear servo motor with a thermal protector, add a contact to shut off by being interlocked with the thermal protector output of the linear servo motor.
10. Do not ground the servo amplifier between L11 and L21 even when the control circuit power supply is separated from the main circuit power supply using an uninterruptible power supply (UPS) or an isolation transformer.
11. To turn on/off the main circuit power supply by a DC power supply, wire the circuit as follows. Do not use the 24 V DC interface power supply for the magnetic contactor. Provide a dedicated power supply to the magnetic contactor.

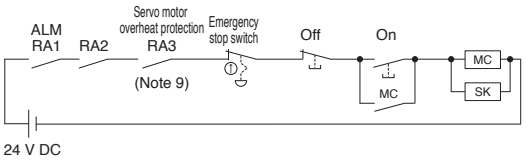

MR-CM3K Dimensions

G | G-RJ | WG | B | B-RJ | WB | A | A-RJ

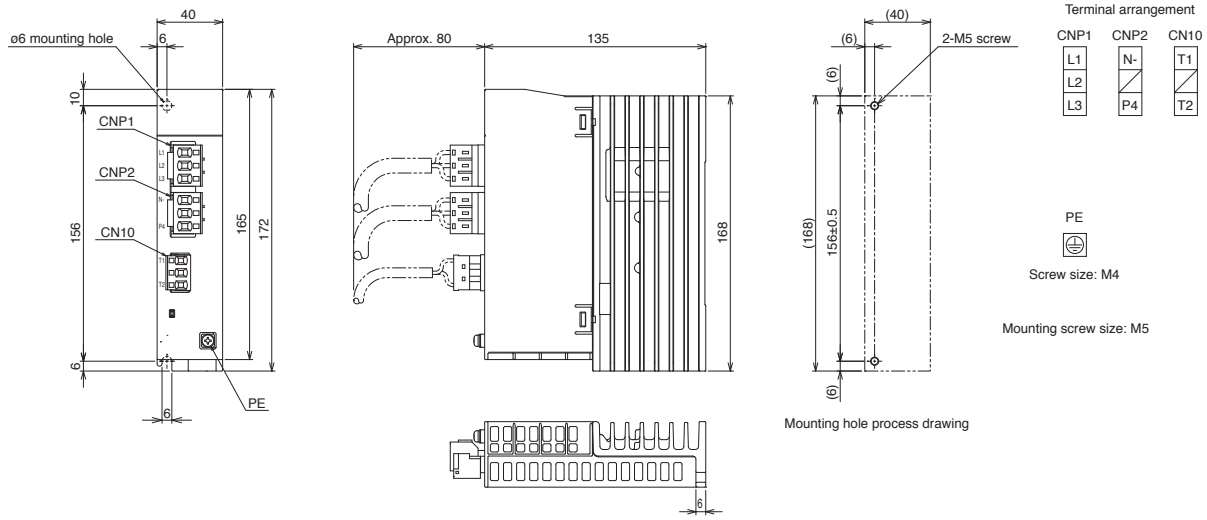

[Unit: mm]

MR-CV_ Specifications (Note 3) (400 V)

DG

Power regeneration converter unit model MR-CV_			11K4	18K4	30K4	37K4	45K4	55K4	75K4
Output	Rated voltage		513 V DC to 648 V DC						
	Rated current	[A]	21	38	72	82	99	119	150
Main circuit power supply input	Voltage/frequency (Note 1)		3-phase 380 V AC to 480 V AC, 50 Hz/60 Hz						
	Rated current	[A]	18	35	61	70	85	106	130
	Permissible voltage fluctuation		3-phase 323 V AC to 528 V AC						
	Permissible frequency fluctuation		±3 % maximum						
Control circuit power supply input	Voltage/frequency		1-phase 380 V AC to 480 V AC, 50 Hz/60 Hz						
	Rated current	[A]	0.1						
	Permissible voltage fluctuation		1-phase 323 V AC to 528 V AC						
	Permissible frequency fluctuation		±3 % maximum						
	Power consumption	[W]	30						
Interface power supply			24 V DC ± 10 % (required current capacity: 0.35 A)						
Capacity		[kW]	11	18	30	37	45	55	75
Protective functions			Undervoltage protection, regenerative error protection, regenerative overvoltage shut-off, MC drive circuit error protection, open-phase detection, inrush current suppression circuit error protection, main circuit device overheat error protection, cooling fan error protection, overload shut-off (electronic thermal)						
Continuous rating		[kW]	7.5	11	20	25		55	
Instantaneous maximum rating		[kW]	39	60	92	101	125	175	180
Structure (IP rating)			Force cooling, open (IP20) (Note 2)						
Mass		[kg]	6.1		12.1			25.0	

Notes: 1. Rated output and speed of a rotary servo motor are applicable when the power regeneration converter unit is operated within the specified power supply voltage and frequency.
2. Terminal blocks are excluded.
3. MR-CV_4 power regeneration converter units require a mounting attachment. Refer to "Mounting Attachment" in this catalog for details.

MR-CV_ Connection Example

For the connection example of power regeneration converter units, refer to "Main/Control Circuit Power Supply Connection Example For connecting MR-CV_ and MR-J5D_-G4(-N1)" in this catalog.

MR-CV_ Dimensions

●MR-CV11K4
●MR-CV18K4

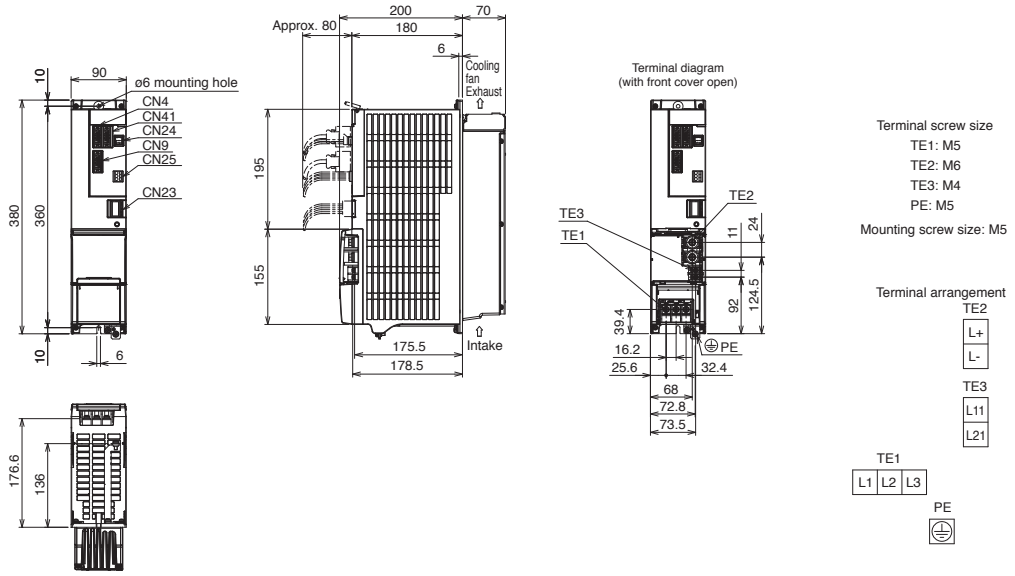

[Unit: mm]

●MR-CV30K4
●MR-CV37K4
●MR-CV45K4

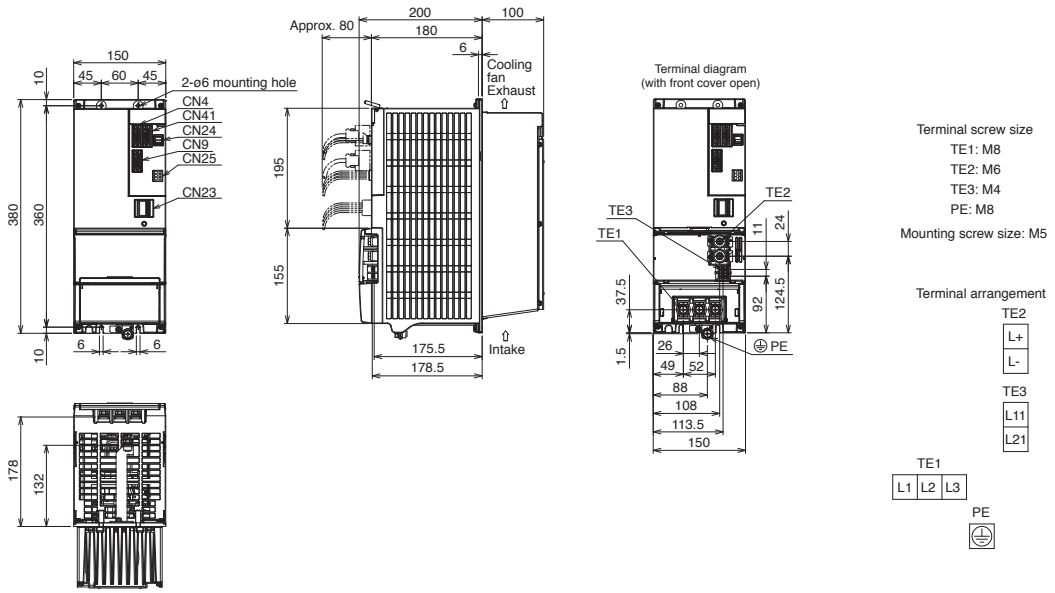

[Unit: mm]

MR-CV_ Dimensions

DG

●MR-CV55K4

●MR-CV75K4

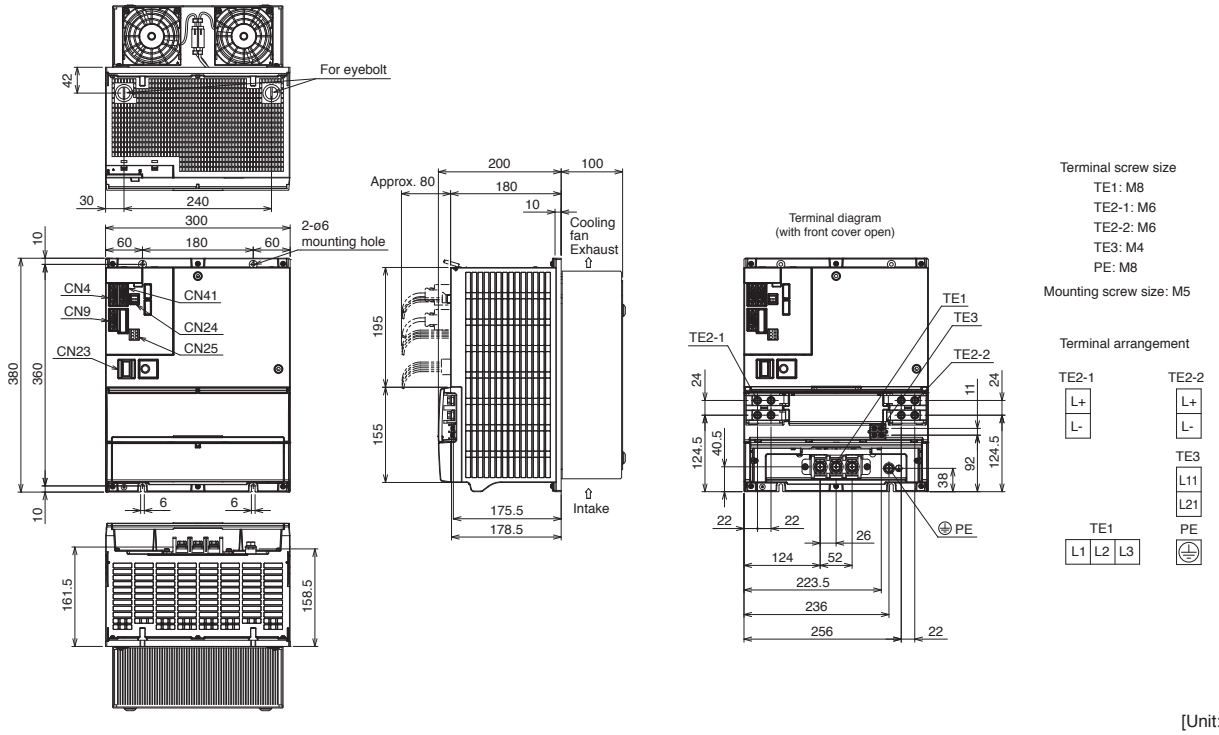

[Unit: mm]

Selection of Converter Unit, Servo Amplifier, and Drive Unit

Combination of a simple converter and servo amplifiers

G G-RJ WG B B-RJ WB A A-RJ

Select a servo amplifier for connection that meets the following conditions.

- Connectable servo amplifier models
  MR-J5-10_ to MR-J5-200_, MR-J5W2-22_ to MR-J5W2-1010_, MR-J5W3-222_/MR-J5W3-444_
- The sum of rated capacities [kW] of connected servo amplifiers ≤ 3 kW (MR-CM3K rated output)
  When using a multi-axis servo amplifier, calculate the sum of the rated capacities of all axes as the rated capacity of the servo amplifier.
- Number of connectable servo amplifiers to one MR-CM3K ≤ 6
  A multi-axis servo amplifier is counted as one servo amplifier unit, rather than the number of axes.

	MR-CM3K (200 V)
Maximum number of connectable servo amplifiers	6
Total capacity of connectable servo amplifiers	3 kW
Continuous rating	3 kW
Instantaneous maximum rating	9 kW

Combination of a power regeneration converter unit and drive units

DG

Select a power regeneration converter unit which meets the following conditions. When all the conditions are satisfied, multiple MR-J5D_-G4(-N1) drive units can be connected to one power regeneration converter unit. When connecting the multiple MR-J5D_-G4(-N1) drive units, install the drive units in descending order of capacity per axis from the right side of the power regeneration converter unit.
Refer to "MR-J5D User's Manual" for details of the selection.

(1) Effective value [kW] of total output power of servo motors ≤ Continuous rating [kW] of MR-CV_
(2) Maximum value [kW] of total output power of servo motors × 1.2 ≤ Instantaneous maximum rating [kW] of MR-CV_
(3) Total widths of MR-J5D_-G4(-N1) (one side) ≤ 1500 mm

		MR-CV_ (400 V)						
		11K4	18K4	30K4	37K4	45K4	55K4	75K4
Continuous rating	[kW]	7.5	11	20	25	25	55	55
Instantaneous maximum rating	[kW]	39	60	92	101	125	175	180
Total widths of MR-J5D_-G4(-N1)		1500 mm or shorter						

		MR-J5D1-_(-N1)					MR-J5D2-_(-N1)					MR-J5D3-_(-N1)	
		100G4	200G4	350G4	500G4	700G4	100G4	200G4	350G4	500G4	700G4	100G4	200G4
Unit width	[mm]	60					60			75		60	

MEMO

4 Rotary Servo Motors

Model Designation 4-3

HK-KT Series
Specifications 4-8
Torque Characteristics 4-15
Dimensions 4-22
Connector Dimensions 4-25
Special Shaft Dimensions 4-26
Geared Servo Motor Specifications 4-27
Geared Servo Motor Dimensions 4-30
Geared Servo Motor Special Shaft Dimensions 4-33

HK-MT Series
Specifications 4-34
Torque Characteristics 4-36
Dimensions 4-38
Connector Dimensions 4-40
Special Shaft Dimensions 4-41

HK-ST Series
Specifications 4-42
Torque Characteristics 4-50
Dimensions 4-56
Special Shaft Dimensions 4-58
Geared Servo Motor Specifications 4-59
Geared Servo Motor Dimensions 4-65
Geared Servo Motor Special Shaft Dimensions 4-69

HK-RT Series
Specifications....4-70
Torque Characteristics....4-72
Dimensions....4-74
Connector Dimensions....4-75
Special Shaft Dimensions....4-75

HK-JT Series
Specifications....4-76
Torque Characteristics....4-78
Dimensions....4-79
Special Shaft Dimensions....4-80

Power Supply Capacity....4-81

* Refer to p. 7-90 in this catalog for conversion of units.
* In this section, a term of servo amplifier includes a combination of a drive unit and a converter unit.
* The characteristics and numerical values without tolerances mentioned in this catalog are representative values.

Model Designation (Note 2)

●HK-KT series (low inertia, small capacity)

H K - K T 4 3 4 W B

Symbol	Special specifications
None	Standard
WS	Servo motors with functional safety (Note 4)

Symbol	Shaft shape
None	Standard (straight shaft)
D	D-cut shaft
L	L-cut shaft
K	Keyed shaft (with a key)
N	Keyed shaft (without a key)

Symbol	Gear reducer
None	None
G1	With a gear reducer for general industrial machines, flange mounting
G5	With a flange-output type gear reducer for high precision applications, flange mounting
G7	With a shaft-output type gear reducer for high precision applications, flange mounting

Symbol	Oil seal (Note 1)
None	None
J	Installed (Note 3)

Symbol	Electromagnetic brake
None	None
B	Installed

Symbol	Structure
None	Standard
U	Flat type

Symbol	Symbol	Motor type	
		When connected with a 200 V servo amplifier	When connected with a 400 V servo amplifier
None	W	Standard specifications	High-speed specifications (torque increased in high-speed area)
4	W	Low-speed and high-torque specifications (combined with a lower-capacity servo amplifier)	Standard specifications
None	None	Standard specifications	-
4	None	-	Standard specifications

Symbol	Rated speed [r/min]
2	2000
3	3000

Symbol	Rated output [kW]	Symbol	Rated output [kW]
05	0.05	6	0.6
1	0.1	7M	0.75
1M	0.15	10	1.0
2	0.2	15	1.5
4	0.4	20	2.0

Notes: 1. The dimensions are the same regardless of whether or not an oil seal is installed.
2. This section describes what each symbol in a model name indicates. Some combinations of symbols are not available.
3. A geared servo motor with an oil seal installed is not available.
4. The dimensions of the servo motors with functional safety are the same as those of the standard servo motors.

Model Designation (Note 2)

●HK-MT series (ultra-low inertia, small capacity)

H K - M T 4 3 V W B

Symbol	Special specifications
None	Standard
WS	Servo motors with functional safety (Note 3)

Symbol	Shaft shape
None	Standard (straight shaft)
D	D-cut shaft
L	L-cut shaft
K	Keyed shaft (with a key)
N	Keyed shaft (without a key)

Symbol	Oil seal (Note 1)
None	None
J	Installed

Symbol	Electromagnetic brake
None	None
B	Installed

Symbol	Maximum speed
None	Standard
V	Incremental encoder/ maximum speed increased

Symbol	Rated speed [r/min]
3	3000

Symbol	Rated output [kW]
05	0.05
1	0.1
1M	0.15
2	0.2
4	0.4
6	0.6
7M	0.75
10	1.0

Notes: 1. The dimensions are the same regardless of whether or not an oil seal is installed.
2. This section describes what each symbol in a model name indicates. Some combinations of symbols are not available.
3. The dimensions of the servo motors with functional safety are the same as those of the standard servo motors.

Model Designation (Note 2)

●HK-ST series (medium inertia, medium capacity)

H K - S T 2 0 2 4 A W B

Symbol	Special specifications
None	Standard
WS	Servo motors with functional safety (Note 5)

Symbol	Shaft shape
None	Standard (straight shaft) (Note 3)
K	Keyed shaft (with a key)
N	Keyed shaft (without a key)

Symbol	Gear reducer
None	None
G1	With a gear reducer for general industrial machines, flange mounting
G1H	With a gear reducer for general industrial machines, foot mounting
G5	With a flange-output type gear reducer for high precision applications, flange mounting
G7	With a shaft-output type gear reducer for high precision applications, flange mounting

Symbol	Oil seal (Note 1)
None	None
J	Installed (Note 4)

Symbol	Electromagnetic brake
None	None
B	Installed

Symbol	Structure
None	Standard
A	Long type (Small flange type)
U	Flat type

Symbol	Symbol	Motor type	
		When connected with a 200 V servo amplifier	When connected with a 400 V servo amplifier
None	W	Standard specifications	-
4	W	Low-speed and high-torque specifications (combined with a lower-capacity servo amplifier)	Standard specifications
None	None	Standard specifications	-
4	None	-	Standard specifications

Symbol	Rated speed [r/min]
2	2000
3	3000

Symbol	Rated output [kW]
5	0.5
7M	0.75
10	1.0
15	1.5
17	1.75
20	2.0
30	3.0
35	3.5
50	5.0
70	7.0

Notes: 1. The dimensions are the same regardless of whether or not an oil seal is installed.
2. This section describes what each symbol in a model name indicates. Some combinations of symbols are not available.
3. The standard HK-ST G1/G1H servo motors have a keyed shaft (with a key).
4. A geared servo motor with an oil seal installed is not available.
5. The dimensions of the servo motors with functional safety are the same as those of the standard servo motors.

Model Designation (Note 2)

●HK-RT series (ultra-low inertia, medium capacity)

H K - R T 1 0 3 4 W B

Symbol	Special specifications
None	Standard
WS	Servo motors with functional safety (Note 3)

Symbol	Shaft shape
None	Standard (straight shaft)
K	Keyed shaft (with a key)
N	Keyed shaft (without a key)

Symbol	Oil seal (Note 1)
None	None
J	Installed

Symbol	Electromagnetic brake
None	None
B	Installed

Symbol	Symbol	Motor type	
		When connected with a 200 V servo amplifier	When connected with a 400 V servo amplifier
None	W	Standard specifications	-
4		-	Standard specifications

Symbol	Rated speed [r/min]
3	3000

Symbol	Rated output [kW]	Symbol	Rated output [kW]
10	1.0	35	3.5
15	1.5	50	5.0
20	2.0	70	7.0

Notes: 1. The dimensions are the same regardless of whether or not an oil seal is installed.
2. This section describes what each symbol in a model name indicates. Some combinations of symbols are not available.
3. The dimensions of the servo motors with functional safety are the same as those of the standard servo motors.

Model Designation (Note 1)

●HK-JT series (low inertia, medium/large capacity)

H K - J T 7 0 1 M 4 B J

Symbol	Special specifications
None	Standard
WS	Servo motors with functional safety (Note 2, 3)

Symbol	Shaft shape
None	Standard (straight shaft)
N	Keyed shaft (without a key)

Symbol	Oil seal
J	Installed (Note 4)

Symbol	Electromagnetic brake
None	None
B	Installed

Symbol	Compatible servo amplifier
None	200 V
4	400 V

Symbol	Rated speed [r/min]
1	1000
1M	1500

Symbol	Rated output [kW]
70	7.0
11K	11
15K	15
22K	22

Notes: 1. This section describes what each symbol in a model name indicates. Some combinations of symbols are not available.
2. The dimensions of the servo motors with functional safety are the same as those of the standard servo motors.
3. Available only with the servo motors with the rated speed of 1500 r/min.
4. Oil seal is installed in HK-JT series as standard.

HK-KT_W (Low Inertia, Small Capacity)

Specifications when connected with a 200 V servo amplifier

Flange size		[mm]	40 × 40			60 × 60			
Rotary servo motor model		HK-KT	053W	13W	1M3W	13UW	23W	43W	63W
Continuous running duty (Note 4)	Rated output	[kW]	0.05	0.1	0.15	0.1	0.2	0.4	0.6
	Rated torque (Note 5)	[N•m]	0.16 (Note 6)	0.32	0.48	0.32	0.64	1.3	1.9
Maximum torque (Note 3)		[N•m]	0.56 (0.72)	1.1 (1.4)	1.7 (2.1)	1.1 (1.4)	2.2 (2.9)	4.5 (5.7)	6.7 (8.6)
Rated speed (Note 4)		[r/min]	3000						
Maximum speed (Note 4)		[r/min]	6700						
Power rate at continuous rated torque [kW/s]	Without electromagnetic brake		6.4	14.8	23.3	8.4	19.4	39.5	61.0
	With electromagnetic brake		5.8	14.0	22.4	6.6	16.0	36.7	58.0
Rated current		[A]	1.3	1.2	1.2	1.1	1.4	2.6	4.5
Maximum current (Note 3)		[A]	4.6 (6.2)	4.6 (6.0)	4.5 (6.0)	4.6 (6.0)	5.4 (7.1)	9.8 (14)	19 (25)
Moment of inertia J [× 10^{-4} kg•m^2]	Without electromagnetic brake		0.0394	0.0686	0.0977	0.121	0.209	0.410	0.598
	With electromagnetic brake		0.0434	0.0725	0.102	0.153	0.254	0.442	0.629
Recommended load to motor inertia ratio (Note 1)			20 times or less (Note 9)		20 times or less	10 times or less (Note 9)	23 times or less (Note 8)	23 times or less	25 times or less
Speed/position detector			Batteryless absolute/incremental 26-bit encoder (resolution: 67,108,864 pulses/rev)						
Type			Permanent magnet synchronous motor						
Oil seal			None (Servo motors with an oil seal are available.) (Note 6)						
Electromagnetic brake			None (Servo motors with an electromagnetic brake are available.)						
Thermistor			None						
Insulation class			155 (F)						
Structure			Totally enclosed, natural cooling (IP rating: IP67) (Note 2, 7)						
Vibration resistance *1		[m/s^2]	X: 49, Y: 49						
Vibration rank			V10 *3						
Permissible load for the shaft *2	L	[mm]	25				30		
	Radial	[N]	88				245		
	Thrust	[N]	59				98		
Mass [kg]	Without electromagnetic brake		0.27	0.37	0.47	0.57	0.77	1.2	1.5
	With electromagnetic brake		0.53	0.63	0.73	0.79	1.2	1.6	1.9

Notes: 1. Contact your local sales office if the load to motor inertia ratio exceeds the value in the table.
2. The shaft-through portion is excluded. Refer to the asterisk 4 of "Annotations for Rotary Servo Motor Specifications" on p. 4-86 in this catalog for the shaft-through portion.
3. The values in brackets are applicable when the torque is increased by combining a larger-capacity servo amplifier. Refer to "Combinations of Rotary Servo Motors and Servo Amplifiers" in this catalog for the available combinations.
4. The continuous running duty and the speed are not guaranteed when the power supply voltage is dropped.
5. When unbalanced torque is generated, such as in a vertical lift machine, keep the unbalanced torque of the machine under 70 % of the servo motor rated torque.
6. For HK-KT053W_J_ (with an oil seal), use the servo motor at a derating rate of 80 %.
7. When IP67 cables are required, please contact Mitsubishi Electric System & Service Co., Ltd. OVERSEAS SERVICE SECTION. (Email: osb.webmaster@melsc.jp)
8. When the speed is 6000 r/min or less, the recommended load to motor inertia ratio is 28 times or less.
9. When the servo motor is combined with a 0.1 kW servo amplifier, this recommended load to motor inertia ratio is applicable for operating the servo motor at the rated speed. If operating speed exceeds the rated speed, check whether a regenerative option is required using drive sizing software Motorizer. A servo amplifier with a larger capacity can be combined.

Refer to "Annotations for Rotary Servo Motor Specifications" on p. 4-86 in this catalog for details about asterisks 1 to 3.

Electromagnetic brake specifications (Note 1)

Model		HK-KT	053WB	13WB	1M3WB	13UWB	23WB	43WB	63WB
Type (Note 3)			Spring actuated type safety brake						
Rated voltage (Note 4)			24 V DC (-10 % to 0 %)						
Power consumption		[W] at 20 °C	6.4				7.9		
Electromagnetic brake static friction torque (Note 5)		[N•m]	0.48 or higher				1.9 or higher		
Permissible braking work	Per braking	[J]	5.6				22		
	Per hour	[J]	56				220		
Electromagnetic brake life (Note 2)	Number of braking times		20000						
	Work per braking	[J]	5.6				22		

Notes: 1. The electromagnetic brake is for holding. It cannot be used for deceleration applications.
2. Brake lining wear due to braking will increase the brake gap, but the gap is not adjustable. Therefore, the brake life indicates the number of times the brake can be applied before gap adjustment becomes necessary.
3. This type does not have a manual release mechanism. Use a 24 V DC power supply to release the brake electrically.
4. Prepare a power supply exclusively for the electromagnetic brake.
5. The value of the brake static friction torque is the lower limit in the initial state at 20 °C.

HK-KT_W (Low Inertia, Small Capacity)

Specifications when connected with a 200 V servo amplifier

Flange size		[mm]	80 × 80			
Rotary servo motor model		HK-KT	23UW	43UW	7M3W	103W
Continuous running duty (Note 4)	Rated output	[kW]	0.2	0.4	0.75	1.0
	Rated torque (Note 5)	[N•m]	0.64	1.3	2.4	3.2
Maximum torque (Note 3)		[N•m]	1.9 (2.5)	4.5 (5.7)	8.4 (10.7)	11.1 (14.3)
Rated speed (Note 4)		[r/min]	3000			
Maximum speed (Note 4)		[r/min]	6700			6500
Power rate at continuous rated torque [kW/s]	Without electromagnetic brake		9.7	22.3	41.6	60.3
	With electromagnetic brake		7.3	18.8	37.7	56.0
Rated current		[A]	1.5	2.1	4.7	5.0
Maximum current (Note 3)		[A]	5.9 (9.0)	9.2 (13)	20 (26)	21 (28)
Moment of inertia J [× 10^{-4} kg•m^2]	Without electromagnetic brake		0.419	0.726	1.37	1.68
	With electromagnetic brake		0.557	0.864	1.51	1.81
Recommended load to motor inertia ratio (Note 1)			10 times or less		16 times or less	17 times or less
Speed/position detector			Batteryless absolute/incremental 26-bit encoder (resolution: 67,108,864 pulses/rev)			
Type			Permanent magnet synchronous motor			
Oil seal			None (Servo motors with an oil seal are available.)			
Electromagnetic brake			None (Servo motors with an electromagnetic brake are available.)			
Thermistor			None			
Insulation class			155 (F)			
Structure			Totally enclosed, natural cooling (IP rating: IP67) (Note 2, 6)			
Vibration resistance *1		[m/s^2]	X: 49, Y: 49			
Vibration rank			V10 *3			
Permissible load for the shaft *2	L	[mm]	30		40	
	Radial	[N]	245		392	
	Thrust	[N]	98		147	
Mass [kg]	Without electromagnetic brake		1.2	1.5	2.2	2.4
	With electromagnetic brake		1.6	1.9	2.9	3.1

Notes: 1. Contact your local sales office if the load to motor inertia ratio exceeds the value in the table.
2. The shaft-through portion is excluded. Refer to the asterisk 4 of "Annotations for Rotary Servo Motor Specifications" on p. 4-86 in this catalog for the shaft-through portion.
3. The values in brackets are applicable when the torque is increased by combining a larger-capacity servo amplifier. Refer to "Combinations of Rotary Servo Motors and Servo Amplifiers" in this catalog for the available combinations.
4. The continuous running duty and the speed are not guaranteed when the power supply voltage is dropped.
5. When unbalanced torque is generated, such as in a vertical lift machine, keep the unbalanced torque of the machine under 70 % of the servo motor rated torque.
6. When IP67 cables are required, please contact Mitsubishi Electric System & Service Co., Ltd. OVERSEAS SERVICE SECTION. (Email: osb.webmaster@melsc.jp)

Refer to "Annotations for Rotary Servo Motor Specifications" on p. 4-86 in this catalog for details about asterisks 1 to 3.

Electromagnetic brake specifications (Note 1)

Model		HK-KT	23UWB	43UWB	7M3WB	103WB
Type (Note 3)			Spring actuated type safety brake			
Rated voltage (Note 4)			24 V DC (-10 % to 0 %)			
Power consumption		[W] at 20 °C	8.2		10	
Electromagnetic brake static friction torque (Note 5)		[N•m]	1.3 or higher		3.2 or higher	
Permissible braking work	Per braking	[J]	22		64	
	Per hour	[J]	220		640	
Electromagnetic brake life (Note 2)	Number of braking times		20000			
	Work per braking	[J]	22		64	

Notes: 1. The electromagnetic brake is for holding. It cannot be used for deceleration applications.
2. Brake lining wear due to braking will increase the brake gap, but the gap is not adjustable. Therefore, the brake life indicates the number of times the brake can be applied before gap adjustment becomes necessary.
3. This type does not have a manual release mechanism. Use a 24 V DC power supply to release the brake electrically.
4. Prepare a power supply exclusively for the electromagnetic brake.
5. The value of the brake static friction torque is the lower limit in the initial state at 20 °C.

HK-KT_W (Low Inertia, Small Capacity)

Specifications when connected with a 200 V servo amplifier

Flange size		[mm]	90 × 90					
Rotary servo motor model		HK-KT	63UW	7M3UW	103UW	153W	203W	202W
Continuous running duty (Note 4)	Rated output	[kW]	0.6	0.75	1.0	1.5	2.0	2.0
	Rated torque (Note 3, 5)	[N•m]	1.9 (2.4)	2.4	3.2	4.8	6.4	9.5
Maximum torque (Note 3)		[N•m]	6.3 (10.3)	8.4 (10.7)	11.1 (14.3)	16.7 (21.5)	19.1 (25.5)	28.6 (38.2)
Rated speed (Note 3, 4)		[r/min]	3000 (2400)	3000				2000
Maximum speed (Note 3, 4)		[r/min]	6000 (6700)	6700	6000	6700	6000	3000
Power rate at continuous rated torque (Note 3) [kW/s]	Without electromagnetic brake		17.3 (27.0)	27.0	37.0	52.0	71.7	111
	With electromagnetic brake		14.9 (23.3)	23.3	32.9	48.3	67.7	107
Rated current (Note 3)		[A]	3.2 (4.0)	4.0	4.9	8.7	11	9.0
Maximum current (Note 3)		[A]	12 (20)	16 (22)	21 (27)	34 (46)	34 (48)	30 (41)
Moment of inertia J [× 10^{-4} kg•m^2]	Without electromagnetic brake		2.11		2.74	4.38	5.65	8.18
	With electromagnetic brake		2.45		3.08	4.72	5.99	8.53
Recommended load to motor inertia ratio (Note 1)			10 times or less		15 times or less			
Speed/position detector			Batteryless absolute/incremental 26-bit encoder (resolution: 67,108,864 pulses/rev)					
Type			Permanent magnet synchronous motor					
Oil seal			None (Servo motors with an oil seal are available.)					
Electromagnetic brake			None (Servo motors with an electromagnetic brake are available.)					
Thermistor			None					
Insulation class			155 (F)					
Structure			Totally enclosed, natural cooling (IP rating: IP67) (Note 2, 6)					
Vibration resistance *1		[m/s^2]	X: 24.5, Y: 49			X: 24.5, Y: 24.5		
Vibration rank			V10 *3					
Permissible load for the shaft *2	L	[mm]	40					
	Radial	[N]	392					
	Thrust	[N]	147					
Mass [kg]	Without electromagnetic brake		2.3		2.7	3.6	4.4	5.9
	With electromagnetic brake		2.9		3.3	4.7	5.5	7.0

Notes: 1. Contact your local sales office if the load to motor inertia ratio exceeds the value in the table.
2. The shaft-through portion is excluded. Refer to the asterisk 4 of "Annotations for Rotary Servo Motor Specifications" on p. 4-86 in this catalog for the shaft-through portion.
3. The values in brackets are applicable when the torque is increased by combining a larger-capacity servo amplifier. Refer to "Combinations of Rotary Servo Motors and Servo Amplifiers" in this catalog for the available combinations.
4. The continuous running duty and the speed are not guaranteed when the power supply voltage is dropped.
5. When unbalanced torque is generated, such as in a vertical lift machine, keep the unbalanced torque of the machine under 70 % of the servo motor rated torque.
6. When IP67 cables are required, please contact Mitsubishi Electric System & Service Co., Ltd. OVERSEAS SERVICE SECTION. (Email: osb.webmaster@melsc.jp)

Refer to "Annotations for Rotary Servo Motor Specifications" on p. 4-86 in this catalog for details about asterisks 1 to 3.

Electromagnetic brake specifications (Note 1)

Model		HK-KT	63UWB	7M3UWB	103UWB	153WB	203WB	202WB
Type (Note 3)			Spring actuated type safety brake					
Rated voltage (Note 4)			24 V DC (-10 % to 0 %)					
Power consumption		[W] at 20 °C	9.0			13.8		
Electromagnetic brake static friction torque (Note 5)		[N•m]	3.2 or higher			9.5 or higher		
Permissible braking work	Per braking	[J]	66			64		
	Per hour	[J]	660			640		
Electromagnetic brake life (Note 2)	Number of braking times		20000			5000		
	Work per braking	[J]	33			64		

Notes: 1. The electromagnetic brake is for holding. It cannot be used for deceleration applications.
2. Brake lining wear due to braking will increase the brake gap, but the gap is not adjustable. Therefore, the brake life indicates the number of times the brake can be applied before gap adjustment becomes necessary.
3. This type does not have a manual release mechanism. Use a 24 V DC power supply to release the brake electrically.
4. Prepare a power supply exclusively for the electromagnetic brake.
5. The value of the brake static friction torque is the lower limit in the initial state at 20 °C.

HK-KT_4_W (Low Inertia, Small Capacity)

Specifications when connected with a 200 V servo amplifier

Flange size		[mm]	60 × 60		80 × 80		90 × 90		
Rotary servo motor model		HK-KT	434W	634W	7M34W	1034W	1534W	2034W	2024W
Continuous running duty (Note 4)	Rated output	[kW]	0.2	0.3	0.375	0.5	0.75	1.0	1.0
	Rated torque (Note 5)	[N•m]	1.3	1.9	2.4	3.2	4.8	6.4	9.5
Maximum torque (Note 3)		[N•m]	4.5 (5.7)	6.7 (8.6)	8.4 (10.7)	11.1 (14.3)	19.1 (21.5)	22.3 (25.5)	38.2
Rated speed (Note 4)		[r/min]	1500						1000
Maximum speed (Note 4)		[r/min]	3500			3000			1500
Power rate at continuous rated torque [kW/s]	Without electromagnetic brake		39.5	61.0	41.6	60.3	52.0	71.7	111
	With electromagnetic brake		36.7	58.0	37.7	56.0	48.3	67.7	107
Rated current		[A]	1.3	2.3	2.4	2.5	4.4	5.3	4.5
Maximum current (Note 3)		[A]	4.9 (6.6)	9.1 (13)	9.7 (13)	11 (14)	20 (23)	21 (24)	21
Moment of inertia J [× 10^{-4} kg•m^2]	Without electromagnetic brake		0.410	0.598	1.37	1.68	4.38	5.65	8.18
	With electromagnetic brake		0.442	0.629	1.51	1.81	4.72	5.99	8.53
Recommended load to motor inertia ratio (Note 1)			25 times or less		17 times or less		15 times or less		
Speed/position detector			Batteryless absolute/incremental 26-bit encoder (resolution: 67,108,864 pulses/rev)						
Type			Permanent magnet synchronous motor						
Oil seal			None (Servo motors with an oil seal are available.)						
Electromagnetic brake			None (Servo motors with an electromagnetic brake are available.)						
Thermistor			None						
Insulation class			155 (F)						
Structure			Totally enclosed, natural cooling (IP rating: IP67) (Note 2, 6)						
Vibration resistance *1		[m/s^2]	X: 49, Y: 49				X: 24.5, Y: 24.5		
Vibration rank			V10 *3						
Permissible load for the shaft *2	L	[mm]	30		40				
	Radial	[N]	245		392				
	Thrust	[N]	98		147				
Mass [kg]	Without electromagnetic brake		1.2	1.5	2.2	2.4	3.6	4.4	5.9
	With electromagnetic brake		1.6	1.9	2.9	3.1	4.7	5.5	7.0

Notes: 1. Contact your local sales office if the load to motor inertia ratio exceeds the value in the table.
2. The shaft-through portion is excluded. Refer to the asterisk 4 of "Annotations for Rotary Servo Motor Specifications" on p. 4-86 in this catalog for the shaft-through portion.
3. The values in brackets are applicable when the torque is increased by combining a larger-capacity servo amplifier. Refer to "Combinations of Rotary Servo Motors and Servo Amplifiers" in this catalog for the available combinations.
4. The continuous running duty and the speed are not guaranteed when the power supply voltage is dropped.
5. When unbalanced torque is generated, such as in a vertical lift machine, keep the unbalanced torque of the machine under 70 % of the servo motor rated torque.
6. When IP67 cables are required, please contact Mitsubishi Electric System & Service Co., Ltd. OVERSEAS SERVICE SECTION. (Email: osb.webmaster@melsc.jp)

Refer to "Annotations for Rotary Servo Motor Specifications" on p. 4-86 in this catalog for details about asterisks 1 to 3.

Electromagnetic brake specifications (Note 1)

Model		HK-KT	434WB	634WB	7M34WB	1034WB	1534WB	2034WB	2024WB
Type (Note 3)			Spring actuated type safety brake						
Rated voltage (Note 4)			24 V DC (-10 % to 0 %)						
Power consumption		[W] at 20 °C	7.9		10		13.8		
Electromagnetic brake static friction torque (Note 5)		[N•m]	1.9 or higher		3.2 or higher		9.5 or higher		
Permissible braking work	Per braking	[J]	22		64				
	Per hour	[J]	220		640				
Electromagnetic brake life (Note 2)	Number of braking times		20000				5000		
	Work per braking	[J]	22		64				

Notes: 1. The electromagnetic brake is for holding. It cannot be used for deceleration applications.
2. Brake lining wear due to braking will increase the brake gap, but the gap is not adjustable. Therefore, the brake life indicates the number of times the brake can be applied before gap adjustment becomes necessary.
3. This type does not have a manual release mechanism. Use a 24 V DC power supply to release the brake electrically.
4. Prepare a power supply exclusively for the electromagnetic brake.
5. The value of the brake static friction torque is the lower limit in the initial state at 20 °C.

HK-KT_W (Low Inertia, Small Capacity)

Specifications when connected with a 400 V servo amplifier

Flange size		[mm]	40 × 40		
Rotary servo motor model		HK-KT	053W	13W	1M3W
Continuous running duty (Note 4)	Rated output	[kW]	0.05	0.1	0.15
	Rated torque (Note 5)	[N•m]	0.16 (Note 6)	0.32	0.48
Maximum torque (Note 3)		[N•m]	0.56 (0.72)	1.1 (1.4)	1.7 (2.1)
Rated speed (Note 4)		[r/min]	3000		
Maximum speed (Note 4)		[r/min]	6700		
Power rate at continuous rated torque [kW/s]	Without electromagnetic brake		6.4	14.8	23.3
	With electromagnetic brake		5.8	14.0	22.4
Rated current		[A]	1.3	1.2	1.2
Maximum current (Note 3)		[A]	4.6 (6.2)	4.6 (6.0)	4.5 (6.0)
Moment of inertia J [× 10^{-4} kg•m^2]	Without electromagnetic brake		0.0394	0.0686	0.0977
	With electromagnetic brake		0.0434	0.0725	0.102
Recommended load to motor inertia ratio (Note 1)	MR-J5		20 times or less		
	MR-J5D		20 times or less		
Speed/position detector			Batteryless absolute/incremental 26-bit encoder (resolution: 67,108,864 pulses/rev)		
Type			Permanent magnet synchronous motor		
Oil seal			None (Servo motors with an oil seal are available.) (Note 6)		
Electromagnetic brake			None (Servo motors with an electromagnetic brake are available.)		
Thermistor			None		
Insulation class			155 (F)		
Structure			Totally enclosed, natural cooling (IP rating: IP67) (Note 2, 7)		
Vibration resistance *1		[m/s^2]	X: 49, Y: 49		
Vibration rank			V10 *3		
Permissible load for the shaft *2	L	[mm]	25		
	Radial	[N]	88		
	Thrust	[N]	59		
Mass [kg]	Without electromagnetic brake		0.27	0.37	0.47
	With electromagnetic brake		0.53	0.63	0.73

Notes: 1. Contact your local sales office if the load to motor inertia ratio exceeds the value in the table.
2. The shaft-through portion is excluded. Refer to the asterisk 4 of "Annotations for Rotary Servo Motor Specifications" on p. 4-86 in this catalog for the shaft-through portion.
3. The values in brackets are applicable when the torque is increased by combining a larger-capacity servo amplifier. Refer to "Combinations of Rotary Servo Motors and Servo Amplifiers" in this catalog for the available combinations.
4. The continuous running duty and the speed are not guaranteed when the power supply voltage is dropped.
5. When unbalanced torque is generated, such as in a vertical lift machine, keep the unbalanced torque of the machine under 70 % of the servo motor rated torque.
6. For HK-KT053W_J_ (with an oil seal), use the servo motor at a derating rate of 80 %.
7. When IP67 cables are required, please contact Mitsubishi Electric System & Service Co., Ltd. OVERSEAS SERVICE SECTION. (Email: osb.webmaster@melsc.jp)

Refer to "Annotations for Rotary Servo Motor Specifications" on p. 4-86 in this catalog for details about asterisks 1 to 3.

Electromagnetic brake specifications (Note 1)

Model		HK-KT	053WB	13WB	1M3WB
Type (Note 3)			Spring actuated type safety brake		
Rated voltage (Note 4)			24 V DC (-10 % to 0 %)		
Power consumption		[W] at 20 °C	6.4		
Electromagnetic brake static friction torque (Note 5)		[N•m]	0.48 or higher		
Permissible braking work	Per braking	[J]	5.6		
	Per hour	[J]	56		
Electromagnetic brake life (Note 2)	Number of braking times		20000		
	Work per braking	[J]	5.6		

Notes: 1. The electromagnetic brake is for holding. It cannot be used for deceleration applications.
2. Brake lining wear due to braking will increase the brake gap, but the gap is not adjustable. Therefore, the brake life indicates the number of times the brake can be applied before gap adjustment becomes necessary.
3. This type does not have a manual release mechanism. Use a 24 V DC power supply to release the brake electrically.
4. Prepare a power supply exclusively for the electromagnetic brake.
5. The value of the brake static friction torque is the lower limit in the initial state at 20 °C.

HK-KT_4_W (Low Inertia, Small Capacity)

Specifications when connected with a 400 V servo amplifier

Flange size			[mm]	60 × 60		80 × 80	
Rotary servo motor model			HK-KT	434W	634W	7M34W	1034W
Continuous running duty (Note 4)	Rated output		[kW]	0.4	0.6	0.75	1.0
	Rated torque (Note 5)		[N•m]	1.3	1.9	2.4	3.2
Maximum torque (Note 3)			[N•m]	4.5 (5.7)	6.7 (8.6)	8.4 (10.7)	11.1 (14.3)
Rated speed (Note 4)			[r/min]	3000			
Maximum speed (Note 4)			[r/min]	6700			6500
Power rate at continuous rated torque [kW/s]	Without electromagnetic brake			39.5	61.0	41.6	60.3
	With electromagnetic brake			36.7	58.0	37.7	56.0
Rated current			[A]	1.3	2.3	2.4	2.5
Maximum current (Note 3)			[A]	4.9 (6.6)	9.1 (13)	9.7 (13)	10 (14)
Moment of inertia J [× 10^{-4} kg•m^2]	Without electromagnetic brake			0.410	0.598	1.37	1.68
	With electromagnetic brake			0.442	0.629	1.51	1.81
Recommended load to motor inertia ratio (Note 1)		MR-J5		23 times or less	20 times or less (Note 7)	9 times or less (Note 8)	7 times or less (Note 7)
		MR-J5D		23 times or less	30 times or less	20 times or less	30 times or less
Speed/position detector				Batteryless absolute/incremental 26-bit encoder (resolution: 67,108,864 pulses/rev)			
Type				Permanent magnet synchronous motor			
Oil seal				None (Servo motors with an oil seal are available.)			
Electromagnetic brake				None (Servo motors with an electromagnetic brake are available.)			
Thermistor				None			
Insulation class				155 (F)			
Structure				Totally enclosed, natural cooling (IP rating: IP67) (Note 2, 6)			
Vibration resistance *1			[m/s^2]	X: 49, Y: 49			
Vibration rank				V10 *3			
Permissible load for the shaft *2	L		[mm]	30		40	
	Radial		[N]	245		392	
	Thrust		[N]	98		147	
Mass [kg]	Without electromagnetic brake			1.2	1.5	2.2	2.4
	With electromagnetic brake			1.6	1.9	2.9	3.1

Notes:
1. Contact your local sales office if the load to motor inertia ratio exceeds the value in the table.
2. The shaft-through portion is excluded. Refer to the asterisk 4 of "Annotations for Rotary Servo Motor Specifications" on p. 4-86 in this catalog for the shaft-through portion.
3. The values in brackets are applicable when the torque is increased by combining a larger-capacity servo amplifier. Refer to "Combinations of Rotary Servo Motors and Servo Amplifiers" in this catalog for the available combinations.
4. The continuous running duty and the speed are not guaranteed when the power supply voltage is dropped.
5. When unbalanced torque is generated, such as in a vertical lift machine, keep the unbalanced torque of the machine under 70 % of the servo motor rated torque.
6. When IP67 cables are required, please contact Mitsubishi Electric System & Service Co., Ltd. OVERSEAS SERVICE SECTION. (Email: osb.webmaster@melsc.jp)
7. When the speed is 3000 r/min or less, the recommended load to motor inertia ratio is 30 times or less.
8. When the speed is 3000 r/min or less, the recommended load to motor inertia ratio is 20 times or less.

Refer to "Annotations for Rotary Servo Motor Specifications" on p. 4-86 in this catalog for details about asterisks 1 to 3.

Electromagnetic brake specifications (Note 1)

Model			HK-KT	434WB	634WB	7M34WB	1034WB
Type (Note 3)				Spring actuated type safety brake			
Rated voltage (Note 4)				24 V DC (-10 % to 0 %)			
Power consumption			[W] at 20 °C	7.9		10	
Electromagnetic brake static friction torque (Note 5)			[N•m]	1.9 or higher		3.2 or higher	
Permissible braking work	Per braking		[J]	22		64	
	Per hour		[J]	220		640	
Electromagnetic brake life (Note 2)	Number of braking times			20000			
	Work per braking		[J]	22		64	

Notes:
1. The electromagnetic brake is for holding. It cannot be used for deceleration applications.
2. Brake lining wear due to braking will increase the brake gap, but the gap is not adjustable. Therefore, the brake life indicates the number of times the brake can be applied before gap adjustment becomes necessary.
3. This type does not have a manual release mechanism. Use a 24 V DC power supply to release the brake electrically.
4. Prepare a power supply exclusively for the electromagnetic brake.
5. The value of the brake static friction torque is the lower limit in the initial state at 20 °C.

HK-KT_4_W (Low Inertia, Small Capacity)

Specifications when connected with a 400 V servo amplifier

Flange size			[mm]	90 × 90				
Rotary servo motor model			HK-KT	634UW	1034UW	1534W	2034W	2024W
Continuous running duty (Note 4)	Rated output		[kW]	0.6	1.0	1.5	2.0	2.0
	Rated torque (Note 3, 5)		[N•m]	1.9 (2.4)	3.2	4.8	6.4	9.5
Maximum torque (Note 3)			[N•m]	6.3 (10.3)	11.1 (14.3)	16.7 (21.5)	19.1 (25.5)	28.6 (38.2)
Rated speed (Note 3, 4)			[r/min]	3000 (2400)	3000			2000
Maximum speed (Note 3, 4)			[r/min]	6000 (6700)	6000	6700	6000	3000
Power rate at continuous rated torque (Note 3) [kW/s]	Without electromagnetic brake			17.3 (27.0)	37.0	52.0	71.7	111
	With electromagnetic brake			14.9 (23.3)	32.9	48.3	67.7	107
Rated current (Note 3)			[A]	1.6 (2.0)	2.5	4.4	5.3	4.5
Maximum current (Note 3)			[A]	5.6 (9.7)	9.7 (14)	17 (23)	17 (24)	15 (21)
Moment of inertia J [× 10^{-4} kg•m^2]	Without electromagnetic brake			2.11	2.74	4.38	5.65	8.18
	With electromagnetic brake			2.45	3.08	4.72	5.99	8.53
Recommended load to motor inertia ratio (Note 1)		MR-J5		10 times or less		11 times or less (Note 7)	10 times or less (Note 7)	15 times or less
		MR-J5D		10 times or less		10 times or less	9 times or less	15 times or less
Speed/position detector				Batteryless absolute/incremental 26-bit encoder (resolution: 67,108,864 pulses/rev)				
Type				Permanent magnet synchronous motor				
Oil seal				None (Servo motors with an oil seal are available.)				
Electromagnetic brake				None (Servo motors with an electromagnetic brake are available.)				
Thermistor				None				
Insulation class				155 (F)				
Structure				Totally enclosed, natural cooling (IP rating: IP67) (Note 2, 6)				
Vibration resistance *1			[m/s^2]	X: 24.5, Y: 49		X: 24.5, Y: 24.5		
Vibration rank				V10 *3				
Permissible load for the shaft *2	L		[mm]	40				
	Radial		[N]	392				
	Thrust		[N]	147				
Mass [kg]	Without electromagnetic brake			2.3	2.7	3.6	4.4	5.9
	With electromagnetic brake			2.9	3.3	4.7	5.5	7.0

Notes: 1. Contact your local sales office if the load to motor inertia ratio exceeds the value in the table.
2. The shaft-through portion is excluded. Refer to the asterisk 4 of "Annotations for Rotary Servo Motor Specifications" on p. 4-86 in this catalog for the shaft-through portion.
3. The values in brackets are applicable when the torque is increased by combining a larger-capacity servo amplifier. Refer to "Combinations of Rotary Servo Motors and Servo Amplifiers" in this catalog for the available combinations.
4. The continuous running duty and the speed are not guaranteed when the power supply voltage is dropped.
5. When unbalanced torque is generated, such as in a vertical lift machine, keep the unbalanced torque of the machine under 70 % of the servo motor rated torque.
6. When IP67 cables are required, please contact Mitsubishi Electric System & Service Co., Ltd. OVERSEAS SERVICE SECTION. (Email: osb.webmaster@melsc.jp)
7. When the speed is 3000 r/min or less, the recommended load to motor inertia ratio is 30 times or less.

Refer to "Annotations for Rotary Servo Motor Specifications" on p. 4-86 in this catalog for details about asterisks 1 to 3.

Electromagnetic brake specifications (Note 1)

Model			HK-KT	634UWB	1034UWB	1534WB	2034WB	2024WB
Type (Note 3)				Spring actuated type safety brake				
Rated voltage (Note 4)				24 V DC (-10 % to 0 %)				
Power consumption		[W] at 20 °C		9.0		13.8		
Electromagnetic brake static friction torque (Note 5)			[N•m]	3.2 or higher		9.5 or higher		
Permissible braking work	Per braking		[J]	66		64		
	Per hour		[J]	660		640		
Electromagnetic brake life (Note 2)	Number of braking times			20000		5000		
	Work per braking		[J]	33		64		

Notes: 1. The electromagnetic brake is for holding. It cannot be used for deceleration applications.
2. Brake lining wear due to braking will increase the brake gap, but the gap is not adjustable. Therefore, the brake life indicates the number of times the brake can be applied before gap adjustment becomes necessary.
3. This type does not have a manual release mechanism. Use a 24 V DC power supply to release the brake electrically.
4. Prepare a power supply exclusively for the electromagnetic brake.
5. The value of the brake static friction torque is the lower limit in the initial state at 20 °C.

HK-KT_W Torque Characteristics (Note 1)

When connected with a 200 V servo amplifier

: For 3-phase 200 V AC
: For 1-phase 200 V AC

HK-KT053W
Standard torque

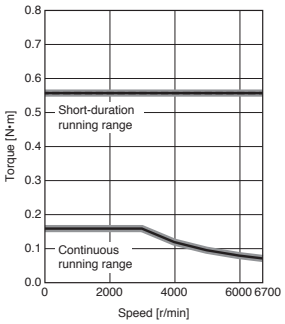

HK-KT053W
Torque increased

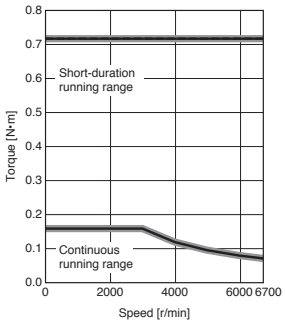

HK-KT13W
Standard torque

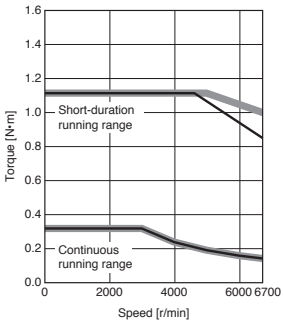

HK-KT13W
Torque increased

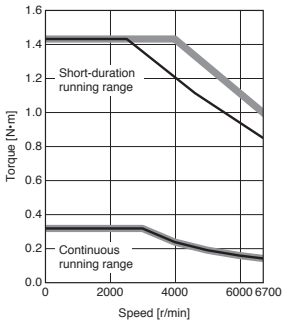

HK-KT1M3W
Standard torque

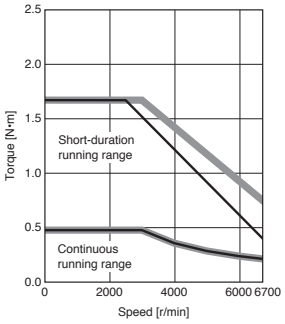

HK-KT1M3W
Torque increased

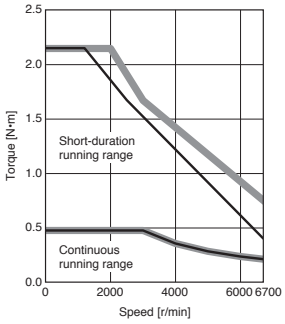

HK-KT13UW
Standard torque

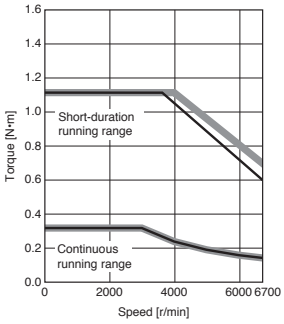

HK-KT13UW
Torque increased

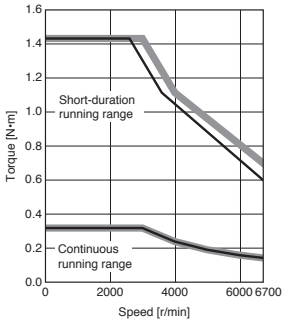

HK-KT23W
Standard torque

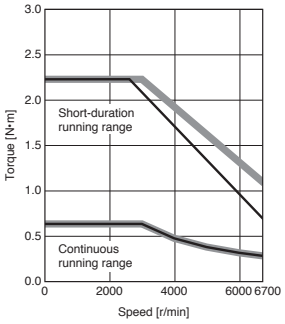

HK-KT23W
Torque increased

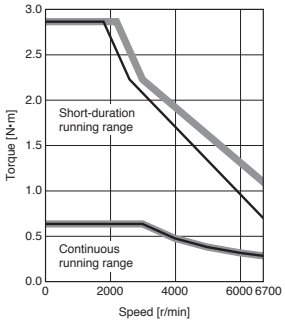

HK-KT43W
Standard torque

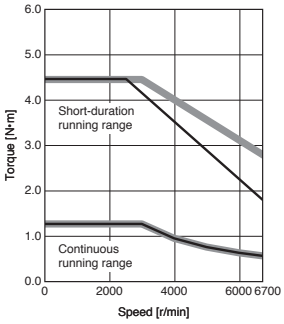

HK-KT43W
Torque increased

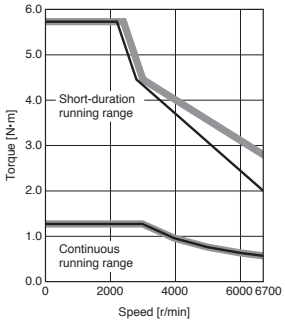

HK-KT63W
Standard torque

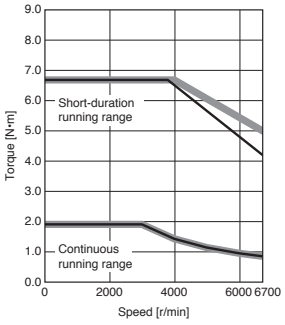

HK-KT63W
Torque increased

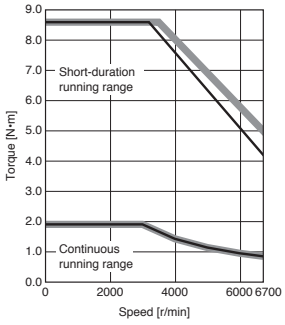

Notes: 1. Torque drops when the power supply voltage is below the specified value.

HK-KT_W Torque Characteristics (Note 1)

When connected with a 200 V servo amplifier

: For 3-phase 200 V AC
: For 1-phase 200 V AC

HK-KT23UW
Standard torque

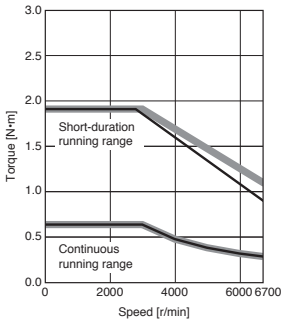

HK-KT23UW
Torque increased

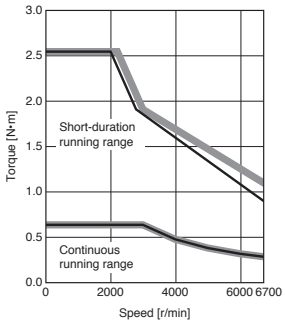

HK-KT43UW
Standard torque

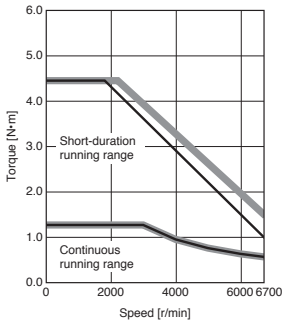

HK-KT43UW
Torque increased

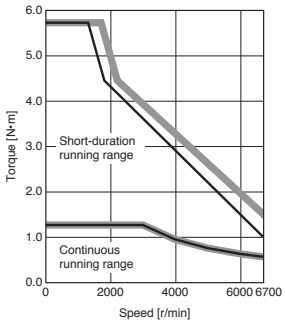

HK-KT7M3W
Standard torque

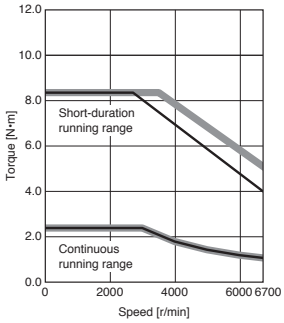

HK-KT7M3W
Torque increased

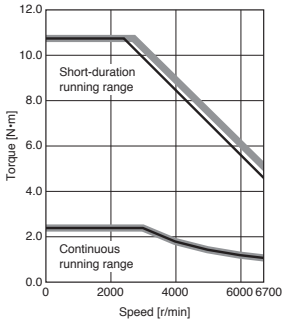

HK-KT103W (Note 2)
Standard torque

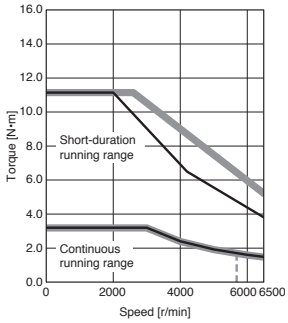

HK-KT103W (Note 2)
Torque increased

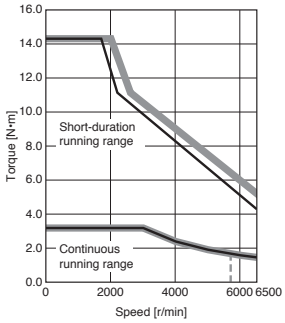

Notes: 1. Torque drops when the power supply voltage is below the specified value. - - - - : A rough indication of the possible continuous running range for 3-phase 170 V AC
2. When using a combination of the servo motors of over 750 W and MR-J5-100_ or MR-J5-200_ with a 1-phase power supply, use the servo amplifiers at 75 % or less of the effective load ratio.

HK-KT_W Torque Characteristics (Note 1)

When connected with a 200 V servo amplifier

: For 3-phase 200 V AC
: For 1-phase 200 V AC

HK-KT63UW
Standard torque

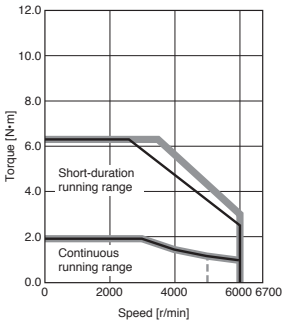

HK-KT63UW
Torque increased

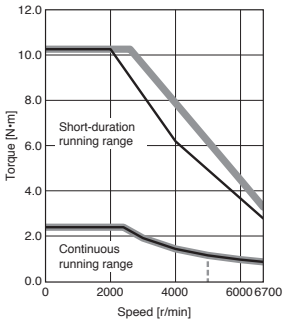

HK-KT7M3UW
Standard torque

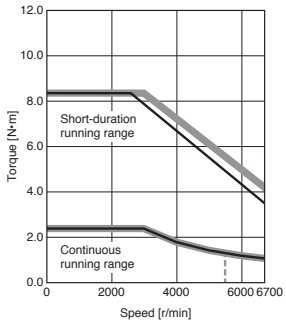

HK-KT7M3UW
Torque increased

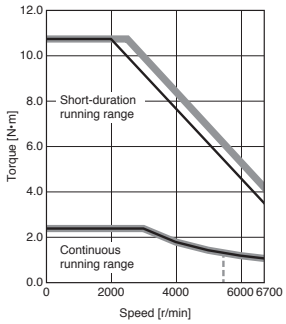

HK-KT103UW (Note 2)
Standard torque

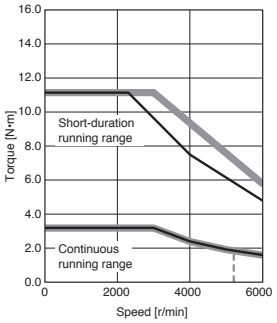

HK-KT103UW (Note 2)
Torque increased

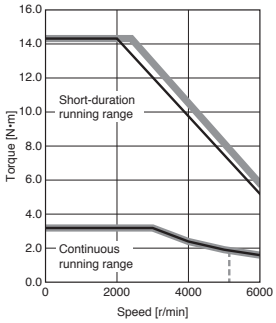

HK-KT153W (Note 2)
Standard torque

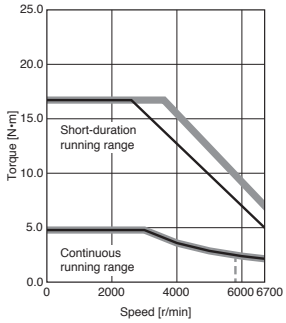

HK-KT153W
Torque increased

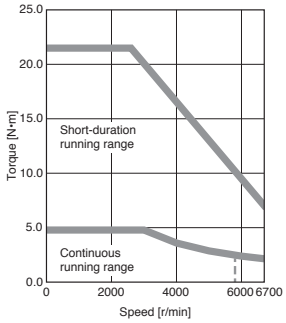

HK-KT203W (Note 2)
Standard torque

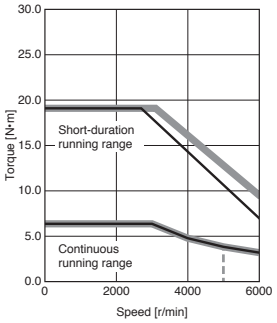

HK-KT203W
Torque increased

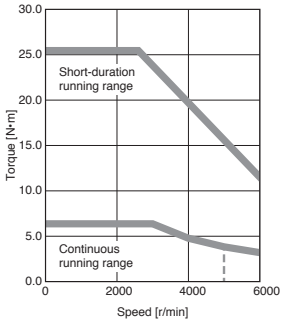

HK-KT202W (Note 2)
Standard torque

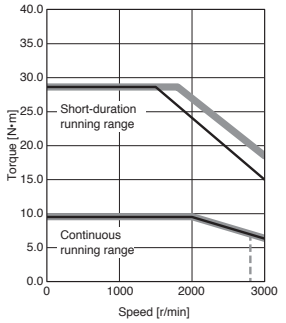

HK-KT202W
Torque increased

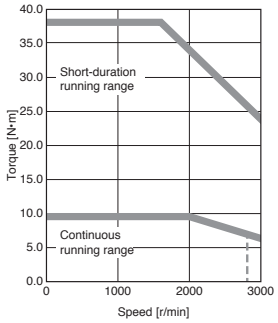

Notes: 1. Torque drops when the power supply voltage is below the specified value. - - - - : A rough indication of the possible continuous running range for 3-phase 170 V AC
2. When using a combination of the servo motors of over 750 W and MR-J5-100_ or MR-J5-200_ with a 1-phase power supply, use the servo amplifiers at 75 % or less of the effective load ratio.

HK-KT_4_W Torque Characteristics (Note 1)

When connected with a 200 V servo amplifier

: For 3-phase 200 V AC
: For 1-phase 200 V AC

HK-KT434W
Standard torque

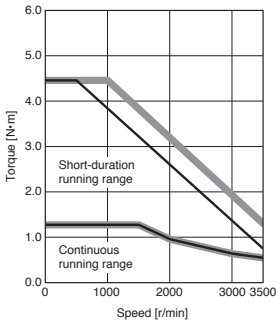

HK-KT434W
Torque increased

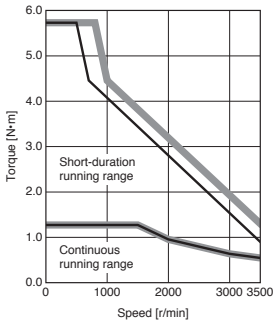

HK-KT634W
Standard torque

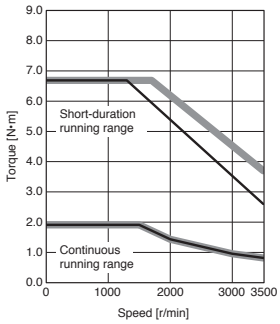

HK-KT634W
Torque increased

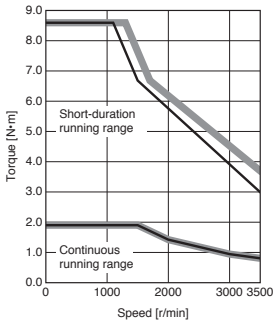

HK-KT7M34W
Standard torque

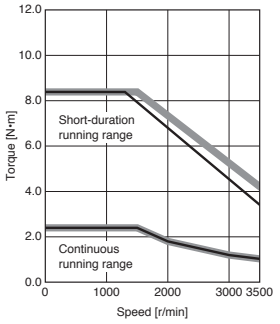

HK-KT7M34W
Torque increased

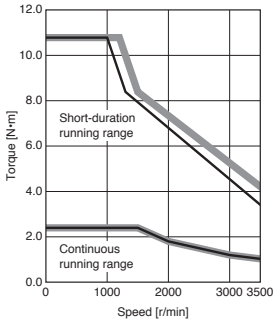

HK-KT1034W
Standard torque

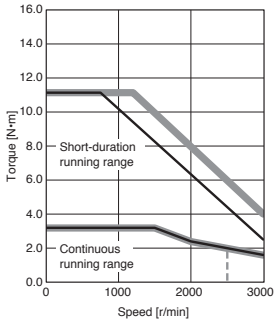

HK-KT1034W
Torque increased

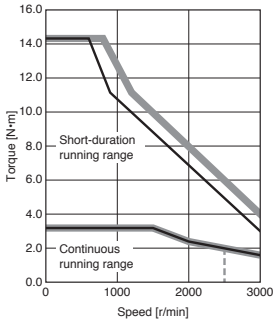

HK-KT1534W
Standard torque

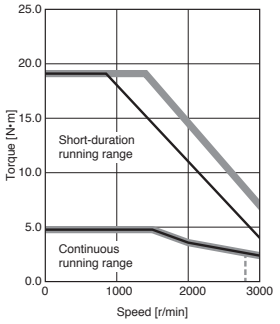

HK-KT1534W
Torque increased

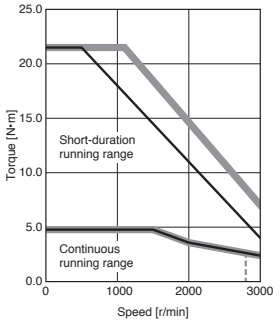

HK-KT2034W (Note 2)
Standard torque

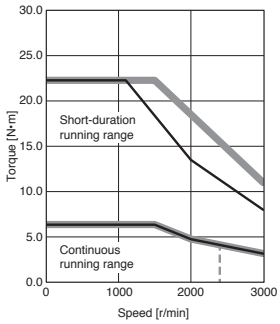

HK-KT2034W (Note 2)
Torque increased

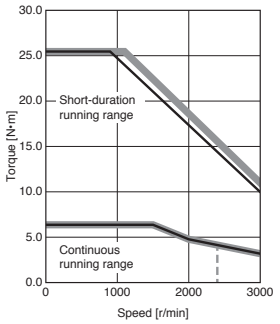

HK-KT2024W (Note 2)
Standard torque

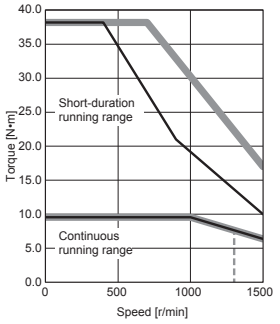

Notes: 1. Torque drops when the power supply voltage is below the specified value. - - - - : A rough indication of the possible continuous running range for 3-phase 170 V AC
2. When using a combination of the servo motors of over 750 W and MR-J5-100_ or MR-J5-200_ with a 1-phase power supply, use the servo amplifiers at 75 % or less of the effective load ratio.

HK-KT_W Torque Characteristics (Note 1)

When connected with a 400 V servo amplifier

: For 3-phase 400 V AC
: For 3-phase 380 V AC

HK-KT053W
Standard torque

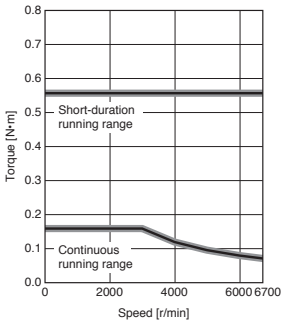

HK-KT053W
Torque increased

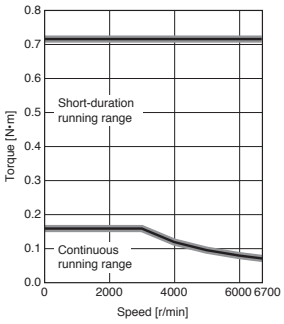

HK-KT13W
Standard torque

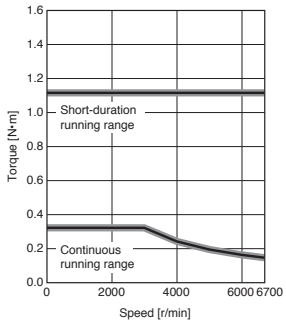

HK-KT13W
Torque increased

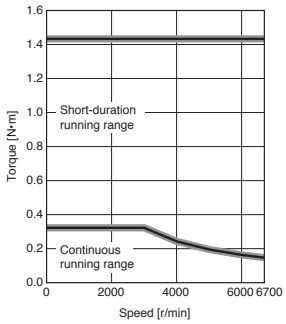

HK-KT1M3W
Standard torque

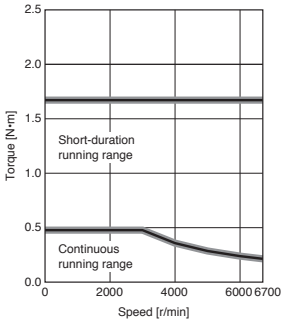

HK-KT1M3W
Torque increased

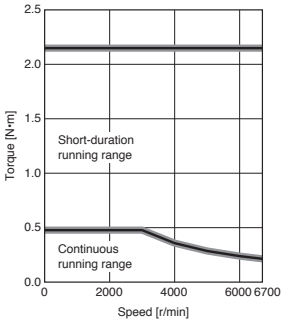

Notes: 1. Torque drops when the power supply voltage is below the specified value.

HK-KT_4_W Torque Characteristics (Note 1)

When connected with a 400 V servo amplifier

: For 3-phase 400 V AC
: For 3-phase 380 V AC

HK-KT434W
Standard torque

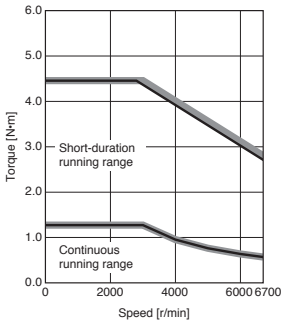

HK-KT434W
Torque increased

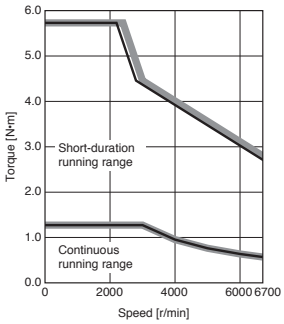

HK-KT634W
Standard torque

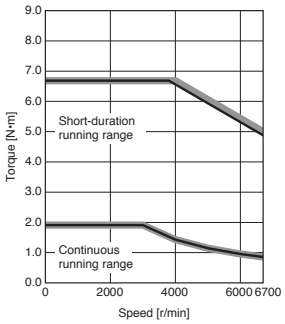

HK-KT634W
Torque increased

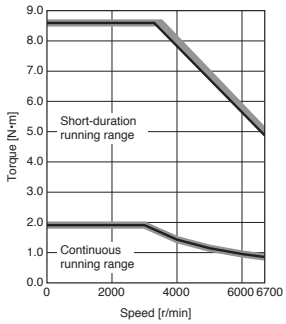

HK-KT7M34W
Standard torque

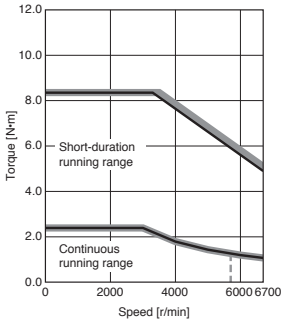

HK-KT7M34W
Torque increased

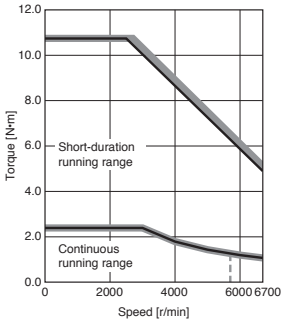

HK-KT1034W
Standard torque

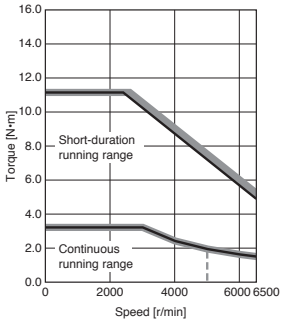

HK-KT1034W
Torque increased

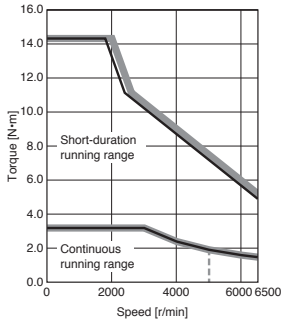

Notes: 1. Torque drops when the power supply voltage is below the specified value. - - - - : A rough indication of the possible continuous running range for 3-phase 323 V AC

HK-KT_4_W Torque Characteristics (Note 1)

When connected with a 400 V servo amplifier

: For 3-phase 400 V AC
: For 3-phase 380 V AC

HK-KT634UW
Standard torque

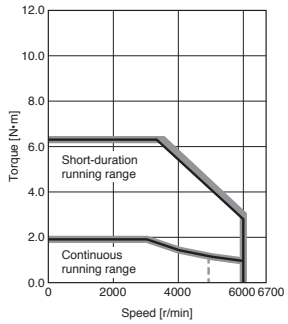

HK-KT634UW
Torque increased

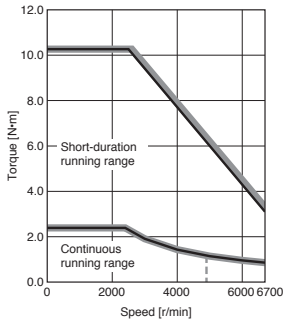

HK-KT1034UW
Standard torque

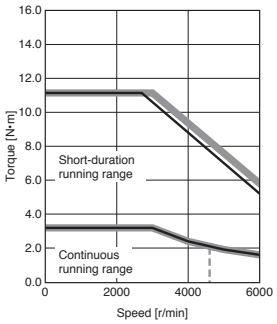

HK-KT1034UW
Torque increased

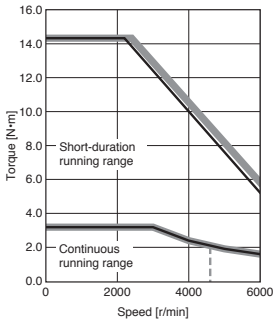

HK-KT1534W
Standard torque

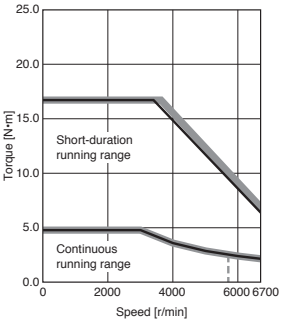

HK-KT1534W
Torque increased

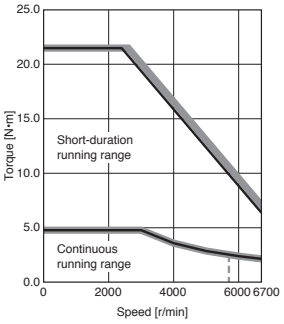

HK-KT2034W
Standard torque

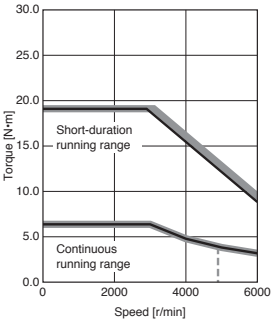

HK-KT2034W
Torque increased

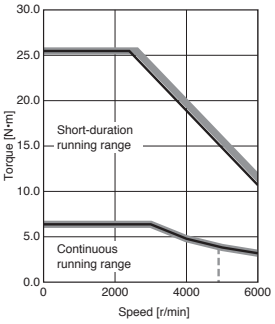

HK-KT2024W
Standard torque

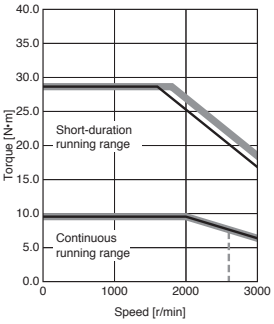

HK-KT2024W
Torque increased

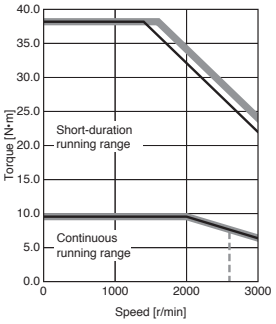

Notes: 1. Torque drops when the power supply voltage is below the specified value. - - - - : A rough indication of the possible continuous running range for 3-phase 323 V AC

HK-KT Series Dimensions (Note 3, 4, 5)

HK-KT053W(B), HK-KT13W(B), HK-KT1M3W(B)

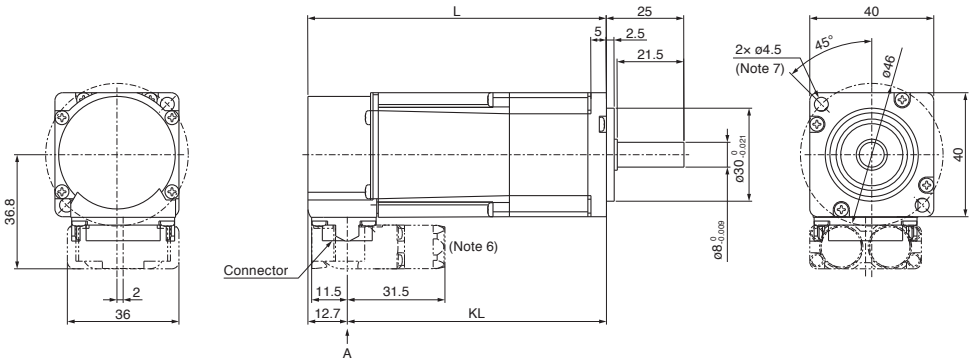

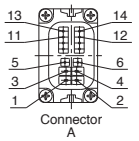

Electromagnetic brake (Note 2)

Pin No.	Signal name
5	B1
6	B2

Power supply

Pin No.	Signal name
1	E
2	U
3	W
4	V

Encoder

Pin No.	Signal name
11	P5
12	MR
13	LG
14	MRR

Model	Variable dimensions (Note 1)	
	L	KL
HK-KT053W(B)	55.5 (90.5)	42.8 (77.8)
HK-KT13W(B)	68 (103)	55.3 (90.3)
HK-KT1M3W(B)	80.5 (115.5)	67.8 (102.8)

[Unit: mm]

HK-KT13UW(B)

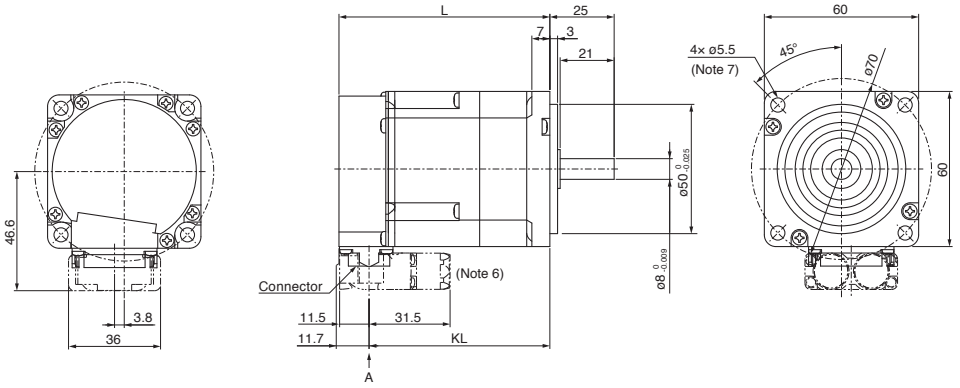

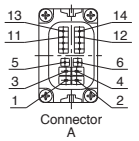

Electromagnetic brake (Note 2)

Pin No.	Signal name
5	B1
6	B2

Power supply

Pin No.	Signal name
1	E
2	U
3	W
4	V

Encoder

Pin No.	Signal name
11	P5
12	MR
13	LG
14	MRR

Model	Variable dimensions (Note 1)	
	L	KL
HK-KT13UW(B)	58.5 (82)	46.8 (70.3)

[Unit: mm]

Notes:
1. The dimensions in brackets are for the models with an electromagnetic brake.
2. The electromagnetic brake terminals do not have polarity.
3. The dimensions are the same regardless of whether or not an oil seal is installed.
4. Use a friction coupling to fasten a load.
5. The actual dimensions may be up to 3 mm larger than those shown in the drawing because of shifting and variance of parts that occur during the assembly and manufacture of the rotary servo motors. The dimensions and tolerances shown are applicable at a temperature of 20 °C and may vary depending on the ambient temperature. Design the machine to allow for sufficient space.
6. The dimensions are applicable when a dual type motor cable is led to the load side. Refer to "HK-KT Series Connector Dimensions" in this catalog for the dimensions when leading the cable to the opposite to the load side or leading vertically and when using a single type motor cable.
7. Use hexagon socket head cap screws when mounting the servo motor.

HK-KT Series Dimensions (Note 3, 4, 5)

HK-KT23W(B), HK-KT43W(B), HK-KT63W(B),
HK-KT434W(B), HK-KT634W(B)

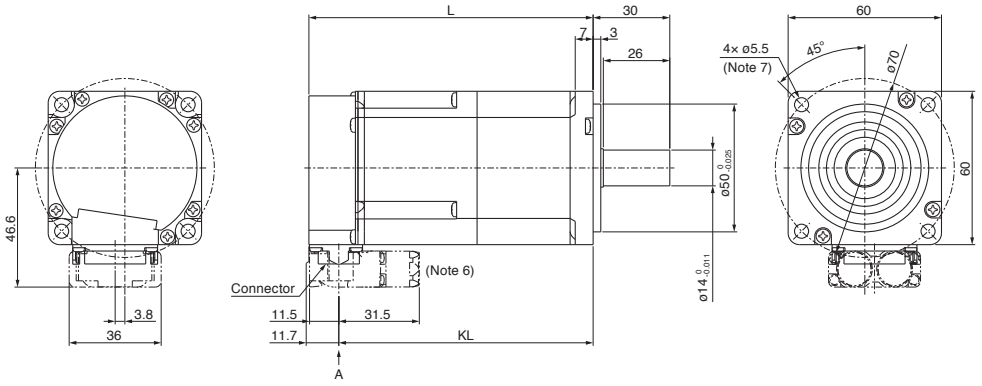

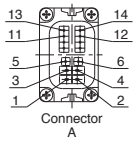

Electromagnetic brake (Note 2)

Pin No.	Signal name
5	B1
6	B2

Power supply

Pin No.	Signal name
1	E
2	U
3	W
4	V

Encoder

Pin No.	Signal name
11	P5
12	MR
13	LG
14	MRR

Model	Variable dimensions (Note 1)	
	L	KL
HK-KT23W(B)	67.5 (102.1)	55.8 (90.4)
HK-KT43W(B) HK-KT434W(B)	85.5 (120.1)	73.8 (108.4)
HK-KT63W(B) HK-KT634W(B)	103.5 (138.1)	91.8 (126.4)

[Unit: mm]

HK-KT23UW(B), HK-KT43UW(B)

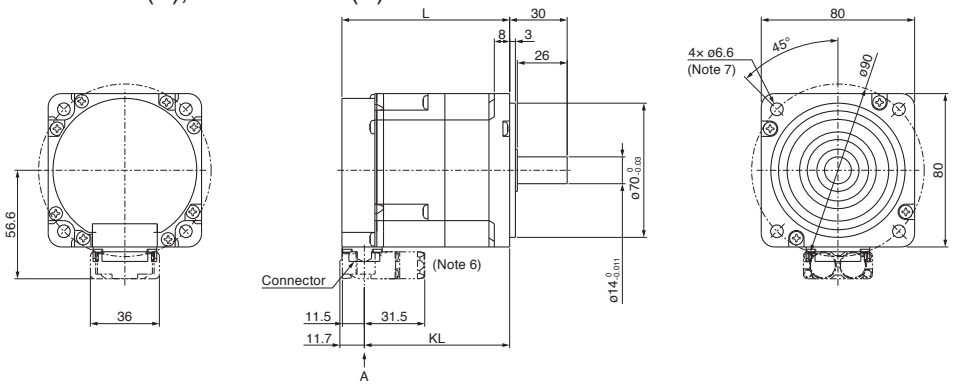

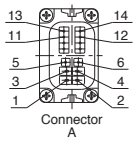

Electromagnetic brake (Note 2)

Pin No.	Signal name
5	B1
6	B2

Power supply

Pin No.	Signal name
1	E
2	U
3	W
4	V

Encoder

Pin No.	Signal name
11	P5
12	MR
13	LG
14	MRR

Model	Variable dimensions (Note 1)	
	L	KL
HK-KT23UW(B)	65.5 (87.5)	53.8 (75.8)
HK-KT43UW(B)	74.5 (96.5)	62.8 (84.8)

[Unit: mm]

Notes:
1. The dimensions in brackets are for the models with an electromagnetic brake.
2. The electromagnetic brake terminals do not have polarity.
3. The dimensions are the same regardless of whether or not an oil seal is installed.
4. Use a friction coupling to fasten a load.
5. The actual dimensions may be up to 3 mm larger than those shown in the drawing because of shifting and variance of parts that occur during the assembly and manufacture of the rotary servo motors. The dimensions and tolerances shown are applicable at a temperature of 20 °C and may vary depending on the ambient temperature. Design the machine to allow for sufficient space.
6. The dimensions are applicable when a dual type motor cable is led to the load side. Refer to "HK-KT Series Connector Dimensions" in this catalog for the dimensions when leading the cable to the opposite to the load side or leading vertically and when using a single type motor cable.
7. Use hexagon socket head cap screws when mounting the servo motor.

HK-KT Series Dimensions (Note 3, 4, 5)

HK-KT7M3W(B), HK-KT103W(B), HK-KT7M34W(B), HK-KT1034W(B)

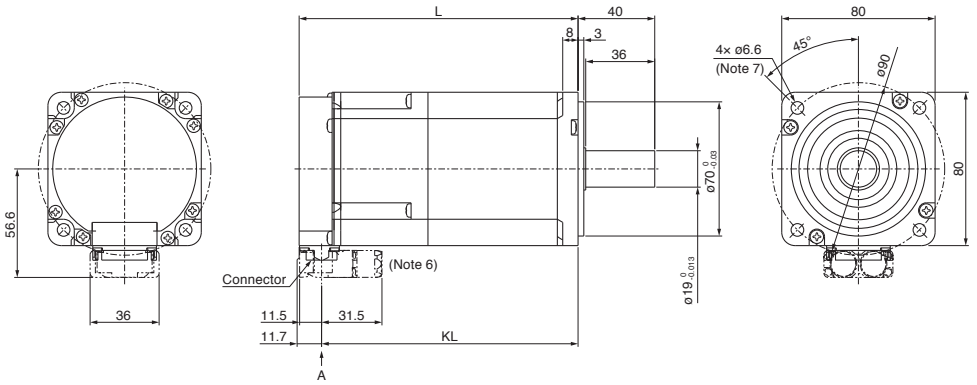

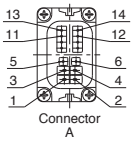

Electromagnetic brake (Note 2)

Pin No.	Signal name
5	B1
6	B2

Power supply

Pin No.	Signal name
1	E
2	U
3	W
4	V

Encoder

Pin No.	Signal name
11	P5
12	MR
13	LG
14	MRR

Model	Variable dimensions (Note 1)	
	L	KL
HK-KT7M3W(B) HK-KT7M34W(B)	92.5 (128)	80.8 (116.3)
HK-KT103W(B) HK-KT1034W(B)	101.5 (137)	89.8 (125.3)

[Unit: mm]

HK-KT63UW(B), HK-KT7M3UW(B), HK-KT103UW(B), HK-KT153W(B),
HK-KT203W(B), HK-KT202W(B),
HK-KT634UW(B), HK-KT1034UW(B), HK-KT1534W(B),
HK-KT2034W(B), HK-KT2024W(B)

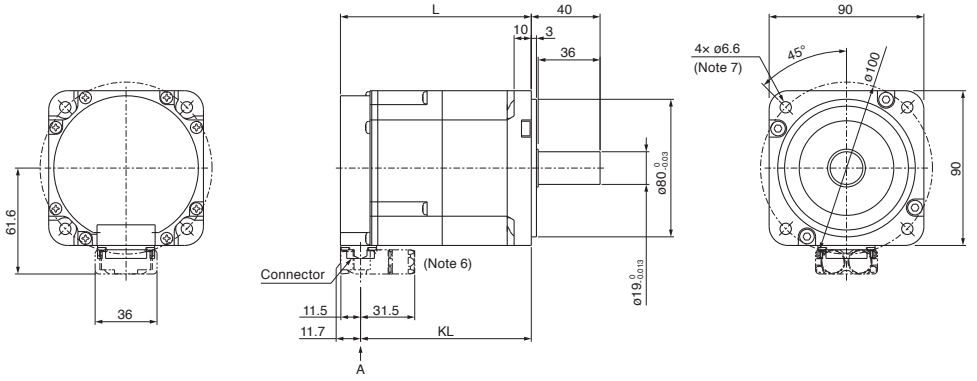

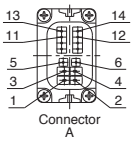

Electromagnetic brake (Note 2)

Pin No.	Signal name
5	B1
6	B2

Power supply

Pin No.	Signal name
1	E
2	U
3	W
4	V

Encoder

Pin No.	Signal name
11	P5
12	MR
13	LG
14	MRR

Model	Variable dimensions (Note 1)	
	L	KL
HK-KT63UW(B) HK-KT634UW(B) HK-KT7M3UW(B)	83.5 (111)	71.8 (99.3)
HK-KT103UW(B) HK-KT1034UW(B)	92.5 (120)	80.8 (108.3)
HK-KT153W(B) HK-KT1534W(B)	118.9 (158.3)	107.2 (146.6)
HK-KT203W(B) HK-KT2034W(B)	136.9 (176.3)	125.2 (164.6)
HK-KT202W(B) HK-KT2024W(B)	172.9 (212.3)	161.2 (200.6)

[Unit: mm]

Notes: 1. The dimensions in brackets are for the models with an electromagnetic brake.
2. The electromagnetic brake terminals do not have polarity.
3. The dimensions are the same regardless of whether or not an oil seal is installed.
4. Use a friction coupling to fasten a load.
5. The actual dimensions may be up to 3 mm larger than those shown in the drawing because of shifting and variance of parts that occur during the assembly and manufacture of the rotary servo motors. The dimensions and tolerances shown are applicable at a temperature of 20 °C and may vary depending on the ambient temperature. Design the machine to allow for sufficient space.
6. The dimensions are applicable when a dual type motor cable is led to the load side. Refer to "HK-KT Series Connector Dimensions" in this catalog for the dimensions when leading the cable to the opposite to the load side or leading vertically and when using a single type motor cable.
7. Use hexagon socket head cap screws when mounting the servo motor.

HK-KT Series Connector Dimensions

Cable direction: load side/opposite to load side

Model	Variable dimensions							
	Dual cable type				Single cable type			
	A	B	C	D	A	B	C	D
HK-KT053W HK-KT13W HK-KT1M3W	36.8	36	12.7	31.5	39.6	32	12.7	40
HK-KT13UW HK-KT23W HK-KT43(4)W HK-KT63(4)W	46.6		11.7		49.4		11.7	
HK-KT23UW HK-KT43UW HK-KT7M3(4)W HK-KT103(4)W	56.6				59.4			
HK-KT63(4)UW HK-KT7M3UW HK-KT103(4)UW HK-KT153(4)W HK-KT203(4)W HK-KT202(4)W	61.6				64.4			

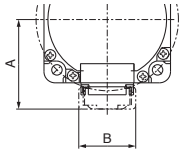

Cable direction: load side

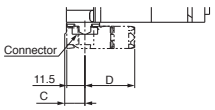

Cable direction: opposite to load side

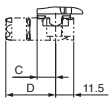

* The drawing shows a dual cable type as an example.

[Unit: mm]

Cable direction: vertical

Model	Variable dimensions					
	Dual cable type			Single cable type		
	A	B	C	A	B	C
HK-KT053W HK-KT13W HK-KT1M3W	63.4	36	12.7	71.9	32	12.7
HK-KT13UW HK-KT23W HK-KT43(4)W HK-KT63(4)W	73.2		11.7	81.7		11.7
HK-KT23UW HK-KT43UW HK-KT7M3(4)W HK-KT103(4)W	83.2			91.7		
HK-KT63(4)UW HK-KT7M3UW HK-KT103(4)UW HK-KT153(4)W HK-KT203(4)W HK-KT202(4)W	88.2			96.7		

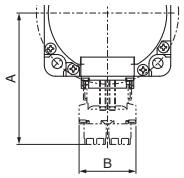

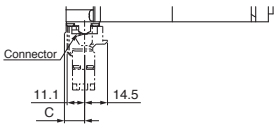

* The drawing shows a dual cable type as an example.

[Unit: mm]

HK-KT Series with Special Shaft Dimensions

Servo motors with the following specifications are also available.

D: D-cut shaft (Note 1)

Model	Variable dimensions	
	Q1	Q2
HK-KT053WD HK-KT13WD HK-KT1M3WD	21.5	20.5
HK-KT13UWD	21	20

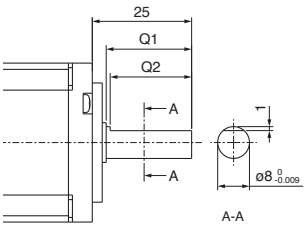

[Unit: mm]

L: L-cut shaft (Note 1)

Model	Variable dimensions	
	Q1	Q2
HK-KT053WL HK-KT13WL HK-KT1M3WL	21.5	20.5
HK-KT13UWL	21	20

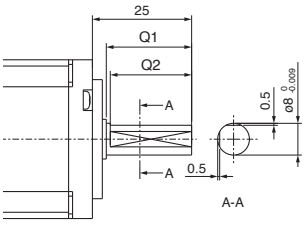

[Unit: mm]

K: Keyed shaft (with a double round-ended key) (Note 1, 3)

Model	Variable dimensions									
	S	LR	Q	W	QK	QL	U	R	T	Y
HK-KT053WK HK-KT13WK HK-KT1M3WK	8 0 -0.009	25	21.5	3	14	5	6.2 0 -0.085	1.5	3	M3×8
HK-KT13UWK			21							
HK-KT23WK HK-KT43(4)WK HK-KT63(4)WK HK-KT23UWK HK-KT43UWK	14 0 -0.011	30	26	5	20	3	11 0 -0.085	2.5	5	M4×15
HK-KT7M3(4)WK HK-KT103(4)WK HK-KT63(4)UWK HK-KT7M3UWK HK-KT103(4)UWK HK-KT153(4)WK HK-KT203(4)WK HK-KT202(4)WK	19 0 -0.013	40	36	6	25	5	15.5 0 -0.1	3	6	M5×20

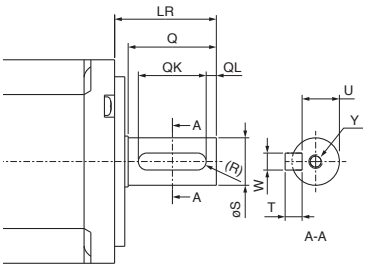

[Unit: mm]

N: Keyed shaft (without a key) (Note 1, 2)

Model	Variable dimensions								
	S	LR	Q	W	QK	QL	U	R	Y
HK-KT053WN HK-KT13WN HK-KT1M3WN	8 0 -0.009	25	21.5	3 -0.004 -0.029	14	5	6.2 0 -0.085	1.5	M3×8
HK-KT13UWN			21						
HK-KT23WN HK-KT43(4)WN HK-KT63(4)WN HK-KT23UWN HK-KT43UWN	14 0 -0.011	30	26	5 0 -0.03	20	3	11 0 -0.085	2.5	M4×15
HK-KT7M3(4)WN HK-KT103(4)WN HK-KT63(4)UWN HK-KT7M3UWN HK-KT103(4)UWN HK-KT153(4)WN HK-KT203(4)WN HK-KT202(4)WN	19 0 -0.013	40	36	6 0 -0.03	25	5	15.5 0 -0.1	3	M5×20

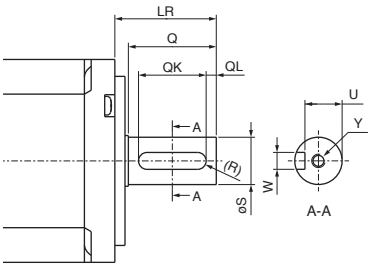

[Unit: mm]

Notes: 1. Do not use the servo motors with a D-cut shaft, an L-cut shaft, or a keyed shaft for frequent start/stop applications as this may cause the damage to the shaft.
2. The servo motor is supplied without a key. The user needs to prepare a key.
3. The key is included as an accessory and not mounted to the shaft.

HK-KT Series Geared Servo Motor Specifications

With a gear reducer for general industrial machines, flange mounting: G1

Model HK-KT	Output [kW]	Reduction ratio	Actual reduction ratio	Moment of inertia J [× 10^{-4} kg•m^2] (Note 1)		Permissible load to motor inertia ratio (Note 2) (when converted into the servo motor shaft)	Permissible load for the shaft *1			Mass [kg]		Lubrication method	Mounting direction
				Without electro-magnetic brake	With electro-magnetic brake		Q [mm]	Radial [N]	Thrust [N]	Without electro-magnetic brake	With electro-magnetic brake		
053G1	0.05	1/5 (Note 7)	9/44	0.0764	0.0804	5.8 times or less	12.5	150	200	1.4	1.6	Grease (filled)	Any direction
		1/12 (Note 7)	49/576	0.0984	0.102			240	320	1.8	2.0		
		1/20 (Note 7)	25/484	0.0804	0.0844			370	450	1.8	2.0		
13G1	0.1	1/5	9/44	0.106	0.110	5.7 times or less	12.5	150	200	1.5	1.7		
		1/12	49/576	0.128	0.132			240	320	1.9	2.1		
		1/20	25/484	0.110	0.114			370	450	1.9	2.1		
23G1	0.2	1/5	19/96	0.363	0.408	7.5 times or less	17.5	330	350	3.2	3.6		
		1/12	961/11664	0.494	0.539			710	720	3.8	4.2		
		1/20	513/9984	0.375	0.420			780	780	3.8	4.2		
43G1	0.4	1/5	19/96	0.564	0.596	7 times or less	17.5	330	350	3.5	3.9		
		1/12	961/11664	0.695	0.727			710	720	4.1	4.5		
		1/20	7/135	0.687	0.719			760	760	5.2	5.6		
7M3G1	0.75	1/5	1/5	1.79	1.93	5 times or less	25	430	430	5.4	6.1		
		1/12	7/87	1.85	1.99			620	620	6.5	7.2		
		1/20	625/12544	2.52	2.66			970	960	9.4	11		

Item	Specifications
Mounting method	Flange mounting
Output shaft rotation direction	Same as the servo motor output shaft direction
Backlash (Note 4)	60 minutes or less at gear reducer output shaft
Maximum torque (at servo motor shaft) (Note 5)	Three times of the rated torque (Refer to HK-KT series specifications in this catalog for the rated torque.)
Maximum speed (at servo motor shaft)	4500 r/min
IP rating (gear reducer part)	Equivalent to IP44
Gear reducer efficiency (Note 3, 6)	40 % to 85 %

Notes: 1. The moments of inertia in the table are the values that are converted into the shaft of the servo motor with a gear reducer (and with an electromagnetic brake).
2. Contact your local sales office if the load to motor inertia ratio exceeds the value in the table.
3. The gear reducer efficiency varies depending on the reduction ratio and the conditions of use such as an output torque, speed, and temperature. The values in the table are not guaranteed as they are representative values at the rated torque and speed at a temperature of 20 °C.
4. The backlash can be converted: 1 minute = 0.0167°
5. The torques of the geared servo motors do not increase even when these servo motors are combined with larger capacity servo amplifiers.
6. When the ambient temperature is low, the lubricant in the gear reducer may cause the load torque to be higher immediately after the operation starts. Conduct a test run on the servo motors before an actual operation to make sure that no alarm occurs.
7. If a motor cable (single cable type) is led to the load side of a servo motor without an electromagnetic brake, the cable interferes with the gear reducer.

Refer to "Annotations for Geared Servo Motor Specifications" on p. 4-86 in this catalog for details about asterisks 1.

HK-KT Series Geared Servo Motor Specifications

With a flange-output type gear reducer for high precision applications, flange mounting: G5

Model HK-KT	Output [kW]	Reduction ratio (Note 3)	Moment of inertia J [× 10^{-4} kg•m^2] (Note 1)		Permissible load to motor inertia ratio (Note 2) (when converted into the servo motor shaft)	Permissible load for the shaft *1			Mass [kg]		Lubrication method	Mounting direction
			Without electro-magnetic brake	With electro-magnetic brake		L [mm]	Radial [N]	Thrust [N]	Without electro-magnetic brake	With electro-magnetic brake		
053G5	0.05	1/5 (40 × 40)	0.0429	0.0469	11.5 times or less	17	93	431	0.48	0.66	Grease (filled)	Any direction
		1/5 (60 × 60) (Note 9)	0.107	0.111		23	177	706	1.1	1.3		
		1/9	0.0419	0.0459		17	111	514	0.49	0.67		
		1/11 (Note 9)	0.0994	0.103		23	224	895	1.2	1.4		
		1/21 (Note 9)	0.0904	0.0944		23	272	1987	1.2	1.4		
		1/33 (Note 9)	0.0844	0.0884		23	311	1244	1.2	1.4		
		1/45 (Note 9)	0.0844	0.0884		23	342	1366	1.2	1.4		
13G5	0.1	1/5 (40 × 40)	0.0721	0.0760	11.4 times or less	17	93	431	0.58	0.76		
		1/5 (60 × 60) (Note 8)	0.137	0.141		23	177	706	1.2	1.4		
		1/11 (Note 8)	0.129	0.133		23	224	895	1.3	1.5		
		1/21 (Note 8)	0.120	0.124		23	272	1087	1.3	1.5		
		1/33 (Note 8)	0.131	0.135		32	733	2581	2.5	2.7		
		1/45 (Note 8)	0.130	0.134		32	804	2833	2.5	2.7		
23G5	0.2	1/5	0.410	0.455	14.9 times or less	23	177	706	1.7	2.1		
		1/11	0.412	0.457		23	224	895	1.8	2.2		
		1/21 (Note 9)	0.707	0.752		32	640	2254	3.3	3.7		
		1/33 (Note 9)	0.661	0.706		32	733	2581	3.3	3.7		
		1/45 (Note 9)	0.660	0.705		32	804	2833	3.3	3.7		
43G5	0.4	1/5	0.611	0.643	14 times or less	23	177	706	2.1	2.5		
		1/11 (Note 8)	0.986	1.02		32	527	1856	3.7	4.1		
		1/21 (Note 8)	0.908	0.940		32	640	2254	3.7	4.1		
		1/33 (Note 8)	0.960	0.992		57	1252	4992	5.8	6.2		
		1/45 (Note 8)	0.954	0.986		57	1374	5478	5.8	6.2		
7M3G5	0.75	1/5	2.02	2.16	10 times or less	32	416	1465	4.2	4.9		
		1/11	1.93	2.07		32	527	1856	4.5	5.2		
		1/21	2.12	2.26		57	1094	4359	6.6	7.3		
		1/33	1.90	2.04		57	1252	4992	6.6	7.3		
		1/45	1.90	2.04		57	1374	5478	6.6	7.3		

Item	Specifications
Mounting method	Flange mounting
Output shaft rotation direction	Same as the servo motor output shaft direction
Backlash (Note 5)	3 minutes or less at gear reducer output shaft
Maximum torque (at servo motor shaft) (Note 6)	Three times of the rated torque (Refer to HK-KT series specifications in this catalog for the rated torque.)
Maximum speed (at servo motor shaft)	6000 r/min
IP rating (gear reducer part)	Equivalent to IP44
Gear reducer efficiency (Note 4, 7)	HK-KT053G5 1/5 (60 × 60): 12 % HK-KT053G5 1/11, 1/21, 1/33, and 1/45: 22 % to 34 % HK-KT053G5 1/5 (40 × 40) and 1/9, and HK-KT13G5 to HK-KT7M3G5: 48 % to 84 %

Notes:
1. The moments of inertia in the table are the values that are converted into the shaft of the servo motor with a gear reducer (and with an electromagnetic brake).
2. Contact your local sales office if the load to motor inertia ratio exceeds the value in the table.
3. The values in brackets represent the dimensions of the flange.
4. The gear reducer efficiency varies depending on the reduction ratio and the conditions of use such as an output torque, speed, and temperature. The values in the table are not guaranteed as they are representative values at the rated torque and speed at a temperature of 20 °C.
5. The backlash can be converted: 1 minute = 0.0167˚
6. The torques of the geared servo motors do not increase even when these servo motors are combined with larger capacity servo amplifiers.
7. When the ambient temperature is low, the lubricant in the gear reducer may cause the load torque to be higher immediately after the operation starts. Conduct a test run on the servo motors before an actual operation to make sure that no alarm occurs.
8. If a motor cable (single cable type) is led to the load side of a servo motor without an electromagnetic brake, the cable interferes with the gear reducer.
9. If a motor cable is led to the load side of a servo motor without an electromagnetic brake, the cable interferes with the gear reducer.

Refer to "Annotations for Geared Servo Motor Specifications" on p. 4-86 in this catalog for details about asterisks 1.

HK-KT Series Geared Servo Motor Specifications

With a shaft-output type gear reducer for high precision applications, flange mounting: G7

Model HK-KT	Output [kW]	Reduction ratio (Note 3)	Moment of inertia J [× 10^{-4} kg•m^2] (Note 1)		Permissible load to motor inertia ratio (Note 2) (when converted into the servo motor shaft)	Permissible load for the shaft *1			Mass [kg]		Lubrication method	Mounting direction
			Without electro-magnetic brake	With electro-magnetic brake		Q [mm]	Radial [N]	Thrust [N]	Without electro-magnetic brake	With electro-magnetic brake		
053G7	0.05	1/5 (40 × 40)	0.0456	0.0496	11.5 times or less	17	93	431	0.51	0.69	Grease (filled)	Any direction
		1/5 (60 × 60) (Note 9)	0.113	0.117		23	177	706	1.1	1.3		
		1/9	0.0436	0.0476		17	111	514	0.51	0.69		
		1/11 (Note 9)	0.100	0.104		23	224	895	1.2	1.4		
		1/21 (Note 9)	0.0904	0.0944		23	272	1987	1.2	1.4		
		1/33 (Note 9)	0.0844	0.0884		23	311	1244	1.2	1.4		
		1/45 (Note 9)	0.0844	0.0884		23	342	1366	1.2	1.4		
13G7	0.1	1/5 (40 × 40)	0.0748	0.0787	11.4 times or less	17	93	431	0.61	0.79		
		1/5 (60 × 60) (Note 8)	0.143	0.147		23	177	706	1.2	1.4		
		1/11 (Note 8)	0.130	0.134		23	224	895	1.3	1.5		
		1/21 (Note 8)	0.120	0.124		23	272	1087	1.3	1.5		
		1/33 (Note 8)	0.132	0.136		32	733	2581	2.8	3.0		
		1/45 (Note 8)	0.130	0.134		32	804	2833	2.8	3.0		
23G7	0.2	1/5	0.416	0.461	14.9 times or less	23	177	706	1.7	2.2		
		1/11	0.412	0.457		23	224	895	1.8	2.3		
		1/21 (Note 9)	0.709	0.754		32	640	2254	3.7	4.1		
		1/33 (Note 9)	0.662	0.707		32	733	2581	3.7	4.1		
		1/45 (Note 9)	0.660	0.705		32	804	2833	3.7	4.1		
43G7	0.4	1/5	0.617	0.649	14 times or less	23	177	706	2.2	2.6		
		1/11 (Note 8)	0.994	1.03		32	527	1856	4.1	4.5		
		1/21 (Note 8)	0.910	0.942		32	640	2254	4.1	4.5		
		1/33 (Note 8)	0.966	0.998		57	1252	4992	7.2	7.6		
		1/45 (Note 8)	0.957	0.989		57	1374	5478	7.2	7.6		
7M3G7	0.75	1/5	2.06	2.20	10 times or less	32	416	1465	4.6	5.3		
		1/11	1.94	2.08		32	527	1856	4.9	5.6		
		1/21	2.14	2.28		57	1094	4359	8.0	8.7		
		1/33	1.91	2.05		57	1252	4992	8.0	8.7		
		1/45	1.90	2.04		57	1374	5478	8.0	8.7		

Item	Specifications
Mounting method	Flange mounting
Output shaft rotation direction	Same as the servo motor output shaft direction
Backlash (Note 5)	3 minutes or less at gear reducer output shaft
Maximum torque (at servo motor shaft) (Note 6)	Three times of the rated torque (Refer to HK-KT series specifications in this catalog for the rated torque.)
Maximum speed (at servo motor shaft)	6000 r/min
IP rating (gear reducer part)	Equivalent to IP44
Gear reducer efficiency (Note 4, 7)	HK-KT053G7 1/5 (60 × 60): 12 % HK-KT053G7 1/11, 1/21, 1/33, and 1/45: 22 % to 34 % HK-KT053G7 1/5 (40 × 40) and 1/9, and HK-KT13G7 to HK-KT7M3G7: 48 % to 84 %

Notes:
1. The moments of inertia in the table are the values that are converted into the shaft of the servo motor with a gear reducer (and with an electromagnetic brake).
2. Contact your local sales office if the load to motor inertia ratio exceeds the value in the table.
3. The values in brackets represent the dimensions of the flange.
4. The gear reducer efficiency varies depending on the reduction ratio and the conditions of use such as an output torque, speed, and temperature. The values in the table are not guaranteed as they are representative values at the rated torque and speed at a temperature of 20 °C.
5. The backlash can be converted: 1 minute = 0.0167°
6. The torques of the geared servo motors do not increase even when these servo motors are combined with larger capacity servo amplifiers.
7. When the ambient temperature is low, the lubricant in the gear reducer may cause the load torque to be higher immediately after the operation starts. Conduct a test run on the servo motors before an actual operation to make sure that no alarm occurs.
8. If a motor cable (single cable type) is led to the load side of a servo motor without an electromagnetic brake, the cable interferes with the gear reducer.
9. If a motor cable is led to the load side of a servo motor without an electromagnetic brake, the cable interferes with the gear reducer.

Refer to "Annotations for Geared Servo Motor Specifications" on p. 4-86 in this catalog for details about asterisks 1.

HK-KT Series Geared Servo Motor Dimensions (Note 1, 5)

With a gear reducer for general industrial machines, flange mounting

HK-KT_G1 (Note 6)

The drawing is schematic only. The actual shapes of the servo motors and the location of the mounting screws may differ from the drawing.

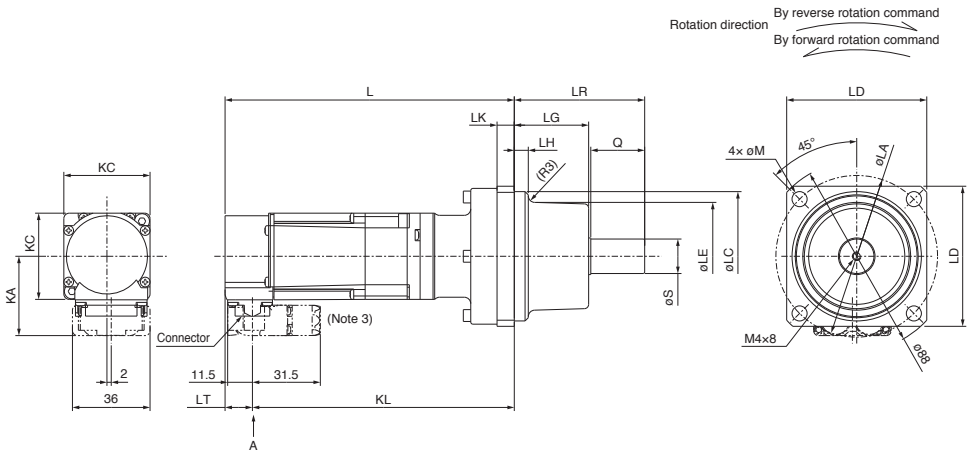

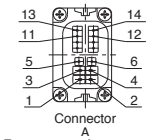

Electromagnetic brake (Note 2)

Pin No.	Signal name
5	B1
6	B2

Power supply

Pin No.	Signal name
1	E
2	U
3	W
4	V

Encoder

Pin No.	Signal name
11	P5
12	MR
13	LG
14	MRR

[Unit: mm]

Model HK-KT	Reduction ratio (Actual reduction ratio)	Variable dimensions (Note 4) L	LA	LC	LD	LE	S	LH	LK	KL	LG	Q	LR	M	KA	LT	KC
053(B)G1	1/5 (9/44)	99.2 (134.2)	75	$60^{0}_{-0.03}$	65	50	$16^{0}_{-0.011}$	6.5	8	86.5 (121.5)	34.5	25	60.5	7	36.8	12.7	40
	1/12 (49/576)	118 (153)								105.3 (140.3)							
	1/20 (25/484)																
13(B)G1	1/5 (9/44)	111.7 (146.7)								99 (134)							
	1/12 (49/576)	130.5 (165.5)								117.8 (152.8)							
	1/20 (25/484)																
23(B)G1	1/5 (19/96)	120.7 (155.3)	100	$82^{0}_{-0.035}$	90	75	$25^{0}_{-0.013}$	8	10	109 (143.6)	38	35	74	9	46.6	11.7	60
	1/12 (961/11664)	140.5 (175.1)								128.8 (163.4)							
	1/20 (513/9984)																
43(B)G1	1/5 (19/96)	138.7 (173.3)								127 (161.6)							
	1/12 (961/11664)	158.5 (193.1)								146.8 (181.4)							
	1/20 (7/135)	162.5 (197.1)	115	$95^{0}_{-0.035}$	100	83	$32^{0}_{-0.016}$	9.5		150.8 (185.4)	39	50	90		56.6		80
7M3(B)G1	1/5 (1/5)	157.5 (193)								145.8 (181.3)							
	1/12 (7/87)	179.5 (215)								167.8 (203.3)							
	1/20 (625/12544)	192.5 (228)	140	$115^{0}_{-0.035}$	120	98	$40^{0}_{-0.016}$	11.5	15	180.8 (216.3)	44.5	60	105.5	14			

Notes:
1. The actual dimensions may be up to 3 mm larger than those shown in the drawing because of shifting and variance of parts that occur during the assembly and manufacture of the rotary servo motors. The dimensions and tolerances shown are applicable at a temperature of 20 °C and may vary depending on the ambient temperature. Design the machine to allow for sufficient space.
2. The electromagnetic brake terminals do not have polarity.
3. The dimensions are applicable when a dual type motor cable is led to the load side. Refer to "HK-KT Series Connector Dimensions" in this catalog for the dimensions when leading the cable to the opposite to the load side or leading vertically and when using a single type motor cable.
4. The dimensions in brackets are for the models with an electromagnetic brake.
5. Use a friction coupling to fasten a load.
6. HK-KT_G1K, a geared servo motor with a keyed shaft (with a key), is also available. Refer to "HK-KT Series Geared Servo Motor Special Shaft Dimensions" in this catalog for details.

HK-KT Series Geared Servo Motor Dimensions (Note 1)

With a flange-output type gear reducer for high precision applications, flange mounting

HK-KT_G5

The drawing is schematic only. The actual shapes of the servo motors and the location of the mounting screws may differ from the drawing.

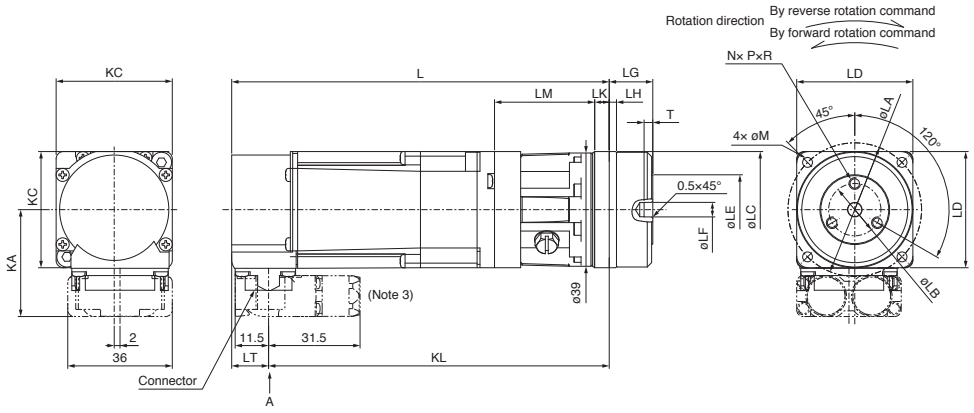

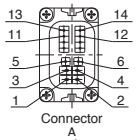

Electromagnetic brake (Note 2)

Pin No.	Signal name
5	B1
6	B2

Power supply

Pin No.	Signal name
1	E
2	U
3	W
4	V

Encoder

Pin No.	Signal name
11	P5
12	MR
13	LG
14	MRR

[Unit: mm]

Model HK-KT	Reduction ratio (Note 5)	Variable dimensions (Note 4) L	LA	LB	LC	LD	LE	LF	LG	LH	LK	LM	KL	T	N	P	R	M	KA	LT	KC
053(B)G5	1/5 (40 × 40)	95 (130)	46	18	$40^{0}_{-0.025}$	40	24	$5^{+0.012}_{0}$	$15^{+0.25}_{+0.20}$	2.5	5	34.5	82.3 (117.3)	3	3	M4	6	3.4	36.8	12.7	40
	1/5 (60 × 60)	119.5 (154.5)	70	30	$56^{0}_{-0.03}$	60	40	$14^{+0.018}_{0}$	$21^{+0.4}_{+0.5}$	3	8	56	106.8 (141.8)	5	6		7	5.5			
	1/9	95 (130)	46	18	$40^{0}_{-0.025}$	40	24	$5^{+0.012}_{0}$	$15^{+0.25}_{+0.20}$	2.5	5	34.5	82.3 (117.3)	3	3		6	3.4			
	1/11	119.5 (154.5)	70	30	$56^{0}_{-0.03}$	60	40	$14^{+0.018}_{0}$	$21^{+0.4}_{+0.5}$	3	8	56	106.8 (141.8)	5	6		7	5.5			
	1/21																				
	1/33																				
	1/45																				
13(B)G5	1/5 (40 × 40)	107.5 (142.5)	46	18	$40^{0}_{-0.025}$	40	24	$5^{+0.012}_{0}$	$15^{+0.25}_{+0.20}$	2.5	5	34.5	94.8 (129.8)	3	3		6	3.4			
	1/5 (60 × 60)	132 (167)	70	30	$56^{0}_{-0.03}$	60	40	$14^{+0.018}_{0}$	$21^{+0.4}_{+0.5}$	3	8	56	119.3 (154.3)	5	6		7	5.5			
	1/11																				
	1/21																				
	1/33	134.5 (169.5)	105	45	$85^{0}_{-0.035}$	90	59	$24^{+0.021}_{0}$	$27^{+0.4}_{+0.5}$	8	10	56.5	121.8 (156.8)			M6	10	9			
	1/45																				
23(B)G5	1/5	131.5 (166.1)	70	30	$56^{0}_{-0.03}$	60	40	$14^{+0.018}_{0}$	$21^{+0.4}_{+0.5}$	3	8	56	119.8 (154.4)			M4	7	5.5	46.6	11.7	60
	1/11																				
	1/21	138.5 (173.1)	105	45	$85^{0}_{-0.035}$	90	59	$24^{+0.021}_{0}$	$27^{+0.4}_{+0.5}$	8	10	61	126.8 (161.4)			M6	10	9			
	1/33																				
	1/45																				
43(B)G5	1/5	149.5 (184.1)	70	30	$56^{0}_{-0.03}$	60	40	$14^{+0.018}_{0}$	$21^{+0.4}_{+0.5}$	3	8	56	137.8 (172.4)	5	6	M4	7	5.5			
	1/11	156.5 (191.1)	105	45	$85^{0}_{-0.035}$	90	59	$24^{+0.021}_{0}$	$27^{+0.4}_{+0.5}$	8	10	61	144.8 (179.4)			M6	10	9			
	1/21																				
	1/33	168.5 (203.1)	135	60	$115^{0}_{-0.035}$	120	84	$32^{+0.025}_{0}$	$35^{+0.4}_{+0.5}$	13	13	70	156.8 (191.4)			M8	12	11			
	1/45																				
7M3(B)G5	1/5	170.5 (206)	105	45	$85^{0}_{-0.035}$	90	59	$24^{+0.021}_{0}$	$27^{+0.4}_{+0.5}$	8	10	68	158.8 (194.3)			M6	10	9	56.6		80
	1/11																				
	1/21	180.5 (216)	135	60	$115^{0}_{-0.035}$	120	84	$32^{+0.025}_{0}$	$35^{+0.4}_{+0.5}$	13	13	75	168.8 (204.3)			M8	12	11			
	1/33																				
	1/45																				

Notes:
1. The actual dimensions may be up to 3 mm larger than those shown in the drawing because of shifting and variance of parts that occur during the assembly and manufacture of the rotary servo motors. The dimensions and tolerances shown are applicable at a temperature of 20 °C and may vary depending on the ambient temperature. Design the machine to allow for sufficient space.
2. The electromagnetic brake terminals do not have polarity.
3. The dimensions are applicable when a dual type motor cable is led to the load side. Refer to "HK-KT Series Connector Dimensions" in this catalog for the dimensions when leading the cable to the opposite to the load side or leading vertically and when using a single type motor cable.
4. The dimensions in brackets are for the models with an electromagnetic brake.
5. The values in brackets represent the dimensions of the flange.

HK-KT Series Geared Servo Motor Dimensions (Note 1, 5)

With a shaft-output type gear reducer for high precision applications, flange mounting

HK-KT_G7 (Note 7)

The drawing is schematic only. The actual shapes of the servo motors and the location of the mounting screws may differ from the drawing.

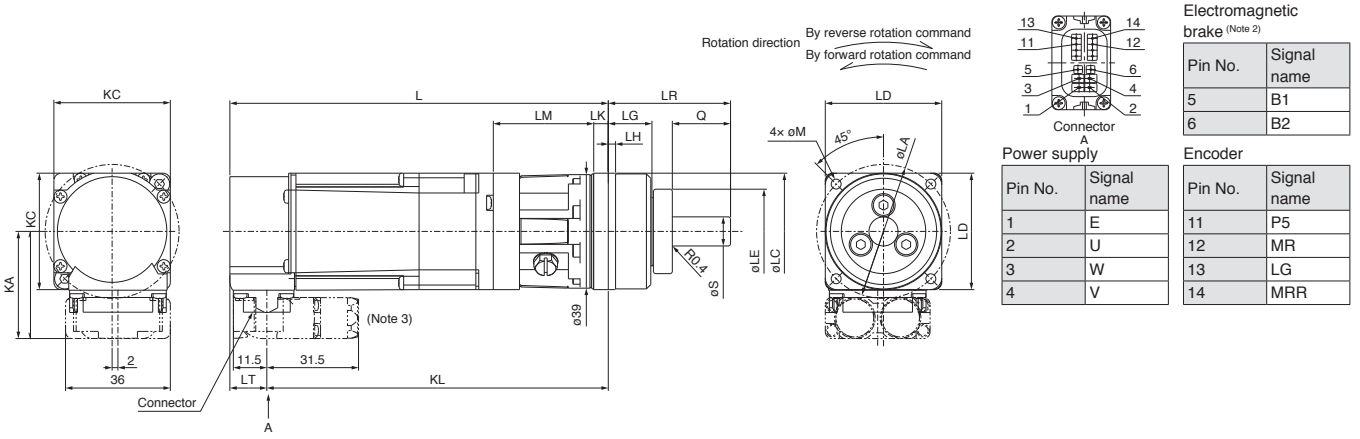

Electromagnetic brake (Note 2)

Pin No.	Signal name
5	B1
6	B2

Power supply

Pin No.	Signal name
1	E
2	U
3	W
4	V

Encoder

Pin No.	Signal name
11	P5
12	MR
13	LG
14	MRR

[Unit: mm]

Model HK-KT	Reduction ratio (Note 6)	Variable dimensions (Note 4) L	LA	LC	LD	LE	S	LG	LH	Q	LR	LK	LM	KL	M	KA	LT	KC
053(B)G7	1/5 (40 × 40)	95 (130)	46	40 $^{0}_{-0.025}$	40	29	10 $^{0}_{-0.015}$	15	2.5	20	42	5	34.5	82.3 (117.3)	3.4	36.8	12.7	40
	1/5 (60 × 60)	119.5 (154.5)	70	56 $^{0}_{-0.03}$	60	40	16 $^{0}_{-0.018}$	21	3	28	58	8	56	106.8 (141.8)	5.5			
	1/9	95 (130)	46	40 $^{0}_{-0.025}$	40	29	10 $^{0}_{-0.015}$	15	2.5	20	42	5	34.5	82.3 (117.3)	3.4			
	1/11	119.5 (154.5)	70	56 $^{0}_{-0.03}$	60	40	16 $^{0}_{-0.018}$	21	3	28	58	8	56	106.8 (141.8)	5.5			
	1/21																	
	1/33																	
	1/45																	
13(B)G7	1/5 (40 × 40)	107.5 (142.5)	46	40 $^{0}_{-0.025}$	40	29	10 $^{0}_{-0.015}$	15	2.5	20	42	5	34.5	94.8 (129.8)	3.4			
	1/5 (60 × 60)	132 (167)	70	56 $^{0}_{-0.03}$	60	40	16 $^{0}_{-0.018}$	21	3	28	58	8	56	119.3 (154.3)	5.5			
	1/11																	
	1/21																	
	1/33	134.5 (169.5)	105	85 $^{0}_{-0.035}$	90	59	25 $^{0}_{-0.021}$	27	8	42	80	10	56.5	121.8 (156.8)	9			
	1/45																	
23(B)G7	1/5	131.5 (166.1)	70	56 $^{0}_{-0.03}$	60	40	16 $^{0}_{-0.018}$	21	3	28	58	8	56	119.8 (154.4)	5.5	46.6	11.7	60
	1/11																	
	1/21	138.5 (173.1)	105	85 $^{0}_{-0.035}$	90	59	25 $^{0}_{-0.021}$	27	8	42	80	10	61	126.8 (161.4)	9			
	1/33																	
	1/45																	
43(B)G7	1/5	149.5 (184.1)	70	56 $^{0}_{-0.03}$	60	40	16 $^{0}_{-0.018}$	21	3	28	58	8	56	137.8 (172.4)	5.5			
	1/11	156.5 (191.1)	105	85 $^{0}_{-0.035}$	90	59	25 $^{0}_{-0.021}$	27	8	42	80	10	61	144.8 (179.4)	9			
	1/21																	
	1/33	168.5 (203.1)	135	115 $^{0}_{-0.035}$	120	84	40 $^{0}_{-0.025}$	35	13	82	133	13	70	156.8 (191.4)	11			
	1/45																	
7M3(B)G7	1/5	170.5 (206)	105	85 $^{0}_{-0.035}$	90	59	25 $^{0}_{-0.021}$	27	8	42	80	10	68	158.8 (194.3)	9	56.6		80
	1/11																	
	1/21	180.5 (216)	135	115 $^{0}_{-0.035}$	120	84	40 $^{0}_{-0.025}$	35	13	82	133	13	75	168.8 (204.3)	11			
	1/33																	
	1/45																	

Notes:
1. The actual dimensions may be up to 3 mm larger than those shown in the drawing because of shifting and variance of parts that occur during the assembly and manufacture of the rotary servo motors. The dimensions and tolerances shown are applicable at a temperature of 20 °C and may vary depending on the ambient temperature. Design the machine to allow for sufficient space.
2. The electromagnetic brake terminals do not have polarity.
3. The dimensions are applicable when a dual type motor cable is led to the load side. Refer to "HK-KT Series Connector Dimensions" in this catalog for the dimensions when leading the cable to the opposite to the load side or leading vertically and when using a single type motor cable.
4. The dimensions in brackets are for the models with an electromagnetic brake.
5. Use a friction coupling to fasten a load.
6. The values in brackets represent the dimensions of the flange.
7. HK-KT_G7K, a geared servo motor with a keyed shaft (with a key), is also available. Refer to "HK-KT Series Geared Servo Motor Special Shaft Dimensions" in this catalog for details.

HK-KT Series Geared Servo Motor Special Shaft Dimensions

The standard HK-KT_G1 (with a gear reducer for general industrial machines) and HK-KT_G7 (with a shaft-output type gear reducer for high precision applications, flange mounting) have a straight shaft. Note that these motors are also available with a keyed shaft (with a key) as HK-KT_G1K and HK-KT_G7K.

HK-KT_G1K (Note 1, 2, 4)

Keyed shaft (with a double square-ended key)

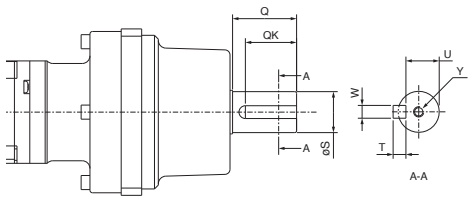

[Unit: mm]

Model	Reduction ratio (Actual reduction ratio)	Variable dimensions						
		S	Q	W	QK	U	T	Y
HK-KT053(B)G1K	1/5 (9/44)	$16^{0}_{-0.011}$	25	5	20	13	5	M4×8
	1/12 (49/576)							
	1/20 (25/484)							
HK-KT13(B)G1K	1/5 (9/44)							
	1/12 (49/576)							
	1/20 (25/484)							
HK-KT23(B)G1K	1/5 (19/96)	$25^{0}_{-0.013}$	35	8	30	21	7	M6×12
	1/12 (961/11664)							
	1/20 (513/9984)							
HK-KT43(B)G1K	1/5 (19/96)							
	1/12 (961/11664)							
	1/20 (7/135)	$32^{0}_{-0.016}$	50	10	40	27	8	M8×16
HK-KT7M3(B)G1K	1/5 (1/5)							
	1/12 (7/87)							
	1/20 (625/12544)	$40^{0}_{-0.016}$	60	12	50	35		M10×20

HK-KT_G7K (Note 1, 2, 4)

Keyed shaft (with a single pointed key)

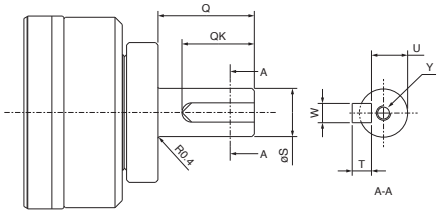

[Unit: mm]

Model	Reduction ratio (Note 3)	Variable dimensions						
		S	Q	W	QK	U	T	Y
HK-KT053(B)G7K	1/5 (40 × 40)	10	20	4	15	7.5	4	M3×6
	1/5 (60 × 60)	16	28	5	25	13	5	M4×8
	1/9	10	20	4	15	7.5	4	M3×6
	1/11	16	28	5	25	13	5	M4×8
	1/21							
	1/33							
	1/45							
HK-KT13(B)G7K	1/5 (40 × 40)	10	20	4	15	7.5	4	M3×6
	1/5 (60 × 60)	16	28	5	25	13	5	M4×8
	1/11							
	1/21							
	1/33	25	42	8	36	21	7	M6×12
	1/45							
HK-KT23(B)G7K	1/5	16	28	5	25	13	5	M4×8
	1/11							
	1/21	25	42	8	36	21	7	M6×12
	1/33							
	1/45							
HK-KT43(B)G7K	1/5	16	28	5	25	13	5	M4×8
	1/11	25	42	8	36	21	7	M6×12
	1/21							
	1/33	40	82	12	70	35	8	M10×20
	1/45							
HK-KT7M3(B)G7K	1/5	25	42	8	36	21	7	M6×12
	1/11							
	1/21	40	82	12	70	35	8	M10×20
	1/33							
	1/45							

Notes: 1. Do not use the servo motors with a keyed shaft for frequent start/stop applications as this may cause the damage to the shaft.
2. Dimensions not shown in the tables are respectively the same as those of HK-KT_G1 and HK-KT_G7 with a straight shaft. Refer to "HK-KT_G1" and "HK-KT_G7" of "HK-KT Series Geared Servo Motor Dimensions" in this catalog.
3. The values in brackets represent the dimensions of the flange.
4. The key is included as an accessory and not mounted to the shaft.

HK-MT_W (Ultra-Low Inertia, Small Capacity)

Specifications when connected with a 200 V servo amplifier

Flange size		[mm]	40 × 40			60 × 60			80 × 80	
Rotary servo motor model		HK-MT	053W	13W	1M3W	23W	43W	63W	7M3W	103W
Continuous running duty (Note 4)	Rated output	[kW]	0.05	0.1	0.15	0.2	0.4	0.6	0.75	1.0
	Rated torque (Note 5)	[N•m]	0.16 (Note 6)	0.32	0.48	0.64	1.3	1.9	2.4	3.2
Maximum torque (Note 3)		[N•m]	0.48 (0.64)	0.95 (1.3)	1.4 (1.9)	1.9 (2.3)	3.8 (4.5)	5.7 (7.1)	7.2 (8.8)	9.5 (12.4)
Rated speed (Note 4)		[r/min]	3000							
Maximum speed (Note 4)		[r/min]	6700							
Power rate at continuous rated torque [kW/s]	Without electromagnetic brake		12.5	31.7	52.2	41.5	101	156	105	143
	With electromagnetic brake		10.4	28.1	47.8	31.2	84.4	137	83.4	119
Rated current		[A]	1.2	1.2	1.2	1.6	2.5	5.3	5.8	5.4
Maximum current (Note 3)		[A]	4.3 (6.3)	4.6 (5.9)	4.6 (6.5)	6.3 (9.8)	9.7 (13)	21 (28)	21 (31)	20 (31)
Moment of inertia J [× 10^{-4} kg•m^2]	Without electromagnetic brake		0.0203	0.0320	0.0437	0.0976	0.160	0.234	0.545	0.711
	With electromagnetic brake		0.0243	0.0360	0.0477	0.130	0.192	0.266	0.683	0.849
Recommended load to motor inertia ratio (Note 1)			35 times or less (Note 8)		35 times or less					
Speed/position detector			Batteryless absolute/incremental 26-bit encoder (resolution: 67,108,864 pulses/rev)							
Type			Permanent magnet synchronous motor							
Oil seal			None (Servo motors with an oil seal are available.) (Note 6)							
Electromagnetic brake			None (Servo motors with an electromagnetic brake are available.)							
Thermistor			None							
Insulation class			155 (F)							
Structure			Totally enclosed, natural cooling (IP rating: IP67) (Note 2, 7)							
Vibration resistance *1		[m/s^2]	X: 49, Y: 49							
Vibration rank			V10 *3							
Permissible load for the shaft *2	L	[mm]	25			30			40	
	Radial	[N]	88			245			392	
	Thrust	[N]	59			98			147	
Mass [kg]	Without electromagnetic brake		0.31	0.43	0.54	0.92	1.4	1.8	2.8	3.3
	With electromagnetic brake		0.59	0.74	0.82	1.4	1.8	2.2	3.5	3.9

Notes: 1. Contact your local sales office if the load to motor inertia ratio exceeds the value in the table.
2. The shaft-through portion is excluded. Refer to the asterisk 4 of "Annotations for Rotary Servo Motor Specifications" on p. 4-86 in this catalog for the shaft-through portion.
3. The values in brackets are applicable when the torque is increased by combining a larger-capacity servo amplifier. Refer to "Combinations of Rotary Servo Motors and Servo Amplifiers" in this catalog for the available combinations.
4. The continuous running duty and the speed are not guaranteed when the power supply voltage is dropped.
5. When unbalanced torque is generated, such as in a vertical lift machine, keep the unbalanced torque of the machine under 70 % of the servo motor rated torque.
6. For HK-MT053W_J_ (with an oil seal), use the servo motor at a derating rate of 80 %.
7. When IP67 cables are required, please contact Mitsubishi Electric System & Service Co., Ltd. OVERSEAS SERVICE SECTION. (Email: osb.webmaster@melsc.jp)
8. When the servo motor is combined with a 0.1 kW servo amplifier, this recommended load to motor inertia ratio is applicable for operating the servo motor at the rated speed. If operating speed exceeds the rated speed, check whether a regenerative option is required using drive sizing software Motorizer. A servo amplifier with a larger capacity can be combined.

Refer to "Annotations for Rotary Servo Motor Specifications" on p. 4-86 in this catalog for details about asterisks 1 to 3.

Electromagnetic brake specifications (Note 1)

Model		HK-MT	053WB	13WB	1M3WB	23WB	43WB	63WB	7M3WB	103WB
Type (Note 3)			Spring actuated type safety brake							
Rated voltage (Note 4)			24 V DC (-10 % to 0 %)							
Power consumption		[W] at 20 °C	6.4			7.9			10	
Electromagnetic brake static friction torque (Note 5)		[N•m]	0.48 or higher			1.9 or higher			3.2 or higher	
Permissible braking work	Per braking	[J]	5.6			22			64	
	Per hour	[J]	56			220			640	
Electromagnetic brake life (Note 2)	Number of braking times		20000							
	Work per braking	[J]	5.6			22			64	

Notes: 1. The electromagnetic brake is for holding. It cannot be used for deceleration applications.
2. Brake lining wear due to braking will increase the brake gap, but the gap is not adjustable. Therefore, the brake life indicates the number of times the brake can be applied before gap adjustment becomes necessary.
3. This type does not have a manual release mechanism. Use a 24 V DC power supply to release the brake electrically.
4. Prepare a power supply exclusively for the electromagnetic brake.
5. The value of the brake static friction torque is the lower limit in the initial state at 20 °C.

HK-MT_VW (Ultra-Low Inertia, Small Capacity)

Specifications when connected with a 200 V servo amplifier

Flange size		[mm]	40 × 40			60 × 60			80 × 80	
Rotary servo motor model		HK-MT	053VW	13VW	1M3VW	23VW	43VW	63VW	7M3VW	103VW
Continuous running duty (Note 4)	Rated output	[kW]	0.05	0.1	0.15	0.2	0.4	0.6	0.75	1.0
	Rated torque (Note 5)	[N•m]	0.16 (Note 6)	0.32	0.48	0.64	1.3	1.9	2.4	3.2
Maximum torque (Note 3)		[N•m]	0.48 (0.64)	0.95 (1.3)	1.4 (1.9)	1.9 (2.3)	3.8 (4.5)	5.7 (7.1)	7.2 (8.8)	9.5 (11.5)
Rated speed (Note 4)		[r/min]	3000							
Maximum speed (Note 4)		[r/min]	10000							
Power rate at continuous rated torque [kW/s]	Without electromagnetic brake		12.5	31.7	52.2	41.5	101	156	105	143
	With electromagnetic brake		10.4	28.1	47.8	31.2	84.4	137	83.4	119
Rated current		[A]	1.2	1.2	1.2	1.6	3.0	5.3	5.8	8.1
Maximum current (Note 3)		[A]	4.3 (6.3)	4.6 (5.9)	4.6 (6.5)	6.3 (9.8)	12 (15)	21 (28)	21 (31)	30 (37)
Moment of inertia J [× 10^{-4} kg•m^2]	Without electromagnetic brake		0.0203	0.0320	0.0437	0.0976	0.160	0.234	0.545	0.711
	With electromagnetic brake		0.0243	0.0360	0.0477	0.130	0.192	0.266	0.683	0.849
Recommended load to motor inertia ratio (Note 1)			24 times or less (Note 8)		24 times or less			30 times or less		
Speed/position detector			Incremental 26-bit encoder (resolution: 67,108,864 pulses/rev)							
Type			Permanent magnet synchronous motor							
Oil seal			None (Servo motors with an oil seal are available.) (Note 6)							
Electromagnetic brake			None (Servo motors with an electromagnetic brake are available.)							
Thermistor			None							
Insulation class			155 (F)							
Structure			Totally enclosed, natural cooling (IP rating: IP67) (Note 2, 7)							
Vibration resistance *1		[m/s^2]	X: 49, Y: 49							
Vibration rank			V10 *3							
Permissible load for the shaft *2	L	[mm]	25			30			40	
	Radial	[N]	88			245			392	
	Thrust	[N]	59			98			147	
Mass [kg]	Without electromagnetic brake		0.31	0.43	0.54	0.92	1.4	1.8	2.8	3.3
	With electromagnetic brake		0.59	0.74	0.82	1.4	1.8	2.2	3.5	3.9

Notes:
1. Contact your local sales office if the load to motor inertia ratio exceeds the value in the table.
2. The shaft-through portion is excluded. Refer to the asterisk 4 of "Annotations for Rotary Servo Motor Specifications" on p. 4-86 in this catalog for the shaft-through portion.
3. The values in brackets are applicable when the torque is increased by combining a larger-capacity servo amplifier. Refer to "Combinations of Rotary Servo Motors and Servo Amplifiers" in this catalog for the available combinations.
4. The continuous running duty and the speed are not guaranteed when the power supply voltage is dropped.
5. When unbalanced torque is generated, such as in a vertical lift machine, keep the unbalanced torque of the machine under 70 % of the servo motor rated torque.
6. For HK-MT053VW_J_ (with an oil seal), use the servo motor at a derating rate of 80 %.
7. When IP67 cables are required, please contact Mitsubishi Electric System & Service Co., Ltd. OVERSEAS SERVICE SECTION. (Email: osb.webmaster@melsc.jp)
8. When the servo motor is combined with a 0.1 kW servo amplifier, this recommended load to motor inertia ratio is applicable for operating the servo motor at the rated speed. If operating speed exceeds the rated speed, check whether a regenerative option is required using drive sizing software Motorizer. A servo amplifier with a larger capacity can be combined.

Refer to "Annotations for Rotary Servo Motor Specifications" on p. 4-86 in this catalog for details about asterisks 1 to 3.

Electromagnetic brake specifications (Note 1)

Model		HK-MT	053VWB	13VWB	1M3VWB	23VWB	43VWB	63VWB	7M3VWB	103VWB
Type (Note 3)			Spring actuated type safety brake							
Rated voltage (Note 4)			24 V DC (-10 % to 0 %)							
Power consumption		[W] at 20 °C	6.4			7.9			10	
Electromagnetic brake static friction torque (Note 5)		[N•m]	0.48 or higher			1.9 or higher			3.2 or higher	
Permissible braking work	Per braking	[J]	5.6			22			64	
	Per hour	[J]	56			220			640	
Electromagnetic brake life (Note 2)	Number of braking times		20000							
	Work per braking	[J]	5.6			22			64	

Notes:
1. The electromagnetic brake is for holding. It cannot be used for deceleration applications.
2. Brake lining wear due to braking will increase the brake gap, but the gap is not adjustable. Therefore, the brake life indicates the number of times the brake can be applied before gap adjustment becomes necessary.
3. This type does not have a manual release mechanism. Use a 24 V DC power supply to release the brake electrically.
4. Prepare a power supply exclusively for the electromagnetic brake.
5. The value of the brake static friction torque is the lower limit in the initial state at 20 °C.

HK-MT_W Torque Characteristics (Note 1)

Specifications when connected with a 200 V servo amplifier

: For 3-phase 200 V AC
: For 1-phase 200 V AC

HK-MT053W
Standard torque

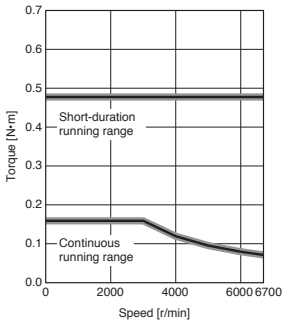

HK-MT053W
Torque increased

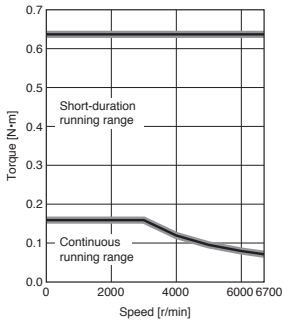

HK-MT13W
Standard torque

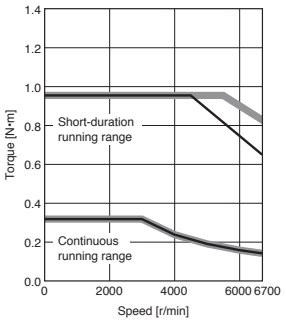

HK-MT13W
Torque increased

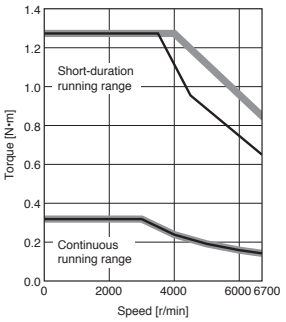

HK-MT1M3W
Standard torque

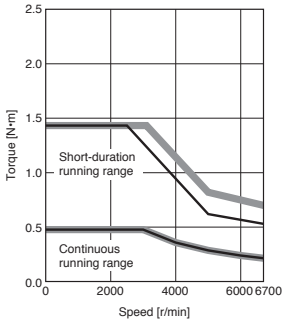

HK-MT1M3W
Torque increased

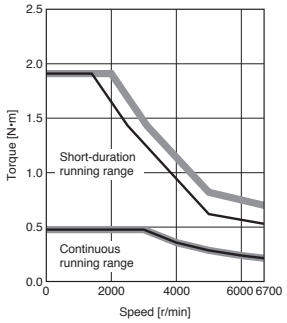

HK-MT23W
Standard torque

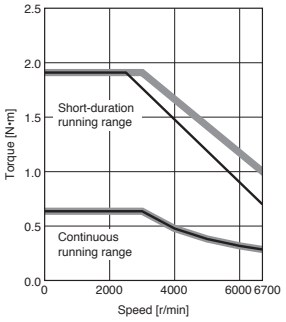

HK-MT23W
Torque increased

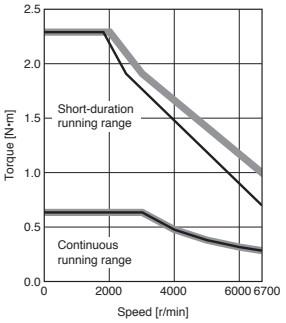

HK-MT43W
Standard torque

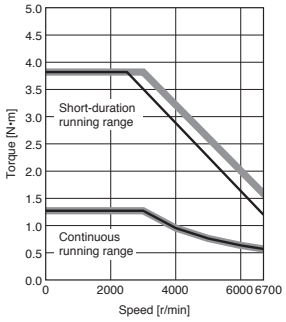

HK-MT43W
Torque increased

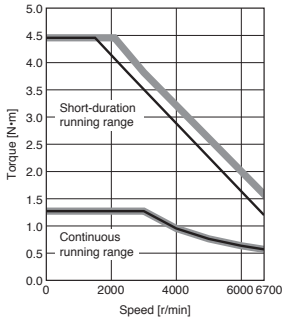

HK-MT63W
Standard torque

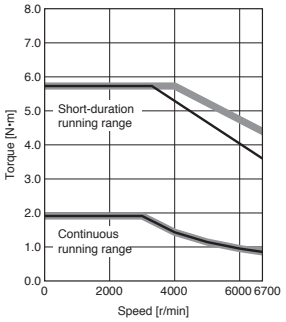

HK-MT63W
Torque increased

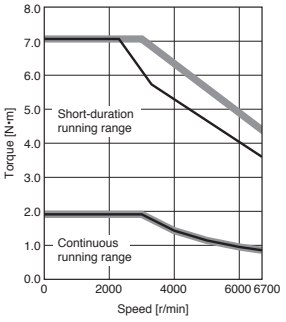

HK-MT7M3W
Standard torque

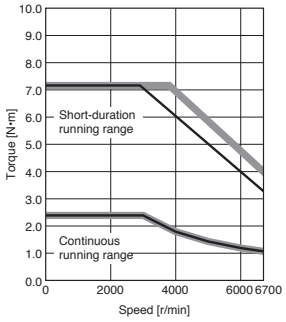

HK-MT7M3W
Torque increased

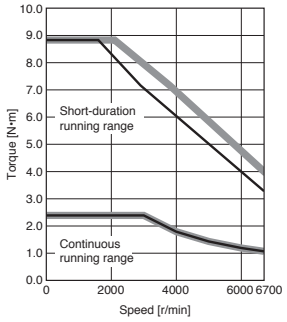

HK-MT103W (Note 2)
Standard torque

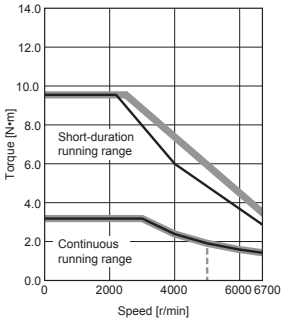

HK-MT103W (Note 2)
Torque increased

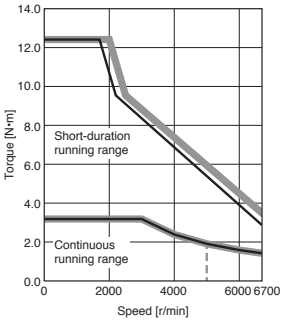

Notes: 1. Torque drops when the power supply voltage is below the specified value. - - - - : A rough indication of the possible continuous running range for 3-phase 170 V AC
2. When using a combination of the servo motors of over 750 W and MR-J5-100_ or MR-J5-200_ with a 1-phase power supply, use the servo amplifiers at 75 % or less of the effective load ratio.

HK-MT_VW Torque Characteristics (Note 1)

Specifications when connected with a 200 V servo amplifier

: For 3-phase 200 V AC
: For 1-phase 200 V AC

HK-MT053VW
Standard torque

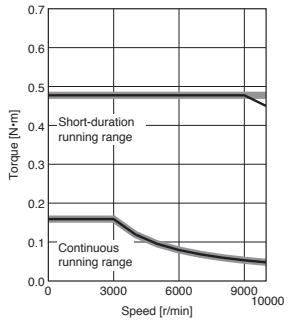

HK-MT053VW
Torque increased

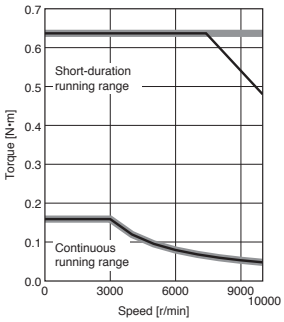

HK-MT13VW
Standard torque

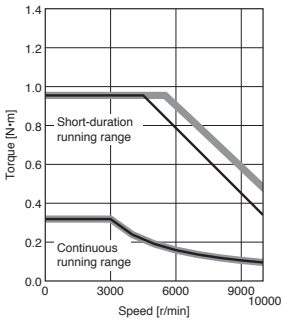

HK-MT13VW
Torque increased

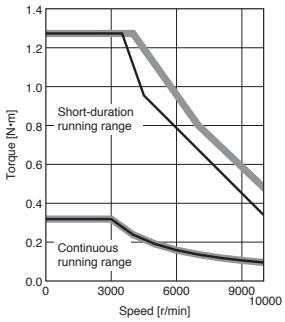

HK-MT1M3VW
Standard torque

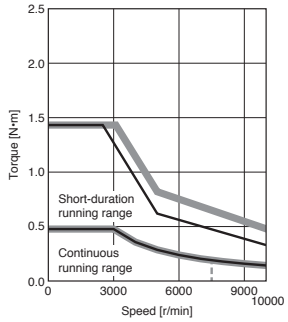

HK-MT1M3VW
Torque increased

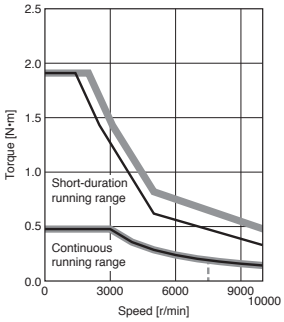

HK-MT23VW
Standard torque

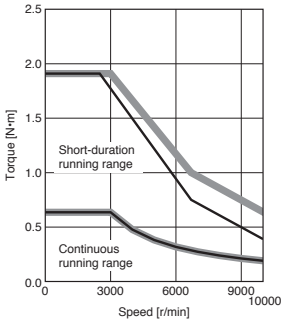

HK-MT23VW
Torque increased

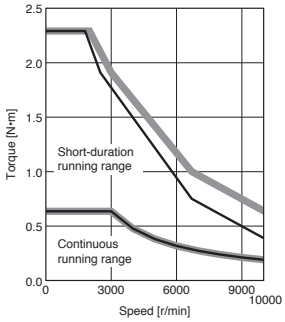

HK-MT43VW
Standard torque

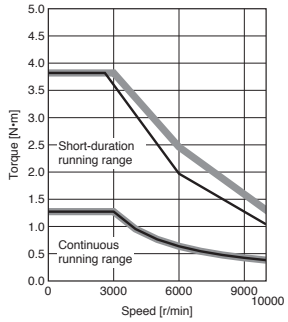

HK-MT43VW
Torque increased

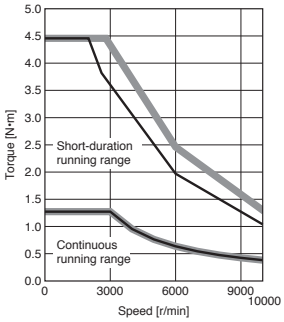

HK-MT63VW
Standard torque

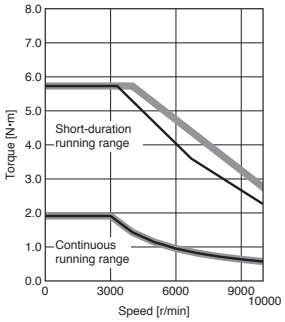

HK-MT63VW
Torque increased

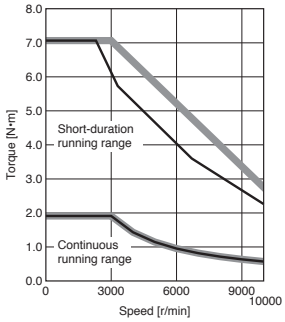

HK-MT7M3VW
Standard torque

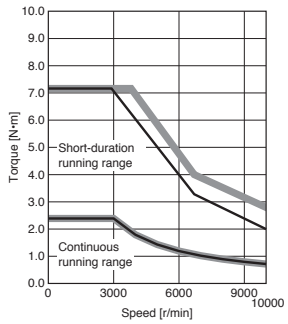

HK-MT7M3VW
Torque increased

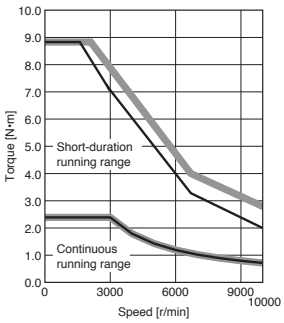

HK-MT103VW (Note 2)
Standard torque

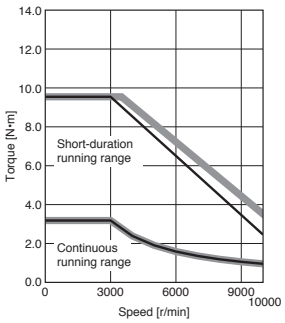

HK-MT103VW
Torque increased

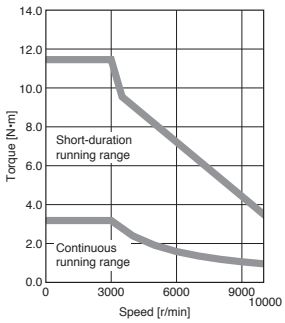

Notes: 1. Torque drops when the power supply voltage is below the specified value. - - - - : A rough indication of the possible continuous running range for 3-phase 170 V AC
2. When using a combination of the servo motors of over 750 W and MR-J5-100_ or MR-J5-200_ with a 1-phase power supply, use the servo amplifiers at 75 % or less of the effective load ratio.

HK-MT Series Dimensions (Note 3, 4, 5)

HK-MT053W(B), HK-MT13W(B), HK-MT1M3W(B)
HK-MT053VW(B), HK-MT13VW(B), HK-MT1M3VW(B)

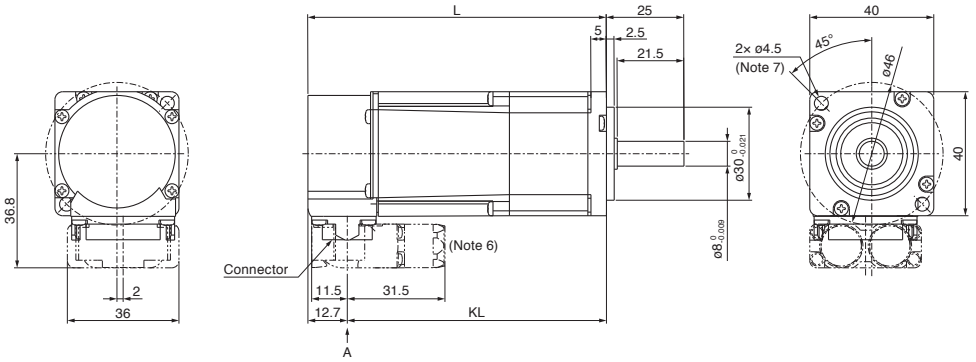

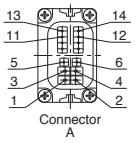

Electromagnetic brake (Note 2)

Pin No.	Signal name
5	B1
6	B2

Power supply

Pin No.	Signal name
1	E
2	U
3	W
4	V

Encoder

Pin No.	Signal name
11	P5
12	MR
13	LG
14	MRR

Model	Variable dimensions (Note 1)	
	L	KL
HK-MT053W(B) HK-MT053VW(B)	61.3 (96.3)	48.6 (83.6)
HK-MT13W(B) HK-MT13VW(B)	74.8 (109.8)	62.1 (97.1)
HK-MT1M3W(B) HK-MT1M3VW(B)	88.3 (123.3)	75.6 (110.6)

[Unit: mm]

HK-MT23W(B), HK-MT43W(B), HK-MT63W(B),
HK-MT23VW(B), HK-MT43VW(B), HK-MT63VW(B)

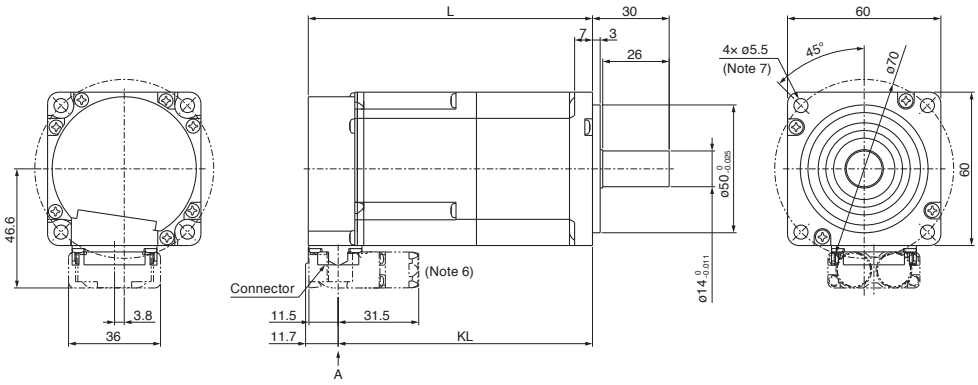

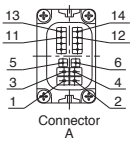

Electromagnetic brake (Note 2)

Pin No.	Signal name
5	B1
6	B2

Power supply

Pin No.	Signal name
1	E
2	U
3	W
4	V

Encoder

Pin No.	Signal name
11	P5
12	MR
13	LG
14	MRR

Model	Variable dimensions (Note 1)	
	L	KL
HK-MT23W(B) HK-MT23VW(B)	76.6 (111.2)	64.9 (99.5)
HK-MT43W(B) HK-MT43VW(B)	96.1 (130.7)	84.4 (119)
HK-MT63W(B) HK-MT63VW(B)	118.6 (153.2)	106.9 (141.5)

[Unit: mm]

Notes:
1. The dimensions in brackets are for the models with an electromagnetic brake.
2. The electromagnetic brake terminals do not have polarity.
3. The dimensions are the same regardless of whether or not an oil seal is installed.
4. Use a friction coupling to fasten a load.
5. The actual dimensions may be up to 3 mm larger than those shown in the drawing because of shifting and variance of parts that occur during the assembly and manufacture of the rotary servo motors. The dimensions and tolerances shown are applicable at a temperature of 20 °C and may vary depending on the ambient temperature. Design the machine to allow for sufficient space.
6. The dimensions are applicable when a dual type motor cable is led to the load side. Refer to "HK-MT Series Connector Dimensions" in this catalog for the dimensions when leading the cable to the opposite to the load side or leading vertically and when using a single type motor cable.
7. Use hexagon socket head cap screws when mounting the servo motor.

HK-MT Series Dimensions (Note 3, 4, 5)

HK-MT7M3W(B), HK-MT103W(B)

HK-MT7M3VW(B), HK-MT103VW(B)

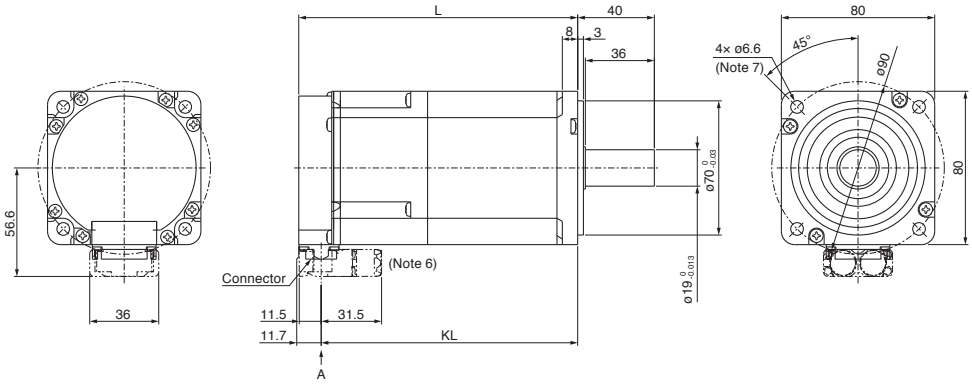

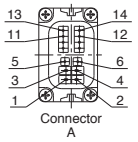

Electromagnetic brake (Note 2)

Pin No.	Signal name
5	B1
6	B2

Power supply

Pin No.	Signal name
1	E
2	U
3	W
4	V

Encoder

Pin No.	Signal name
11	P5
12	MR
13	LG
14	MRR

Model	Variable dimensions (Note 1)	
	L	KL
HK-MT7M3W(B)	110	98.3
HK-MT7M3VW(B)	(145.5)	(133.8)
HK-MT103W(B)	129.5	117.8
HK-MT103VW(B)	(165)	(153.3)

[Unit: mm]

Notes:
1. The dimensions in brackets are for the models with an electromagnetic brake.
2. The electromagnetic brake terminals do not have polarity.
3. The dimensions are the same regardless of whether or not an oil seal is installed.
4. Use a friction coupling to fasten a load.
5. The actual dimensions may be up to 3 mm larger than those shown in the drawing because of shifting and variance of parts that occur during the assembly and manufacture of the rotary servo motors. The dimensions and tolerances shown are applicable at a temperature of 20 °C and may vary depending on the ambient temperature. Design the machine to allow for sufficient space.
6. The dimensions are applicable when a dual type motor cable is led to the load side. Refer to "HK-MT Series Connector Dimensions" in this catalog for the dimensions when leading the cable to the opposite to the load side or leading vertically and when using a single type motor cable.
7. Use hexagon socket head cap screws when mounting the servo motor.

HK-MT Series Connector Dimensions

Cable direction: load side/opposite to load side

Model	Variable dimensions							
	Dual cable type				Single cable type			
	A	B	C	D	A	B	C	D
HK-MT053(V)W HK-MT13(V)W HK-MT1M3(V)W	36.8	36	12.7	31.5	39.6	32	12.7	40
HK-MT23(V)W HK-MT43(V)W HK-MT63(V)W	46.6		11.7		49.4		11.7	
HK-MT7M3(V)W HK-MT103(V)W	56.6				59.4			

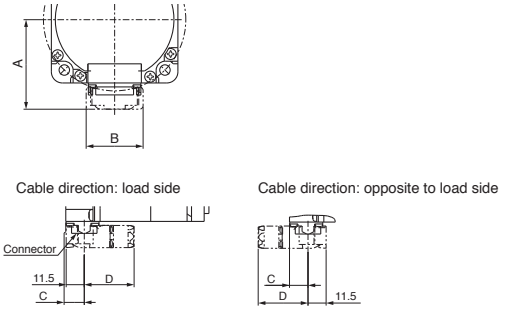

* The drawing shows a dual cable type as an example.

[Unit: mm]

Cable direction: vertical

Model	Variable dimensions					
	Dual cable type			Single cable type		
	A	B	C	A	B	C
HK-MT053(V)W HK-MT13(V)W HK-MT1M3(V)W	63.4	36	12.7	71.9	32	12.7
HK-MT23(V)W HK-MT43(V)W HK-MT63(V)W	73.2		11.7	81.7		11.7
HK-MT7M3(V)W HK-MT103(V)W	83.2			91.7		

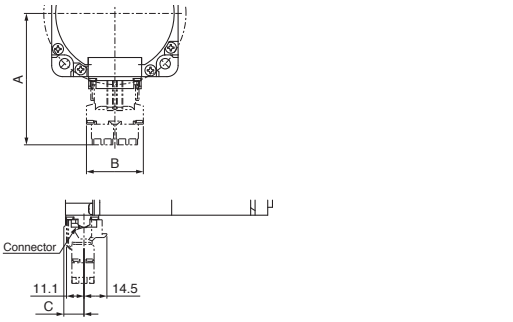

* The drawing shows a dual cable type as an example.

[Unit: mm]

HK-MT Series with Special Shaft Dimensions

Servo motors with the following specifications are also available.

D: D-cut shaft (Note 1)

Model	Variable dimensions	
	Q1	Q2
HK-MT053(V)WD HK-MT13(V)WD HK-MT1M3(V)WD	21.5	20.5

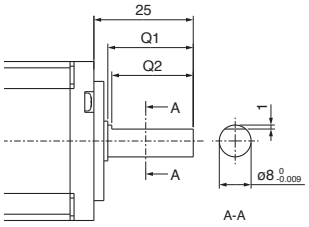

[Unit: mm]

L: L-cut shaft (Note 1)

Model	Variable dimensions	
	Q1	Q2
HK-MT053(V)WL HK-MT13(V)WL HK-MT1M3(V)WL	21.5	20.5

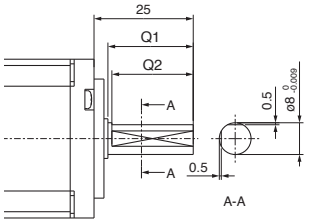

[Unit: mm]

K: Keyed shaft (with a double round-ended key) (Note 1, 3)

Model	Variable dimensions									
	S	LR	Q	W	QK	QL	U	R	T	Y
HK-MT053(V)WK HK-MT13(V)WK HK-MT1M3(V)WK	8 0 -0.009	25	21.5	3	14	5	6.2 0 -0.085	1.5	3	M3×8
HK-MT23(V)WK HK-MT43(V)WK HK-MT63(V)WK	14 0 -0.011	30	26	5	20	3	11 0 -0.085	2.5	5	M4×15
HK-MT7M3(V)WK HK-MT103(V)WK	19 0 -0.013	40	36	6	25	5	15.5 0 -0.1	3	6	M5×20

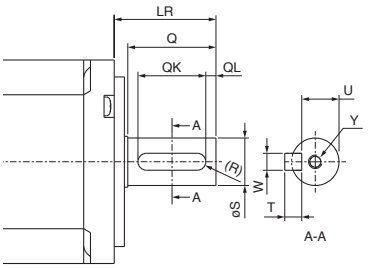

[Unit: mm]

N: Keyed shaft (without a key) (Note 1, 2)

Model	Variable dimensions								
	S	LR	Q	W	QK	QL	U	R	Y
HK-MT053(V)WN HK-MT13(V)WN HK-MT1M3(V)WN	8 0 -0.009	25	21.5	3 -0.004 -0.029	14	5	6.2 0 -0.085	1.5	M3×8
HK-MT23(V)WN HK-MT43(V)WN HK-MT63(V)WN	14 0 -0.011	30	26	5 0 -0.03	20	3	11 0 -0.085	2.5	M4×15
HK-MT7M3(V)WN HK-MT103(V)WN	19 0 -0.013	40	36	6 0 -0.03	25	5	15.5 0 -0.1	3	M5×20

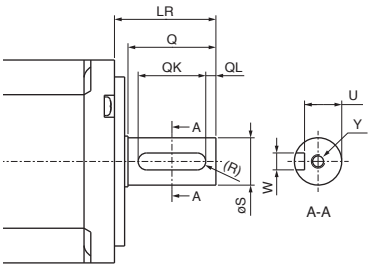

[Unit: mm]

Notes: 1. Do not use the servo motors with a D-cut shaft, an L-cut shaft, or a keyed shaft for frequent start/stop applications as this may cause the damage to the shaft.
2. The servo motor is supplied without a key. The user needs to prepare a key.
3. The key is included as an accessory and not mounted to the shaft.

HK-ST_W (Medium Inertia, Medium Capacity)

Specifications when connected with a 200 V servo amplifier

Flange size		[mm]	130 × 130				
Rotary servo motor model		HK-ST	52W	102W	172W	202AW	302W
Continuous running duty (Note 4)	Rated output	[kW]	0.5	1.0	1.75	2.0	3.0
	Rated torque (Note 3, 5)	[N•m]	2.4 (3.2)	4.8 (6.4)	8.4	9.5 (11.6)	14.3
Maximum torque (Note 3)		[N•m]	7.2 (12.7)	14.3 (19.1)	25.1	28.6 (34.7)	43.0 (50.1)
Rated speed (Note 3, 4)		[r/min]	2000 (1500)	2000 (1500)	2000	2000 (1650)	2000
Maximum speed (Note 4)		[r/min]	4000				2500
Power rate at continuous rated torque (Note 3) [kW/s]	Without electromagnetic brake		9.7 (17.2)	26.3 (46.8)	61.2	53.9 (79.2)	91.5
	With electromagnetic brake		7.0 (12.4)	20.9 (37.2)	51.1	47.8 (70.3)	83.6
Rated current (Note 3)		[A]	3.0 (4.0)	5.3 (7.0)	9.3	11 (13)	11
Maximum current (Note 3)		[A]	11 (19)	18 (24)	32	34 (42)	34 (40)
Moment of inertia J [× 10^{-4} kg•m^2]	Without electromagnetic brake		5.90	8.65	11.4	16.9	22.4
	With electromagnetic brake		8.15	10.9	13.7	19.1	24.5
Recommended load to motor inertia ratio (Note 1)			15 times or less (Note 6)	23 times or less	24 times or less		
Speed/position detector			Batteryless absolute/incremental 26-bit encoder (resolution: 67,108,864 pulses/rev)				
Type			Permanent magnet synchronous motor				
Oil seal			None (Servo motors with an oil seal are available.)				
Electromagnetic brake			None (Servo motors with an electromagnetic brake are available.)				
Thermistor			None				
Insulation class			155 (F)				
Structure			Totally enclosed, natural cooling (IP rating: IP67) (Note 2)				
Vibration resistance *1		[m/s^2]	X: 24.5, Y: 49				
Vibration rank			V10 *3				
Permissible load for the shaft *2	L	[mm]	55				
	Radial	[N]	980				
	Thrust	[N]	490				
Mass [kg]	Without electromagnetic brake		5.0	6.0	7.1	9.1	11
	With electromagnetic brake		6.8	7.8	8.8	11	13

Notes: 1. Contact your local sales office if the load to motor inertia ratio exceeds the value in the table.
2. The shaft-through portion is excluded. Refer to the asterisk 4 of "Annotations for Rotary Servo Motor Specifications" on p. 4-86 in this catalog for the shaft-through portion.
3. The values in brackets are applicable when the torque is increased by combining a larger-capacity servo amplifier. Refer to "Combinations of Rotary Servo Motors and Servo Amplifiers" in this catalog for the available combinations.
4. The continuous running duty and the speed are not guaranteed when the power supply voltage is dropped.
5. When unbalanced torque is generated, such as in a vertical lift machine, keep the unbalanced torque of the machine under 70 % of the servo motor rated torque.
6. When the speed is 3000 r/min or less, the recommended load to motor inertia ratio is 19 times or less.

Refer to "Annotations for Rotary Servo Motor Specifications" on p. 4-86 in this catalog for details about asterisks 1 to 3.

Electromagnetic brake specifications (Note 1)

Model		HK-ST	52WB	102WB	172WB	202AWB	302WB
Type (Note 3)			Spring actuated type safety brake				
Rated voltage (Note 4)			24 V DC (-10 % to 0 %)				
Power consumption		[W] at 20 °C	20			23	
Electromagnetic brake static friction torque (Note 5)		[N•m]	8.5 or higher			16 or higher	
Permissible braking work	Per braking	[J]	400				
	Per hour	[J]	4000				
Electromagnetic brake life (Note 2)	Number of braking times		20000			5000	
	Work per braking	[J]	200			400	

Notes: 1. The electromagnetic brake is for holding. It cannot be used for deceleration applications.
2. Brake lining wear due to braking will increase the brake gap, but the gap is not adjustable. Therefore, the brake life indicates the number of times the brake can be applied before gap adjustment becomes necessary.
3. This type does not have a manual release mechanism. Use a 24 V DC power supply to release the brake electrically.
4. Prepare a power supply exclusively for the electromagnetic brake.
5. The value of the brake static friction torque is the lower limit in the initial state at 20 °C.

HK-ST_W (Medium Inertia, Medium Capacity)

Specifications when connected with a 200 V servo amplifier

Flange size		[mm]	176 × 176					
Rotary servo motor model		HK-ST	7M2UW	172UW	202W	352W	502W	702W
Continuous running duty (Note 4)	Rated output	[kW]	0.75	1.75	2.0	3.5	5.0	7.0
	Rated torque (Note 3, 5)	[N•m]	3.6	8.4	9.5 (12.7)	16.7 (20.3)	23.9 (28.9)	33.4
Maximum torque (Note 3)		[N•m]	10.7 (12.5)	25.1 (29.2)	28.6 (38.2)	50.1 (60.8)	71.6 (86.8)	100
Rated speed (Note 3, 4)		[r/min]	2000		2000 (1500)	2000 (1650)	2000 (1650)	2000
Maximum speed (Note 4)		[r/min]	3000		4000	3500	4000	3000
Power rate at continuous rated torque (Note 3) [kW/s]	Without electromagnetic brake		12.2	36.6	25.1 (44.6)	52.1 (76.5)	80.4 (118)	106
	With electromagnetic brake		10.4	33.4	22.0 (39.2)	47.7 (70.0)	75.2 (110)	101
Rated current (Note 3)		[A]	4.6	9.0	10 (14)	16 (19)	27 (32)	28
Maximum current (Note 3)		[A]	18 (24)	34 (40)	32 (45)	52 (66)	90 (110)	102
Moment of inertia J [× 10^{-4} kg•m^2]	Without electromagnetic brake		10.5	19.1	36.4	53.6	70.8	105
	With electromagnetic brake		12.3	20.9	41.4	58.6	75.8	110
Recommended load to motor inertia ratio (Note 1)			19 times or less		15 times or less (Note 6)	12 times or less (Note 7)	10 times or less (Note 8)	8 times or less (Note 8)
Speed/position detector			Batteryless absolute/incremental 26-bit encoder (resolution: 67,108,864 pulses/rev)					
Type			Permanent magnet synchronous motor					
Oil seal			None (Servo motors with an oil seal are available.)					
Electromagnetic brake			None (Servo motors with an electromagnetic brake are available.)					
Thermistor			None					
Insulation class			155 (F)					
Structure			Totally enclosed, natural cooling (IP rating: IP67) (Note 2)					
Vibration resistance *1		[m/s^2]	X:24.5, Y:24.5		X: 24.5, Y: 49		X: 24.5, Y: 29.4	
Vibration rank			V10 *3					
Permissible load for the shaft *2	L	[mm]	55		79			
	Radial	[N]	980		2058			
	Thrust	[N]	490		980			
Mass [kg]	Without electromagnetic brake		7.5	9.2	13	16	20	27
	With electromagnetic brake		9.5	11	18	21	25	31

Notes:
1. Contact your local sales office if the load to motor inertia ratio exceeds the value in the table.
2. The shaft-through portion is excluded. Refer to the asterisk 4 of "Annotations for Rotary Servo Motor Specifications" on p. 4-86 in this catalog for the shaft-through portion.
3. The values in brackets are applicable when the torque is increased by combining a larger-capacity servo amplifier. Refer to "Combinations of Rotary Servo Motors and Servo Amplifiers" in this catalog for the available combinations.
4. The continuous running duty and the speed are not guaranteed when the power supply voltage is dropped.
5. When unbalanced torque is generated, such as in a vertical lift machine, keep the unbalanced torque of the machine under 70 % of the servo motor rated torque.
6. When the speed is 3000 r/min or less, the recommended load to motor inertia ratio is 20 times or less.
7. When the speed is 3000 r/min or less, the recommended load to motor inertia ratio is 22 times or less.
8. When the speed is 2000 r/min or less, the recommended load to motor inertia ratio is 22 times or less.

Refer to "Annotations for Rotary Servo Motor Specifications" on p. 4-86 in this catalog for details about asterisks 1 to 3.

Electromagnetic brake specifications (Note 1)

Model		HK-ST	7M2UWB	172UWB	202WB	352WB	502WB	702WB
Type (Note 3)			Spring actuated type safety brake					
Rated voltage (Note 4)			24 V DC (-10 % to 0 %)					
Power consumption		[W] at 20 °C	20		34			
Electromagnetic brake static friction torque (Note 5)		[N•m]	8.5 or higher		44 or higher			
Permissible braking work	Per braking	[J]	400		4500			
	Per hour	[J]	4000		45000			
Electromagnetic brake life (Note 2)	Number of braking times		20000		20000			
	Work per braking	[J]	200		1000			

Notes:
1. The electromagnetic brake is for holding. It cannot be used for deceleration applications.
2. Brake lining wear due to braking will increase the brake gap, but the gap is not adjustable. Therefore, the brake life indicates the number of times the brake can be applied before gap adjustment becomes necessary.
3. This type does not have a manual release mechanism. Use a 24 V DC power supply to release the brake electrically.
4. Prepare a power supply exclusively for the electromagnetic brake.
5. The value of the brake static friction torque is the lower limit in the initial state at 20 °C.

HK-ST_W (Medium Inertia, Medium Capacity)

Specifications when connected with a 200 V servo amplifier

Flange size		[mm]	130 × 130	
Rotary servo motor model		HK-ST	353W	503W
Continuous running duty (Note 4)	Rated output (Note 3)	[kW]	2.6 (3.5)	5.0
	Rated torque (Note 3, 5)	[N•m]	8.3 (11.1)	15.9
Maximum torque (Note 3)		[N•m]	24.8 (44.6)	47.8 (63.7)
Rated speed (Note 4)		[r/min]	3000	
Maximum speed (Note 4)		[r/min]	6700	6000
Power rate at continuous rated torque (Note 3) [kW/s]	Without electromagnetic brake		40.5 (73.4)	91.5
	With electromagnetic brake		35.9 (65.0)	84.7
Rated current (Note 3)		[A]	14 (19)	23
Maximum current (Note 3)		[A]	43 (83)	73 (100)
Moment of inertia J [× 10^{-4} kg•m^2]	Without electromagnetic brake		16.9	27.7
	With electromagnetic brake		19.1	29.9
Recommended load to motor inertia ratio (Note 1)			10 times or less	
Speed/position detector			Batteryless absolute/incremental 26-bit encoder (resolution: 67,108,864 pulses/rev)	
Type			Permanent magnet synchronous motor	
Oil seal			None (Servo motors with an oil seal are available.)	
Electromagnetic brake			None (Servo motors with an electromagnetic brake are available.)	
Thermistor			None	
Insulation class			155 (F)	
Structure			Totally enclosed, natural cooling (IP rating: IP67) (Note 2)	
Vibration resistance *1		[m/s^2]	X: 24.5, Y: 49	
Vibration rank			V10 *3	
Permissible load for the shaft *2	L	[mm]	55	
	Radial	[N]	980	
	Thrust	[N]	490	
Mass [kg]	Without electromagnetic brake		9.1	13
	With electromagnetic brake		11	15

Notes: 1. Contact your local sales office if the load to motor inertia ratio exceeds the value in the table.
2. The shaft-through portion is excluded. Refer to the asterisk 4 of "Annotations for Rotary Servo Motor Specifications" on p. 4-86 in this catalog for the shaft-through portion.
3. The values in brackets are applicable when the torque is increased by combining a larger-capacity servo amplifier. Refer to "Combinations of Rotary Servo Motors and Servo Amplifiers" in this catalog for the available combinations.
4. The continuous running duty and the speed are not guaranteed when the power supply voltage is dropped.
5. When unbalanced torque is generated, such as in a vertical lift machine, keep the unbalanced torque of the machine under 70 % of the servo motor rated torque.

Refer to "Annotations for Rotary Servo Motor Specifications" on p. 4-86 in this catalog for details about asterisks 1 to 3.

Electromagnetic brake specifications (Note 1)

Model		HK-ST	353WB	503WB
Type (Note 3)			Spring actuated type safety brake	
Rated voltage (Note 4)			24 V DC (-10 % to 0 %)	
Power consumption		[W] at 20 °C	23	
Electromagnetic brake static friction torque (Note 5)		[N•m]	16 or higher	
Permissible braking work	Per braking	[J]	400	
	Per hour	[J]	4000	
Electromagnetic brake life (Note 2)	Number of braking times		5000	
	Work per braking	[J]	400	

Notes: 1. The electromagnetic brake is for holding. It cannot be used for deceleration applications.
2. Brake lining wear due to braking will increase the brake gap, but the gap is not adjustable. Therefore, the brake life indicates the number of times the brake can be applied before gap adjustment becomes necessary.
3. This type does not have a manual release mechanism. Use a 24 V DC power supply to release the brake electrically.
4. Prepare a power supply exclusively for the electromagnetic brake.
5. The value of the brake static friction torque is the lower limit in the initial state at 20 °C.

HK-ST_4_W (Medium Inertia, Medium Capacity)

Specifications when connected with a 200 V servo amplifier

Flange size		[mm]	130 × 130				
Rotary servo motor model		HK-ST	524W	1024W	1724W	2024AW	3024W
Continuous running duty (Note 4)	Rated output	[kW]	0.3	0.6	0.85	1.0	1.5
	Rated torque (Note 5)	[N•m]	2.9	5.7	8.1	9.5	14.3
Maximum torque (Note 3)		[N•m]	11.5	17.2 (20.1)	24.4	33.4	43.0
Rated speed (Note 4)		[r/min]	1000				
Maximum speed (Note 4)		[r/min]	2000				1200
Power rate at continuous rated torque [kW/s]	Without electromagnetic brake		13.9	37.9	57.8	53.9	91.5
	With electromagnetic brake		10.1	30.1	48.3	47.8	83.6
Rated current		[A]	1.8	3.2	4.5	5.2	5.1
Maximum current (Note 3)		[A]	8.3	11 (13)	17	20	17
Moment of inertia J [× 10^{-4} kg•m^2]	Without electromagnetic brake		5.90	8.65	11.4	16.9	22.4
	With electromagnetic brake		8.15	10.9	13.7	19.1	24.5
Recommended load to motor inertia ratio (Note 1)			15 times or less	24 times or less		20 times or less	24 times or less
Speed/position detector			Batteryless absolute/incremental 26-bit encoder (resolution: 67,108,864 pulses/rev)				
Type			Permanent magnet synchronous motor				
Oil seal			None (Servo motors with an oil seal are available.)				
Electromagnetic brake			None (Servo motors with an electromagnetic brake are available.)				
Thermistor			None				
Insulation class			155 (F)				
Structure			Totally enclosed, natural cooling (IP rating: IP67) (Note 2)				
Vibration resistance *1		[m/s^2]	X: 24.5, Y: 49				
Vibration rank			V10 *3				
Permissible load for the shaft *2	L	[mm]	55				
	Radial	[N]	980				
	Thrust	[N]	490				
Mass [kg]	Without electromagnetic brake		5.0	6.0	7.1	9.1	11
	With electromagnetic brake		6.8	7.8	8.8	11	13

Notes: 1. Contact your local sales office if the load to motor inertia ratio exceeds the value in the table.
2. The shaft-through portion is excluded. Refer to the asterisk 4 of "Annotations for Rotary Servo Motor Specifications" on p. 4-86 in this catalog for the shaft-through portion.
3. The values in brackets are applicable when the torque is increased by combining a larger-capacity servo amplifier. Refer to "Combinations of Rotary Servo Motors and Servo Amplifiers" in this catalog for the available combinations.
4. The continuous running duty and the speed are not guaranteed when the power supply voltage is dropped.
5. When unbalanced torque is generated, such as in a vertical lift machine, keep the unbalanced torque of the machine under 70 % of the servo motor rated torque.

Refer to "Annotations for Rotary Servo Motor Specifications" on p. 4-86 in this catalog for details about asterisks 1 to 3.

Electromagnetic brake specifications (Note 1)

Model		HK-ST	524WB	1024WB	1724WB	2024AWB	3024WB
Type (Note 3)			Spring actuated type safety brake				
Rated voltage (Note 4)			24 V DC (-10 % to 0 %)				
Power consumption		[W] at 20 °C	20			23	
Electromagnetic brake static friction torque (Note 5)		[N•m]	8.5 or higher			16 or higher	
Permissible braking work	Per braking	[J]	400				
	Per hour	[J]	4000				
Electromagnetic brake life (Note 2)	Number of braking times		20000			5000	
	Work per braking	[J]	200			400	

Notes: 1. The electromagnetic brake is for holding. It cannot be used for deceleration applications.
2. Brake lining wear due to braking will increase the brake gap, but the gap is not adjustable. Therefore, the brake life indicates the number of times the brake can be applied before gap adjustment becomes necessary.
3. This type does not have a manual release mechanism. Use a 24 V DC power supply to release the brake electrically.
4. Prepare a power supply exclusively for the electromagnetic brake.
5. The value of the brake static friction torque is the lower limit in the initial state at 20 °C.

HK-ST_4_W (Medium Inertia, Medium Capacity)

Specifications when connected with a 200 V servo amplifier

Flange size		[mm]	176 × 176			
Rotary servo motor model		HK-ST	2024W	3524W	5024W	7024W
Continuous running duty (Note 4)	Rated output	[kW]	1.2	2.0	3.0	4.2
	Rated torque (Note 5)	[N•m]	11.5	19.1	28.6	40.1
Maximum torque (Note 3)		[N•m]	40.1	57.3 (66.8)	85.9	120
Rated speed (Note 4)		[r/min]	1000			
Maximum speed (Note 4)		[r/min]	2000	1500	2000	1500
Power rate at continuous rated torque [kW/s]	Without electromagnetic brake		36.1	68.0	116	153
	With electromagnetic brake		31.7	62.3	108	146
Rated current		[A]	6.0	9.0	16	17
Maximum current (Note 3)		[A]	24	32 (37)	52	60
Moment of inertia J [× 10^{-4} kg•m^2]	Without electromagnetic brake		36.4	53.6	70.8	105
	With electromagnetic brake		41.4	58.6	75.8	110
Recommended load to motor inertia ratio (Note 1)			23 times or less			22 times or less
Speed/position detector			Batteryless absolute/incremental 26-bit encoder (resolution: 67,108,864 pulses/rev)			
Type			Permanent magnet synchronous motor			
Oil seal			None (Servo motors with an oil seal are available.)			
Electromagnetic brake			None (Servo motors with an electromagnetic brake are available.)			
Thermistor			None			
Insulation class			155 (F)			
Structure			Totally enclosed, natural cooling (IP rating: IP67) (Note 2)			
Vibration resistance *1		[m/s^2]	X: 24.5, Y: 49		X: 24.5, Y: 29.4	
Vibration rank			V10 *3			
Permissible load for the shaft *2	L	[mm]	79			
	Radial	[N]	2058			
	Thrust	[N]	980			
Mass [kg]	Without electromagnetic brake		13	16	20	27
	With electromagnetic brake		18	21	25	31

Notes: 1. Contact your local sales office if the load to motor inertia ratio exceeds the value in the table.
2. The shaft-through portion is excluded. Refer to the asterisk 4 of "Annotations for Rotary Servo Motor Specifications" on p. 4-86 in this catalog for the shaft-through portion.
3. The values in brackets are applicable when the torque is increased by combining a larger-capacity servo amplifier. Refer to "Combinations of Rotary Servo Motors and Servo Amplifiers" in this catalog for the available combinations.
4. The continuous running duty and the speed are not guaranteed when the power supply voltage is dropped.
5. When unbalanced torque is generated, such as in a vertical lift machine, keep the unbalanced torque of the machine under 70 % of the servo motor rated torque.

Refer to "Annotations for Rotary Servo Motor Specifications" on p. 4-86 in this catalog for details about asterisks 1 to 3.

Electromagnetic brake specifications (Note 1)

Model		HK-ST	2024WB	3524WB	5024WB	7024WB
Type (Note 3)			Spring actuated type safety brake			
Rated voltage (Note 4)			24 V DC (-10 % to 0 %)			
Power consumption		[W] at 20 °C	34			
Electromagnetic brake static friction torque (Note 5)		[N•m]	44 or higher			
Permissible braking work	Per braking	[J]	4500			
	Per hour	[J]	45000			
Electromagnetic brake life (Note 2)	Number of braking times		20000			
	Work per braking	[J]	1000			

Notes: 1. The electromagnetic brake is for holding. It cannot be used for deceleration applications.
2. Brake lining wear due to braking will increase the brake gap, but the gap is not adjustable. Therefore, the brake life indicates the number of times the brake can be applied before gap adjustment becomes necessary.
3. This type does not have a manual release mechanism. Use a 24 V DC power supply to release the brake electrically.
4. Prepare a power supply exclusively for the electromagnetic brake.
5. The value of the brake static friction torque is the lower limit in the initial state at 20 °C.

HK-ST_4_W (Medium Inertia, Medium Capacity)

Specifications when connected with a 400 V servo amplifier

Flange size			[mm]	130 × 130				
Rotary servo motor model			HK-ST	524W	1024W	1724W	2024AW	3024W
Continuous running duty (Note 4)	Rated output		[kW]	0.5	1.0	1.75	2.0	3.0
	Rated torque (Note 3, 5)		[N•m]	2.4 (3.2)	4.8 (6.4)	8.4	9.5 (11.6)	14.3
Maximum torque (Note 3)			[N•m]	7.2 (12.7)	14.3 (19.1)	25.1	28.6 (34.7)	43.0 (50.1)
Rated speed (Note 3, 4)			[r/min]	2000 (1500)	2000 (1500)	2000	2000 (1650)	2000
Maximum speed (Note 4)			[r/min]	4000				2500
Power rate at continuous rated torque (Note 3) [kW/s]	Without electromagnetic brake			9.7 (17.2)	26.3 (46.8)	61.2	53.9 (79.2)	91.5
	With electromagnetic brake			7.0 (12.4)	20.9 (37.2)	51.1	47.8 (70.3)	83.6
Rated current (Note 3)			[A]	1.5 (2.0)	2.7 (3.5)	4.7	5.2 (6.3)	5.1
Maximum current (Note 3)			[A]	5.1 (9.3)	8.8 (12)	16	17 (21)	17 (20)
Moment of inertia J [× 10^{-4} kg•m^2]	Without electromagnetic brake			5.90	8.65	11.4	16.9	22.4
	With electromagnetic brake			8.15	10.9	13.7	19.1	24.5
Recommended load to motor inertia ratio (Note 1)		MR-J5		4 times or less (Note 6)	4 times or less (Note 7)	4 times or less (Note 8)	8 times or less (Note 8)	24 times or less
		MR-J5D		19 times or less	16 times or less	11 times or less	7 times or less (Note 8)	24 times or less
Speed/position detector				Batteryless absolute/incremental 26-bit encoder (resolution: 67,108,864 pulses/rev)				
Type				Permanent magnet synchronous motor				
Oil seal				None (Servo motors with an oil seal are available.)				
Electromagnetic brake				None (Servo motors with an electromagnetic brake are available.)				
Thermistor				None				
Insulation class				155 (F)				
Structure				Totally enclosed, natural cooling (IP rating: IP67) (Note 2)				
Vibration resistance *1			[m/s^2]	X: 24.5, Y: 49				
Vibration rank				V10 *3				
Permissible load for the shaft *2	L		[mm]	55				
	Radial		[N]	980				
	Thrust		[N]	490				
Mass [kg]	Without electromagnetic brake			5.0	6.0	7.1	9.1	11
	With electromagnetic brake			6.8	7.8	8.8	11	13

Notes: 1. Contact your local sales office if the load to motor inertia ratio exceeds the value in the table.
2. The shaft-through portion is excluded. Refer to the asterisk 4 of "Annotations for Rotary Servo Motor Specifications" on p. 4-86 in this catalog for the shaft-through portion.
3. The values in brackets are applicable when the torque is increased by combining a larger-capacity servo amplifier. Refer to "Combinations of Rotary Servo Motors and Servo Amplifiers" in this catalog for the available combinations.
4. The continuous running duty and the speed are not guaranteed when the power supply voltage is dropped.
5. When unbalanced torque is generated, such as in a vertical lift machine, keep the unbalanced torque of the machine under 70 % of the servo motor rated torque.
6. When the speed is 2000 r/min or less, the recommended load to motor inertia ratio is 19 times or less.
7. When the speed is 2000 r/min or less, the recommended load to motor inertia ratio is 23 times or less.
8. When the speed is 2000 r/min or less, the recommended load to motor inertia ratio is 24 times or less.

Refer to "Annotations for Rotary Servo Motor Specifications" on p. 4-86 in this catalog for details about asterisks 1 to 3.

Electromagnetic brake specifications (Note 1)

Model			HK-ST	524WB	1024WB	1724WB	2024AWB	3024WB
Type (Note 3)				Spring actuated type safety brake				
Rated voltage (Note 4)				24 V DC (-10 % to 0 %)				
Power consumption			[W] at 20 °C	20			23	
Electromagnetic brake static friction torque (Note 5)			[N•m]	8.5 or higher			16 or higher	
Permissible braking work	Per braking		[J]	400				
	Per hour		[J]	4000				
Electromagnetic brake life (Note 2)	Number of braking times			20000			5000	
	Work per braking		[J]	200			400	

Notes: 1. The electromagnetic brake is for holding. It cannot be used for deceleration applications.
2. Brake lining wear due to braking will increase the brake gap, but the gap is not adjustable. Therefore, the brake life indicates the number of times the brake can be applied before gap adjustment becomes necessary.
3. This type does not have a manual release mechanism. Use a 24 V DC power supply to release the brake electrically.
4. Prepare a power supply exclusively for the electromagnetic brake.
5. The value of the brake static friction torque is the lower limit in the initial state at 20 °C.

HK-ST_4_W (Medium Inertia, Medium Capacity)

Specifications when connected with a 400 V servo amplifier

Flange size			[mm]	176 × 176			
Rotary servo motor model			HK-ST	2024W	3524W	5024W	7024W
Continuous running duty (Note 4)	Rated output		[kW]	2.0	3.5	5.0	7.0
	Rated torque (Note 3, 5)		[N•m]	9.5 (12.7)	16.7 (20.3)	23.9 (28.9)	33.4
Maximum torque (Note 3)			[N•m]	28.6 (38.2)	50.1 (60.8)	71.6 (86.8)	100
Rated speed (Note 3, 4)			[r/min]	2000 (1500)	2000 (1650)	2000 (1650)	2000
Maximum speed (Note 4)			[r/min]	4000	3500	4000	3000
Power rate at continuous rated torque (Note 3) [kW/s]	Without electromagnetic brake			25.1 (44.6)	52.1 (76.5)	80.4 (118)	106
	With electromagnetic brake			22.0 (39.2)	47.7 (70.0)	75.2 (110)	101
Rated current (Note 3)			[A]	5.0 (6.7)	7.9 (9.5)	14 (16)	14
Maximum current (Note 3)			[A]	16 (23)	26 (33)	45 (55)	59
Moment of inertia J [× 10^{-4} kg•m^2]	Without electromagnetic brake			36.4	53.6	70.8	105
	With electromagnetic brake			41.4	58.6	75.8	110
Recommended load to motor inertia ratio (Note 1)		MR-J5		4 times or less (Note 6)	5 times or less (Note 7)	4 times or less (Note 7)	8 times or less (Note 7)
		MR-J5D		2 times or less (Note 8)	4 times or less (Note 9)	2 times or less (Note 10)	2 times or less (Note 11)
Speed/position detector				Batteryless absolute/incremental 26-bit encoder (resolution: 67,108,864 pulses/rev)			
Type				Permanent magnet synchronous motor			
Oil seal				None (Servo motors with an oil seal are available.)			
Electromagnetic brake				None (Servo motors with an electromagnetic brake are available.)			
Thermistor				None			
Insulation class				155 (F)			
Structure				Totally enclosed, natural cooling (IP rating: IP67) (Note 2)			
Vibration resistance *1			[m/s^2]	X: 24.5, Y: 49		X: 24.5, Y: 29.4	
Vibration rank				V10 *3			
Permissible load for the shaft *2	L		[mm]	79			
	Radial		[N]	2058			
	Thrust		[N]	980			
Mass [kg]	Without electromagnetic brake			13	16	20	27
	With electromagnetic brake			18	21	25	31

Notes:
1. Contact your local sales office if the load to motor inertia ratio exceeds the value in the table.
2. The shaft-through portion is excluded. Refer to the asterisk 4 of "Annotations for Rotary Servo Motor Specifications" on p. 4-86 in this catalog for the shaft-through portion.
3. The values in brackets are applicable when the torque is increased by combining a larger-capacity servo amplifier. Refer to "Combinations of Rotary Servo Motors and Servo Amplifiers" in this catalog for the available combinations.
4. The continuous running duty and the speed are not guaranteed when the power supply voltage is dropped.
5. When unbalanced torque is generated, such as in a vertical lift machine, keep the unbalanced torque of the machine under 70 % of the servo motor rated torque.
6. When the speed is 2000 r/min or less, the recommended load to motor inertia ratio is 20 times or less.
7. When the speed is 2000 r/min or less, the recommended load to motor inertia ratio is 22 times or less.
8. When the speed is 2000 r/min or less, the recommended load to motor inertia ratio is 12 times or less.
9. When the speed is 2000 r/min or less, the recommended load to motor inertia ratio is 14 times or less.
10. When the speed is 2000 r/min or less, the recommended load to motor inertia ratio is 10 times or less.
11. When the speed is 2000 r/min or less, the recommended load to motor inertia ratio is 7 times or less.

Refer to "Annotations for Rotary Servo Motor Specifications" on p. 4-86 in this catalog for details about asterisks 1 to 3.

Electromagnetic brake specifications (Note 1)

Model		HK-ST	2024WB	3524WB	5024WB	7024WB
Type (Note 3)			Spring actuated type safety brake			
Rated voltage (Note 4)			24 V DC (-10 % to 0 %)			
Power consumption		[W] at 20 °C	34			
Electromagnetic brake static friction torque (Note 5)		[N•m]	44 or higher			
Permissible braking work	Per braking	[J]	4500			
	Per hour	[J]	45000			
Electromagnetic brake life (Note 2)	Number of braking times		20000			
	Work per braking	[J]	1000			

Notes:
1. The electromagnetic brake is for holding. It cannot be used for deceleration applications.
2. Brake lining wear due to braking will increase the brake gap, but the gap is not adjustable. Therefore, the brake life indicates the number of times the brake can be applied before gap adjustment becomes necessary.
3. This type does not have a manual release mechanism. Use a 24 V DC power supply to release the brake electrically.
4. Prepare a power supply exclusively for the electromagnetic brake.
5. The value of the brake static friction torque is the lower limit in the initial state at 20 °C.

HK-ST_4_W (Medium Inertia, Medium Capacity)

Specifications when connected with a 400 V servo amplifier

Flange size		[mm]	130 × 130	
Rotary servo motor model		HK-ST	3534W	5034W
Continuous running duty (Note 4)	Rated output (Note 3)	[kW]	2.6 (3.5)	5.0
	Rated torque (Note 3, 5)	[N•m]	8.3 (11.1)	15.9
Maximum torque (Note 3)		[N•m]	24.8 (44.6)	47.8 (63.7)
Rated speed (Note 4)		[r/min]	3000	
Maximum speed (Note 4)		[r/min]	6700	6000
Power rate at continuous rated torque (Note 3) [kW/s]	Without electromagnetic brake		40.5 (73.4)	91.5
	With electromagnetic brake		35.9 (65.0)	84.7
Rated current (Note 3)		[A]	6.9 (9.2)	12
Maximum current (Note 3)		[A]	22 (42)	37 (52)
Moment of inertia J [× 10^{-4} kg•m^2]	Without electromagnetic brake		16.9	27.7
	With electromagnetic brake		19.1	29.9
Recommended load to motor inertia ratio (Note 1)	MR-J5		10 times or less	7 times or less
	MR-J5D		3 times or less (Note 6)	2 times or less (Note 7)
Speed/position detector			Batteryless absolute/incremental 26-bit encoder (resolution: 67,108,864 pulses/rev)	
Type			Permanent magnet synchronous motor	
Oil seal			None (Servo motors with an oil seal are available.)	
Electromagnetic brake			None (Servo motors with an electromagnetic brake are available.)	
Thermistor			None	
Insulation class			155 (F)	
Structure			Totally enclosed, natural cooling (IP rating: IP67) (Note 2)	
Vibration resistance *1		[m/s^2]	X: 24.5, Y: 49	
Vibration rank			V10 *3	
Permissible load for the shaft *2	L	[mm]	55	
	Radial	[N]	980	
	Thrust	[N]	490	
Mass [kg]	Without electromagnetic brake		9.1	13
	With electromagnetic brake		11	15

Notes: 1. Contact your local sales office if the load to motor inertia ratio exceeds the value in the table.
2. The shaft-through portion is excluded. Refer to the asterisk 4 of "Annotations for Rotary Servo Motor Specifications" on p. 4-86 in this catalog for the shaft-through portion.
3. The values in brackets are applicable when the torque is increased by combining a larger-capacity servo amplifier. Refer to "Combinations of Rotary Servo Motors and Servo Amplifiers" in this catalog for the available combinations.
4. The continuous running duty and the speed are not guaranteed when the power supply voltage is dropped.
5. When unbalanced torque is generated, such as in a vertical lift machine, keep the unbalanced torque of the machine under 70 % of the servo motor rated torque.
6. When the speed is 3000 r/min or less, the recommended load to motor inertia ratio is 20 times or less.
7. When the speed is 3000 r/min or less, the recommended load to motor inertia ratio is 12 times or less.

Refer to "Annotations for Rotary Servo Motor Specifications" on p. 4-86 in this catalog for details about asterisks 1 to 3.

Electromagnetic brake specifications (Note 1)

Model		HK-ST	3534WB	5034WB
Type (Note 3)			Spring actuated type safety brake	
Rated voltage (Note 4)			24 V DC (-10 % to 0 %)	
Power consumption		[W] at 20 °C	23	
Electromagnetic brake static friction torque (Note 5)		[N•m]	16 or higher	
Permissible braking work	Per braking	[J]	400	
	Per hour	[J]	4000	
Electromagnetic brake life (Note 2)	Number of braking times		5000	
	Work per braking	[J]	400	

Notes: 1. The electromagnetic brake is for holding. It cannot be used for deceleration applications.
2. Brake lining wear due to braking will increase the brake gap, but the gap is not adjustable. Therefore, the brake life indicates the number of times the brake can be applied before gap adjustment becomes necessary.
3. This type does not have a manual release mechanism. Use a 24 V DC power supply to release the brake electrically.
4. Prepare a power supply exclusively for the electromagnetic brake.
5. The value of the brake static friction torque is the lower limit in the initial state at 20 °C.

HK-ST_W Torque Characteristics (Note 1)

When connected with a 200 V servo amplifier

: For 3-phase 200 V AC
: For 1-phase 200 V AC

HK-ST52W
Standard torque

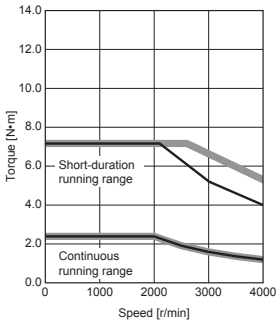

HK-ST52W
Torque increased

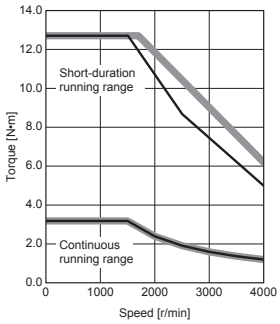

HK-ST102W (Note 2)
Standard torque

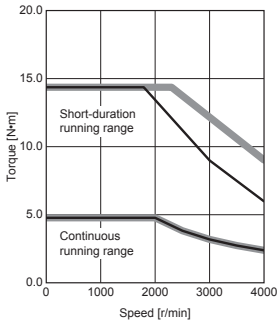

HK-ST102W (Note 2)
Torque increased

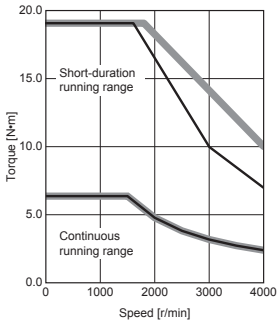

HK-ST172W (Note 2)
Standard torque

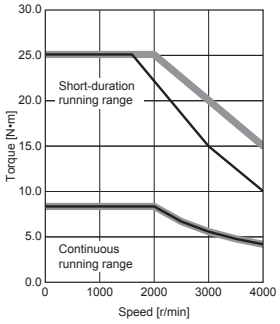

HK-ST202AW (Note 2)
Standard torque

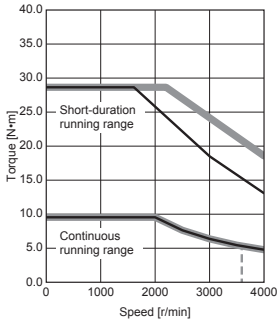

HK-ST202AW
Torque increased

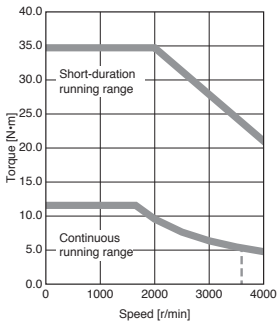

HK-ST302W
Standard torque

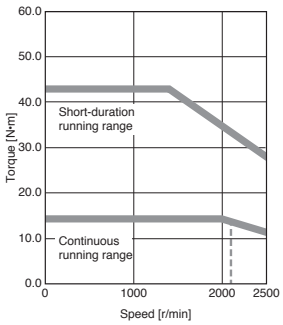

HK-ST302W
Torque increased

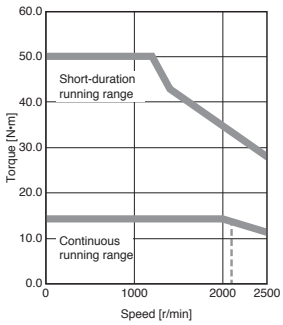

Notes: 1. Torque drops when the power supply voltage is below the specified value. - - - - : A rough indication of the possible continuous running range for 3-phase 170 V AC
2. When using a combination of the servo motors of over 750 W and MR-J5-100_ or MR-J5-200_ with a 1-phase power supply, use the servo amplifiers at 75 % or less of the effective load ratio.

HK-ST_W Torque Characteristics (Note 1)

When connected with a 200 V servo amplifier

: For 3-phase 200 V AC
: For 1-phase 200 V AC

HK-ST7M2UW
Standard torque

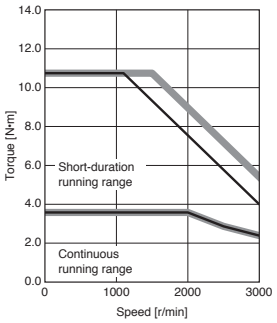

HK-ST7M2UW
Torque increased

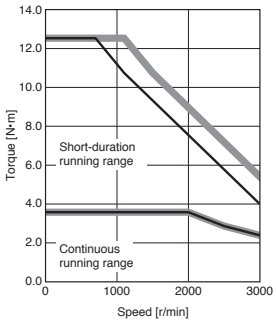

HK-ST172UW (Note 2)
Standard torque

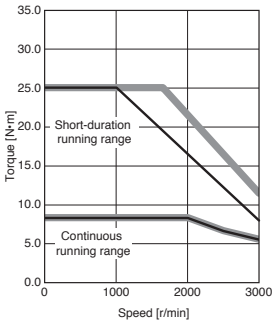

HK-ST172UW
Torque increased

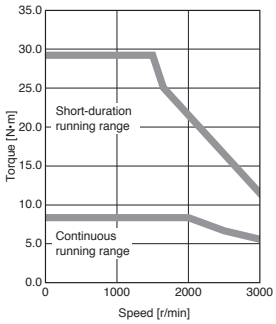

HK-ST202W (Note 2)
Standard torque

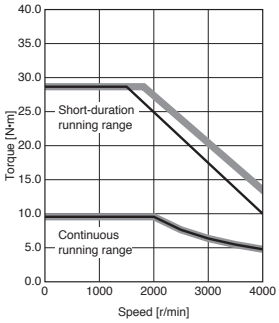

HK-ST202W
Torque increased

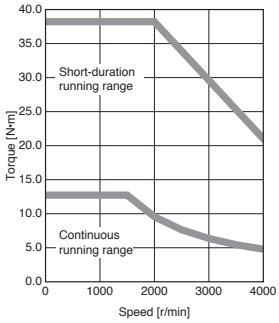

HK-ST352W
Standard torque

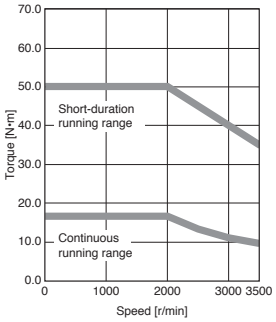

HK-ST352W
Torque increased

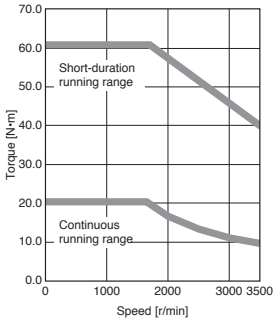

HK-ST502W
Standard torque

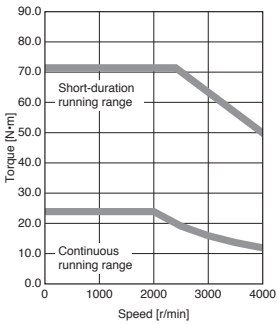

HK-ST502W
Torque increased

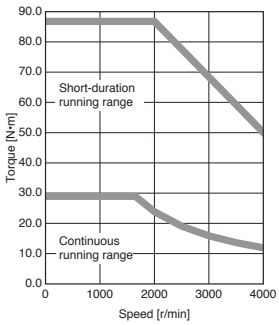

HK-ST702W
Standard torque

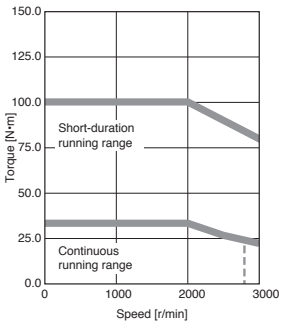

HK-ST353W
Standard torque

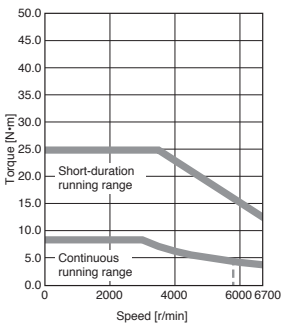

HK-ST353W
Torque increased

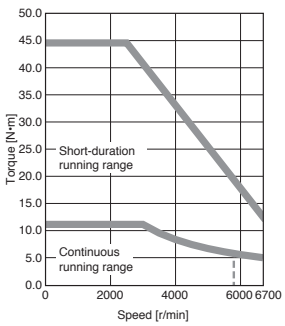

HK-ST503W
Standard torque

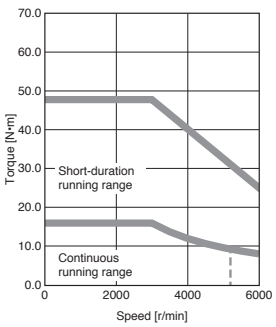

HK-ST503W
Torque increased

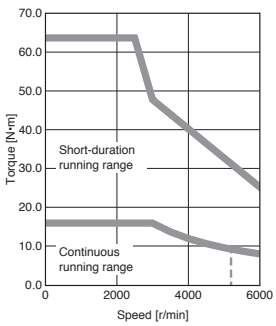

Notes: 1. Torque drops when the power supply voltage is below the specified value. - - - - : A rough indication of the possible continuous running range for 3-phase 170 V AC
2. When using a combination of the servo motors of over 750 W and MR-J5-100_ or MR-J5-200_ with a 1-phase power supply, use the servo amplifiers at 75 % or less of the effective load ratio.

HK-ST_4_W Torque Characteristics (Note 1)

When connected with a 200 V servo amplifier

: For 3-phase 200 V AC
: For 1-phase 200 V AC

HK-ST524W
Standard torque

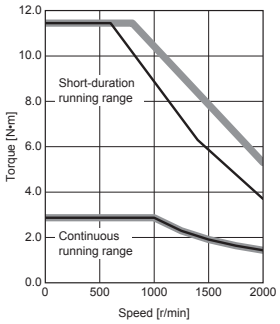

HK-ST1024W
Standard torque

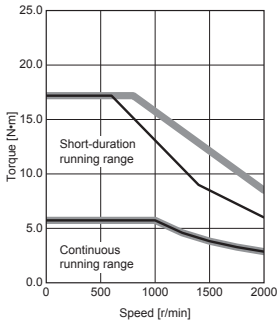

HK-ST1024W
Torque increased

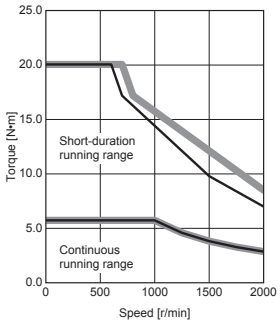

HK-ST1724W (Note 2)
Standard torque

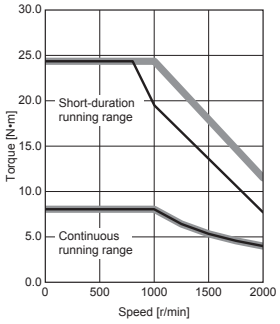

HK-ST2024AW (Note 2)
Standard torque

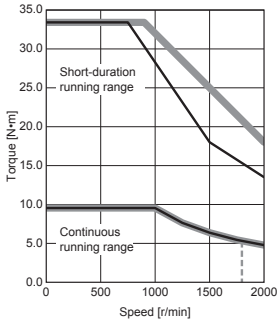

HK-ST3024W (Note 2)
Standard torque

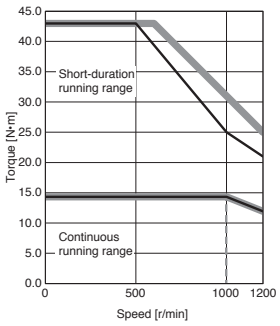

HK-ST2024W (Note 2)
Standard torque

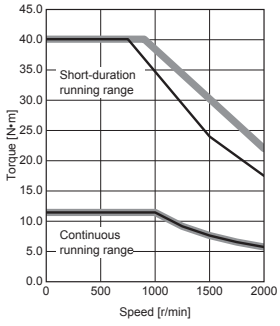

Notes: 1. Torque drops when the power supply voltage is below the specified value. - - - - : A rough indication of the possible continuous running range for 3-phase 170 V AC
2. When using a combination of the servo motors of over 750 W and MR-J5-100_ or MR-J5-200_ with a 1-phase power supply, use the servo amplifiers at 75 % or less of the effective load ratio.

HK-ST_4_W Torque Characteristics (Note 1)

When connected with a 200 V servo amplifier

: For 3-phase 200 V AC
: For 1-phase 200 V AC

HK-ST3524W (Note 2)

Standard torque

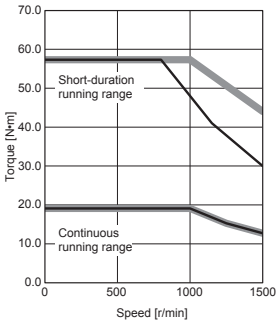

HK-ST3524W

Torque increased

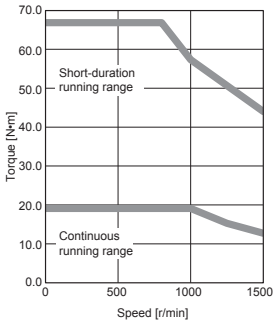

HK-ST5024W

Standard torque

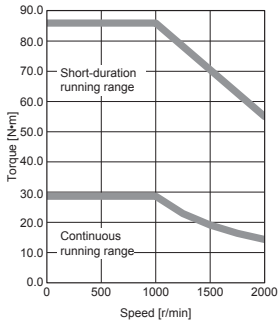

HK-ST7024W

Standard torque

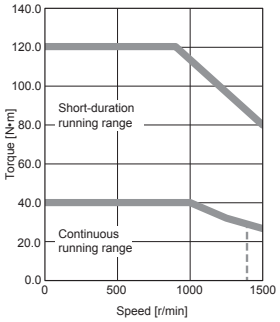

Notes: 1. Torque drops when the power supply voltage is below the specified value. - - - - : A rough indication of the possible continuous running range for 3-phase 170 V AC
2. When using a combination of the servo motors of over 750 W and MR-J5-100_ or MR-J5-200_ with a 1-phase power supply, use the servo amplifiers at 75 % or less of the effective load ratio.

HK-ST_4_W Torque Characteristics (Note 1)

When connected with a 400 V servo amplifier

: For 3-phase 400 V AC
: For 3-phase 380 V AC

HK-ST524W
Standard torque

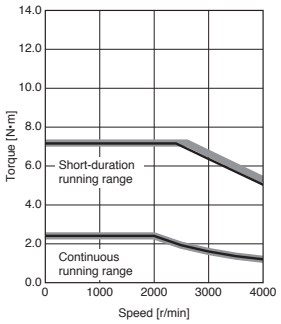

HK-ST524W
Torque increased

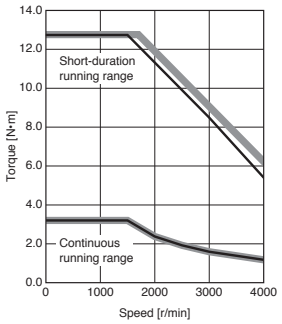

HK-ST1024W
Standard torque

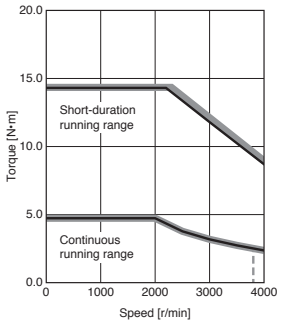

HK-ST1024W
Torque increased

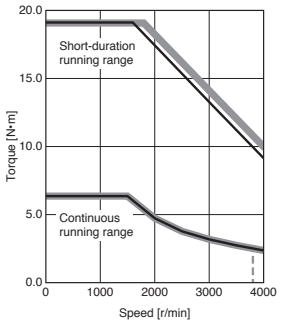

HK-ST1724W
Standard torque

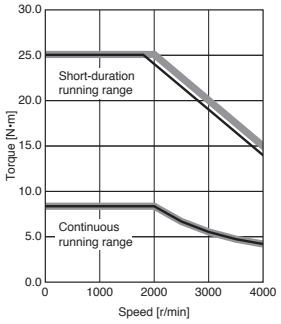

HK-ST2024AW
Standard torque

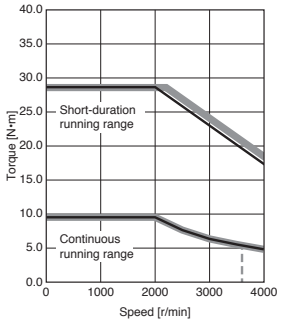

HK-ST2024AW
Torque increased

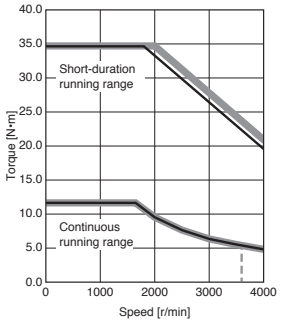

HK-ST3024W
Standard torque

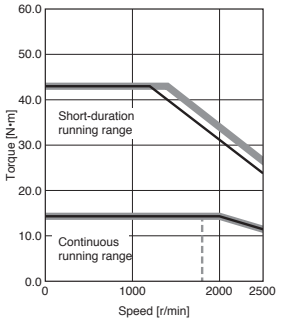

HK-ST3024W
Torque increased

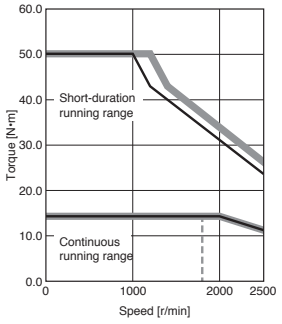

Notes: 1. Torque drops when the power supply voltage is below the specified value. - - - - : A rough indication of the possible continuous running range for 3-phase 323 V AC

HK-ST_4_W Torque Characteristics (Note 1)

When connected with a 400 V servo amplifier

: For 3-phase 400 V AC
: For 3-phase 380 V AC

HK-ST2024W
Standard torque

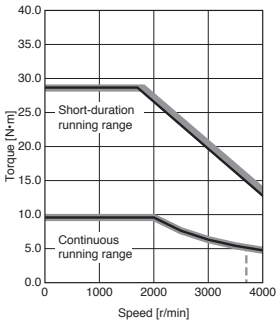

HK-ST2024W
Torque increased

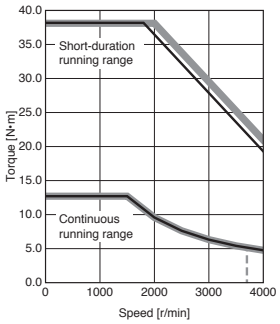

HK-ST3524W
Standard torque

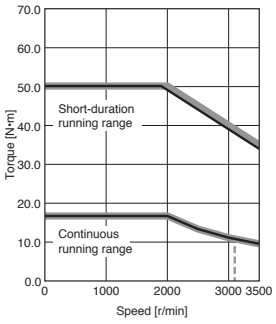

HK-ST3524W
Torque increased

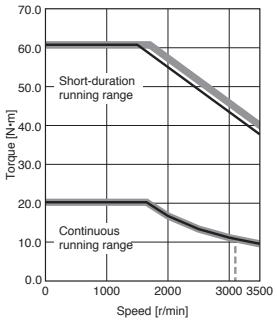

HK-ST5024W
Standard torque

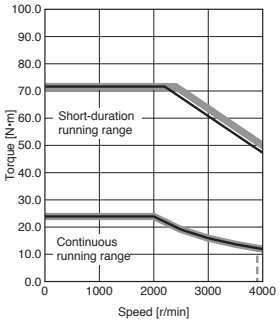

HK-ST5024W
Torque increased

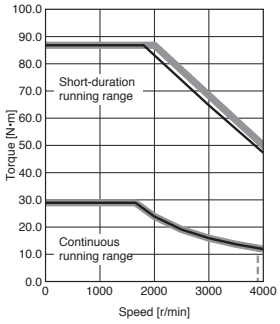

HK-ST7024W
Standard torque

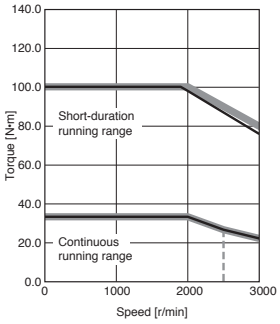

HK-ST3534W
Standard torque

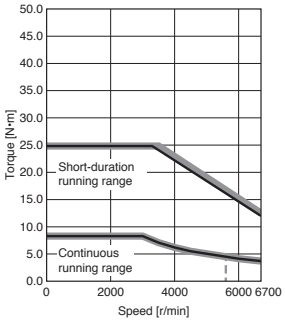

HK-ST3534W
Torque increased

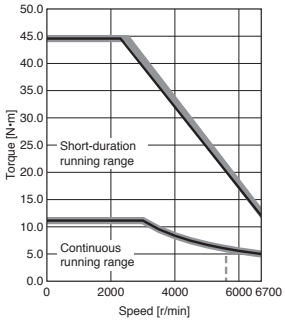

HK-ST5034W
Standard torque

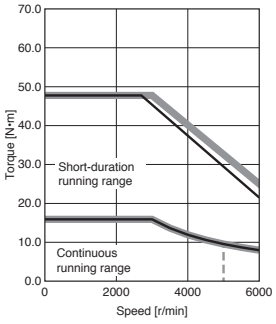

HK-ST5034W
Torque increased

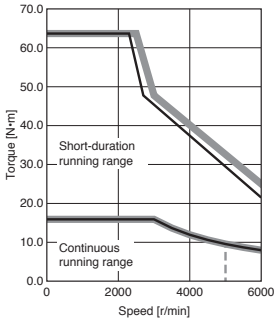

Notes: 1. Torque drops when the power supply voltage is below the specified value. - - - - : A rough indication of the possible continuous running range for 3-phase 323 V AC

HK-ST Series Dimensions (Note 3, 4, 6)

HK-ST52W(B), HK-ST102W(B), HK-ST172W(B), HK-ST202AW(B), HK-ST302W(B),
HK-ST524W(B), HK-ST1024W(B), HK-ST1724W(B), HK-ST2024AW(B), HK-ST3024W(B)

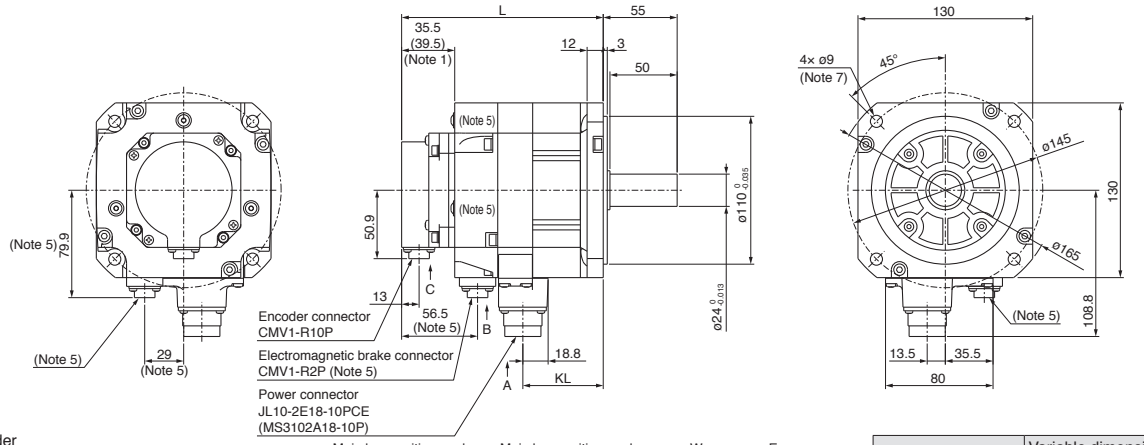

Encoder

Pin No.	Signal name	Pin No.	Signal name
1	MR	6	-
2	MRR	7	-
3	-	8	P5
4	-	9	-
5	LG	10	SHD

Model	Variable dimensions (Note 1)	
	L	KL
HK-ST52W(B) HK-ST524W(B)	115.5 (150)	59.8
HK-ST102W(B) HK-ST1024W(B)	126.5 (161)	70.8
HK-ST172W(B) HK-ST1724W(B)	137.5 (172)	81.8
HK-ST202AW(B) HK-ST2024AW(B)	159.5 (194)	103.8
HK-ST302W(B) HK-ST3024W(B)	181.5 (216)	125.8

[Unit: mm]

HK-ST7M2UW(B), HK-ST172UW(B)

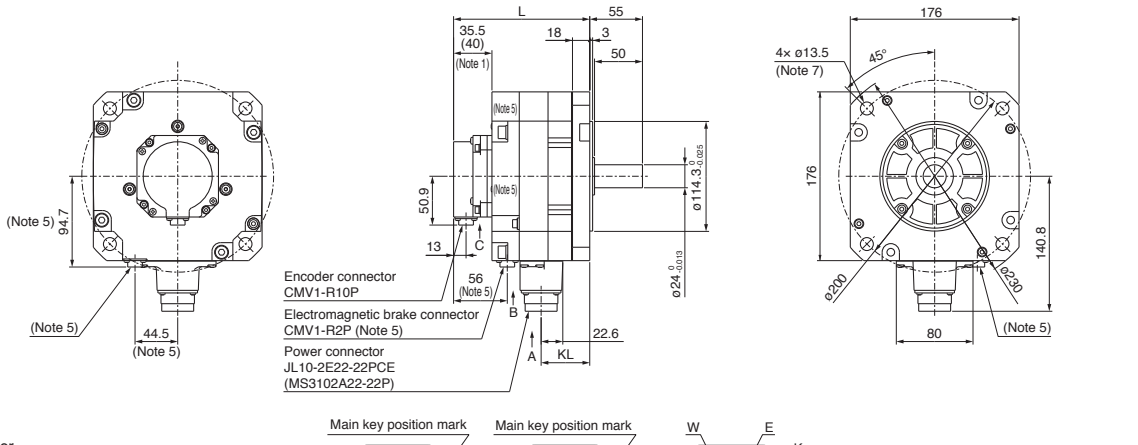

Encoder

Pin No.	Signal name	Pin No.	Signal name
1	MR	6	-
2	MRR	7	-
3	-	8	P5
4	-	9	-
5	LG	10	SHD

Model	Variable dimensions (Note 1)	
	L	KL
HK-ST7M2UW(B)	108.5 (142)	50.7
HK-ST172UW(B)	118.5 (152)	60.7

[Unit: mm]

Notes: 1. The dimensions in brackets are for the models with an electromagnetic brake.
2. The electromagnetic brake terminals do not have polarity.
3. The dimensions are the same regardless of whether or not an oil seal is installed.
4. Use a friction coupling to fasten a load.
5. Only for the models with an electromagnetic brake.
6. The actual dimensions may be up to 3 mm larger than those shown in the drawing because of shifting and variance of parts that occur during the assembly and manufacture of the rotary servo motors. The dimensions and tolerances shown are applicable at a temperature of 20 °C and may vary depending on the ambient temperature. Design the machine to allow for sufficient space.
7. Use hexagon socket head cap screws when mounting the servo motor.

HK-ST Series Dimensions (Note 3, 4, 7)

HK-ST202W(B), HK-ST352W(B), HK-ST502W(B), HK-ST702W(B),
HK-ST2024W(B), HK-ST3524W(B), HK-ST5024W(B), HK-ST7024W(B)

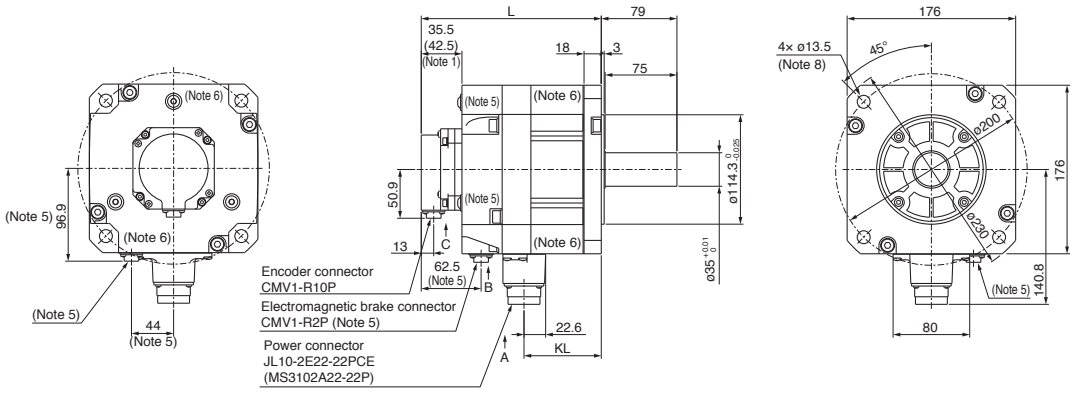

Encoder

Pin No.	Signal name	Pin No.	Signal name
1	MR	6	-
2	MRR	7	-
3	-	8	P5
4	-	9	-
5	LG	10	SHD

Model	Variable dimensions (Note 1)	
	L	KL
HK-ST202W(B) HK-ST2024W(B)	138.5 (188)	80.7
HK-ST352W(B) HK-ST3524W(B)	158.5 (208)	100.7
HK-ST502W(B) HK-ST5024W(B)	178.5 (228)	120.7
HK-ST702W(B) HK-ST7024W(B)	218.5 (268)	160.7

[Unit: mm]

HK-ST353W(B), HK-ST503W(B),
HK-ST3534W(B), HK-ST5034W(B)

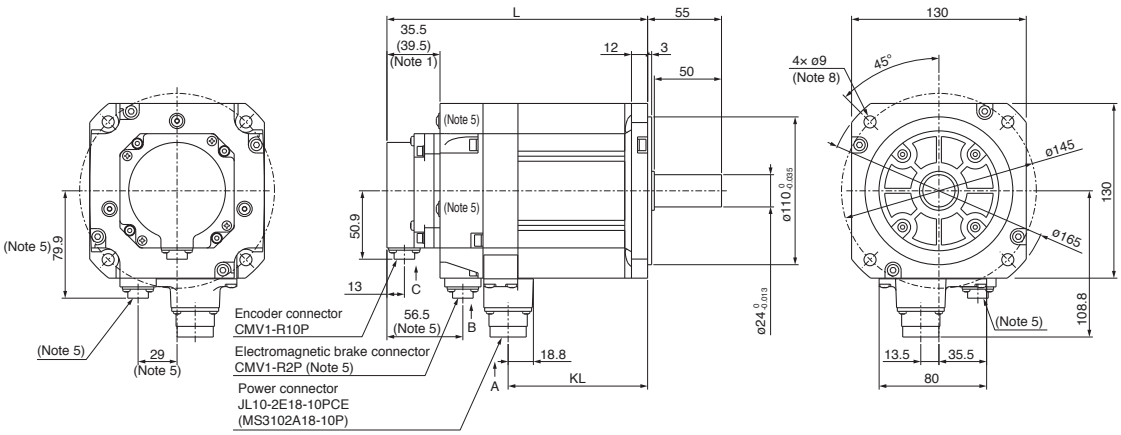

Encoder

Pin No.	Signal name	Pin No.	Signal name
1	MR	6	-
2	MRR	7	-
3	-	8	P5
4	-	9	-
5	LG	10	SHD

Model	Variable dimensions (Note 1)	
	L	KL
HK-ST353W(B) HK-ST3534W(B)	159.5 (194)	103.8
HK-ST503W(B) HK-ST5034W(B)	203.5 (238)	147.8

[Unit: mm]

Notes: 1. The dimensions in brackets are for the models with an electromagnetic brake.
2. The electromagnetic brake terminals do not have polarity.
3. The dimensions are the same regardless of whether or not an oil seal is installed.
4. Use a friction coupling to fasten a load.
5. Only for the models with an electromagnetic brake.
6. HK-ST352W(B), HK-ST3524W(B), HK-ST502W(B), HK-ST5024W(B), HK-ST702W(B), and HK-ST7024W(B) have screw holes (M8) for eyebolts.
7. The actual dimensions may be up to 3 mm larger than those shown in the drawing because of shifting and variance of parts that occur during the assembly and manufacture of the rotary servo motors. The dimensions and tolerances shown are applicable at a temperature of 20 °C and may vary depending on the ambient temperature. Design the machine to allow for sufficient space.
8. Use hexagon socket head cap screws when mounting the servo motor.

HK-ST Series with Special Shaft Dimensions

Servo motors with the following specifications are also available.

K: Keyed shaft (with a double round-ended key) (Note 1, 3)

Model	Variable dimensions									
	S	LR	Q	W	QK	QL	U	R	T	Y
HK-ST52(4)WK HK-ST102(4)WK HK-ST172(4)WK HK-ST202(4)AWK HK-ST302(4)WK HK-ST353(4)WK HK-ST503(4)WK HK-ST7M2UWK HK-ST172UWK	$24^{0}_{-0.013}$	55	50	8	36	5	$20^{0}_{-0.1}$	4	7	M8×20
HK-ST202(4)WK HK-ST352(4)WK HK-ST502(4)WK HK-ST702(4)WK	$35^{+0.010}_{0}$	79	75	10	55	5	$30^{0}_{-0.12}$	5	8	M8×20

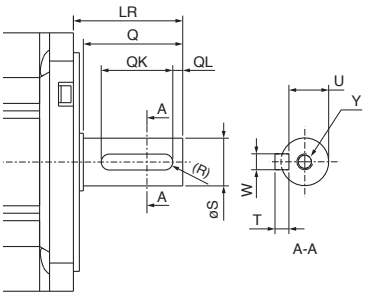

[Unit: mm]

N: Keyed shaft (without a key) (Note 1, 2)

Model	Variable dimensions								
	S	LR	Q	W	QK	QL	U	R	Y
HK-ST52(4)WN HK-ST102(4)WN HK-ST172(4)WN HK-ST202(4)AWN HK-ST302(4)WN HK-ST353(4)WN HK-ST503(4)WN HK-ST7M2UWN HK-ST172UWN	$24^{0}_{-0.013}$	55	50	$8^{0}_{-0.036}$	36	5	$20^{0}_{-0.1}$	4	M8×20
HK-ST202(4)WN HK-ST352(4)WN HK-ST502(4)WN HK-ST702(4)WN	$35^{+0.010}_{0}$	79	75	$10^{0}_{-0.036}$	55	5	$30^{0}_{-0.12}$	5	M8×20

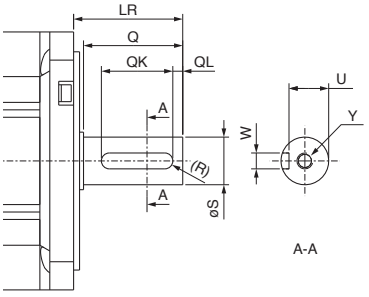

[Unit: mm]

Notes: 1. Do not use the servo motors with a keyed shaft for frequent start/stop applications as this may cause the damage to the shaft.
2. The servo motor is supplied without a key. The user needs to prepare a key.
3. The key is included as an accessory and not mounted to the shaft.

HK-ST Series Geared Servo Motor Specifications

With a gear reducer for general industrial machines, flange mounting: G1

Model HK-ST	Output [kW]	Reduction ratio	Moment of inertia J [× 10^{-4} kg•m^2] (Note 1)		Permissible load to motor inertia ratio (Note 2) (when converted into the servo motor shaft)	Permissible load for the shaft *1			Mass [kg]		Lubrication method (Note 5)	Mounting direction
			Without electro-magnetic brake	With electro-magnetic brake		Q [mm]	Radial [N]	Thrust [N]	Without electro-magnetic brake	With electro-magnetic brake		
52G1 524G1	0.5	1/6	6.72	8.97	5 times or less	35	2058	1470	17	19	Grease (filled)	Any direction
		1/11	6.29	8.54		35	2391	1470	17	19		
		1/17	6.17	8.42		35	2832	1470	17	19		
		1/29	6.11	8.36		35	3273	1470	17	19		
		1/35	6.90	9.15		55	5253	2940	27	29		
		1/43	6.86	9.11		55	5253	2940	27	29		
		1/59	6.82	9.07		55	5880	2940	27	29		
102G1 1024G1	1.0	1/6	11.9	14.1	5.4 times or less	55	2842	2352	29	31	Grease (filled)	Any direction
		1/11	10.4	12.6		55	3273	2764	29	31		
		1/17	9.95	12.2		55	3646	2940	29	31		
		1/29	9.65	11.9		55	4410	2940	29	31		
		1/35	9.65	11.9		55	5253	2940	29	31		
		1/43	10.9	13.1		70	6047	3920	48	50	Oil (Note 3)	Shaft horizontal (Note 4)
		1/59	16.2	18.4		90	9741	6860	80	82		
152G1 1524G1 (Note 6)	1.5	1/6	14.6	16.9	5.7 times or less	55	2842	2352	30	32	Grease (filled)	Any direction
		1/11	13.1	15.4		55	3273	2764	30	32		
		1/17	12.7	15.0		55	3646	2940	30	32		
		1/29	13.8	16.1		70	5135	3920	49	51	Oil (Note 3)	Shaft horizontal (Note 4)
		1/35	13.7	16.0		70	6047	3920	49	51		
		1/43	19.0	21.3		90	8555	6860	81	83		
		1/59	18.9	21.2		90	9741	6860	81	83		
202G1 2024G1	2.0	1/6	39.6	44.6	5.2 times or less	55	2842	2352	37	42	Grease (filled)	Any direction
		1/11	38.0	43.0		55	3273	2764	37	42		
		1/17	37.7	42.7		55	3646	2940	37	42		
		1/29	44.4	49.4		90	7291	6860	88	93	Oil (Note 3)	Shaft horizontal (Note 4)
		1/35	44.1	49.1		90	8555	6860	88	93		
		1/43	43.9	48.9		90	8555	6860	88	93		
		1/59	43.8	48.8		90	9741	6860	88	93		
352G1 3524G1	3.5	1/6	62.1	67.1	5.9 times or less	70	3332	3920	59	63	Oil (Note 3)	Shaft horizontal (Note 4)
		1/11	57.8	62.8		70	3871	3920	59	63		
		1/17	56.5	61.5		70	4420	3920	59	63		
		1/29	61.6	66.6		90	7291	6860	91	96		
		1/35	61.3	66.3		90	8555	6860	91	96		
		1/43	80.0	85.0		90	11662	9800	135	140	Oil	
		1/59	79.0	84.0		90	13132	9800	135	140		
502G1 5024G1	5.0	1/6	97.1	102	5.7 times or less	90	5448	5000	94	99	Oil	Shaft horizontal (Note 4)
		1/11	85.1	90.1		90	5488	6292	94	99	Oil (Note 3)	
		1/17	81.1	86.1		90	6468	6860	94	99		
		1/29	112	117		110	13426	13720	165	170	Oil	
		1/35	111	116		110	16072	13720	165	170		
		1/43	110	115		110	16072	13720	165	170		
		1/59	109	114		110	16072	13720	165	170		
702G1 7024G1	7.0	1/6	131	136	5.8 times or less	90	7526	5000	100	105	Oil	Shaft horizontal (Note 4)
		1/11	144	149		90	7526	8085	145	150		
		1/17	136	141		90	8683	9673	145	150		
		1/29	146	151		110	13426	13720	170	175		
		1/35	146	151		110	16072	13720	170	175		
		1/43	221	226		135	22540	19600	240	245		
		1/59	220	225		135	22540	19600	240	245		

Notes:
1. The moments of inertia in the table are the values that are converted into the shaft of the servo motor with a gear reducer (and with an electromagnetic brake).
2. Contact your local sales office if the load to motor inertia ratio exceeds the value in the table.
3. The oil lubricated servo motor cannot be used for applications where the servo motor moves. In that case, order a grease lubricated servo motor (special specification). The maximum speed of the grease lubricated servo motor is the same as that of the oil lubricated.
4. Do not mount the servo motor in a way that the servo motor is tilted to the shaft direction or to the shaft rotation direction. Refer to the asterisk 2 of "Annotations for Geared Servo Motor Specifications" on p. 4-86 in this catalog. Servo motors with special specifications may be available to be mounted with other than the shaft horizontal. Refer to "Rotary Servo Motor User's Manual (For MR-J5)" for the available models.
5. The lubricant oil is removed from the gear reducer before shipment, and thus please purchase the required lubricant oil and fill the oil into the gear reducer.
6. The torque characteristics of HK-ST152(4) are equivalent to those of HK-ST172(4)W that are derated by the output ratio of HK-ST172(4)W (1.75 kW) to HK-ST152(4) (1.5 kW). (The rated torque of HK-ST152(4) is 7.2 N•m.) Refer to p. 4-60 in this catalog for the torque characteristics. The moment of inertia and electromagnetic brake specifications of HK-ST152(4) are the same as those of HK-ST172(4)W.

Refer to "Annotations for Geared Servo Motor Specifications" on p. 4-86 in this catalog for details about asterisks 1.

HK-ST Series Geared Servo Motor Specifications

With a gear reducer for general industrial machines, flange mounting: G1

Item	Specifications
Mounting method	Flange mounting
Output shaft rotation direction	Opposite from the servo motor output shaft direction
Backlash (Note 3)	40 minutes to 2° at gear reducer output shaft (Note 2)
Maximum torque (at servo motor shaft) (Note 4)	Three times of the rated torque (Refer to HK-ST series specifications in this catalog for the rated torque.) (Note 5)
Maximum speed (at servo motor shaft)	Grease lubricated: 3000 r/min Oil lubricated: 2000 r/min
IP rating (gear reducer part)	Equivalent to IP44
Gear reducer efficiency (Note 1, 6)	85 % to 94 %

Notes: 1. The gear reducer efficiency varies depending on the reduction ratio and the conditions of use such as an output torque, speed, and temperature. The values in the table are not guaranteed as they are representative values at the rated torque and speed at a temperature of 20 °C.
2. This is a designed value, not guaranteed value.
3. The backlash can be converted: 1 minute = 0.0167˚
4. The torques of the geared servo motors do not increase even when these servo motors are combined with larger capacity servo amplifiers.
5. The torque characteristics of HK-ST152(4) are equivalent to those of HK-ST172(4)W that are derated by the output ratio of HK-ST172(4)W (1.75 kW) to HK-ST152(4) (1.5 kW). (The rated torque of HK-ST152(4) is 7.2 N•m.) Refer to the torque characteristics on this page. The moment of inertia and electromagnetic brake specifications of HK-ST152(4) are the same as those of HK-ST172(4)W.
6. When the ambient temperature is low, the lubricant in the gear reducer may cause the load torque to be higher immediately after the operation starts. Conduct a test run on the servo motors before an actual operation to make sure that no alarm occurs.

HK-ST152/HK-ST1524 Torque Characteristics (Note 1)

: For 3-phase 200 V AC
: For 1-phase 200 V AC

HK-ST152 (Note 2)

Standard torque

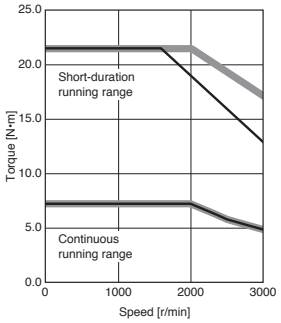

: For 3-phase 400 V AC
: For 3-phase 380 V AC

HK-ST1524

Standard torque

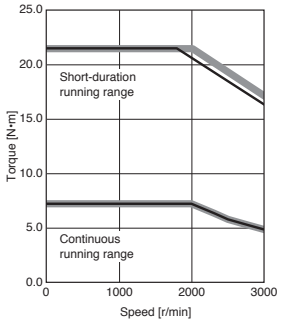

Notes: 1. Torque drops when the power supply voltage is below the specified value.
2. When using a combination of the servo motors of over 750 W and MR-J5-100_ or MR-J5-200_ with a 1-phase power supply, use the servo amplifiers at 75 % or less of the effective load ratio.

HK-ST Series Geared Servo Motor Specifications

With a gear reducer for general industrial machines, foot mounting: G1H

Model HK-ST	Output [kW]	Reduction ratio	Moment of inertia J [× 10^{-4} kg•m^2] (Note 1) Without electro-magnetic brake	Moment of inertia J [× 10^{-4} kg•m^2] (Note 1) With electro-magnetic brake	Permissible load to motor inertia ratio (Note 2) (when converted into the servo motor shaft)	Permissible load for the shaft *1 Q [mm]	Radial [N]	Thrust [N]	Mass [kg] Without electro-magnetic brake	Mass [kg] With electro-magnetic brake	Lubrication method (Note 5)	Mounting direction
52G1H 524G1H	0.5	1/6	6.72	8.97	5 times or less	35	2058	1470	20	22	Grease (filled)	Any direction
		1/11	6.29	8.54		35	2391	1470	20	22		
		1/17	6.17	8.42		35	2832	1470	20	22		
		1/29	6.11	8.36		35	3273	1470	20	22		
		1/35	6.90	9.15		55	5253	2940	28	30		
		1/43	6.86	9.11		55	5253	2940	28	30		
		1/59	6.82	9.07		55	5880	2940	28	30		
102G1H 1024G1H	1.0	1/6	11.9	14.1	5.4 times or less	55	2842	2352	30	32	Grease (filled)	Any direction
		1/11	10.4	12.6		55	3273	2764	30	32		
		1/17	9.95	12.2		55	3646	2940	30	32		
		1/29	9.65	11.9		55	4410	2940	30	32		
		1/35	9.65	11.9		55	5253	2940	30	32		
		1/43	10.9	13.1		70	6047	3920	49	51	Oil (Note 3)	Shaft horizontal (Note 4)
		1/59	16.2	18.4		90	9741	6860	85	87		
152G1H 1524G1H (Note 6)	1.5	1/6	14.6	16.9	5.7 times or less	55	2842	2352	31	33	Grease (filled)	Any direction
		1/11	13.1	15.4		55	3273	2764	31	33		
		1/17	12.7	15.0		55	3646	2940	31	33		
		1/29	13.8	16.1		70	5135	3920	50	52	Oil (Note 3)	Shaft horizontal (Note 4)
		1/35	13.7	16.0		70	6047	3920	50	52		
		1/43	19.0	21.3		90	8555	6860	86	88		
		1/59	18.9	21.2		90	9741	6860	86	88		
202G1H 2024G1H	2.0	1/6	39.6	44.6	5.2 times or less	55	2842	2352	38	43	Grease (filled)	Any direction
		1/11	38.0	43.0		55	3273	2764	38	43		
		1/17	37.7	42.7		55	3646	2940	38	43		
		1/29	44.4	49.4		90	7291	6860	93	98	Oil (Note 3)	Shaft horizontal (Note 4)
		1/35	44.1	49.1		90	8555	6860	93	98		
		1/43	43.9	48.9		90	8555	6860	93	98		
		1/59	43.8	48.8		90	9741	6860	93	98		
352G1H 3524G1H	3.5	1/6	62.1	67.1	5.9 times or less	70	3332	3920	60	64	Oil (Note 3)	Shaft horizontal (Note 4)
		1/11	57.8	62.8		70	3871	3920	60	64		
		1/17	56.5	61.5		70	4420	3920	60	64		
		1/29	61.6	66.6		90	7291	6860	96	105		
		1/35	61.3	66.3		90	8555	6860	96	105		
		1/43	80.0	85.0		90	11662	9800	140	145	Oil	
		1/59	79.0	84.0		90	13132	9800	140	145		
502G1H 5024G1H	5.0	1/6	97.1	102	5.7 times or less	90	5448	5000	99	105	Oil	Shaft horizontal (Note 4)
		1/11	85.1	90.1		90	5488	6292	99	105	Oil (Note 3)	
		1/17	81.1	86.1		90	6468	6860	99	105		
		1/29	112	117		110	13426	13720	180	185	Oil	
		1/35	111	116		110	16072	13720	180	185		
		1/43	110	115		110	16072	13720	180	185		
		1/59	109	114		110	16072	13720	180	185		
702G1H 7024G1H	7.0	1/6	131	136	5.8 times or less	90	7526	5000	105	110	Oil	Shaft horizontal (Note 4)
		1/11	144	149		90	7526	8085	145	150		
		1/17	136	141		90	8683	9673	145	150		
		1/29	146	151		110	13426	13720	185	190		
		1/35	146	151		110	16072	13720	185	190		
		1/43	221	226		135	22540	19600	255	260		
		1/59	220	225		135	22540	19600	255	260		

Notes:
1. The moments of inertia in the table are the values that are converted into the shaft of the servo motor with a gear reducer (and with an electromagnetic brake).
2. Contact your local sales office if the load to motor inertia ratio exceeds the value in the table.
3. The oil lubricated servo motor cannot be used for applications where the servo motor moves. In that case, order a grease lubricated servo motor (special specification). The maximum speed of the grease lubricated servo motor is the same as that of the oil lubricated.
4. Do not mount the servo motor in a way that the servo motor is tilted to the shaft direction or to the shaft rotation direction. Refer to the asterisk 2 of "Annotations for Geared Servo Motor Specifications" on p. 4-86 in this catalog. Servo motors with special specifications may be available to be mounted with other than the shaft horizontal. Refer to "Rotary Servo Motor User's Manual (For MR-J5)" for the available models.
5. The lubricant oil is removed from the gear reducer before shipment, and thus please purchase the required lubricant oil and fill the oil into the gear reducer.
6. The torque characteristics of HK-ST152(4) are equivalent to those of HK-ST172(4)W that are derated by the output ratio of HK-ST172(4)W (1.75 kW) to HK-ST152(4) (1.5 kW). (The rated torque of HK-ST152(4) is 7.2 N•m.) Refer to p. 4-60 in this catalog for the torque characteristics. The moment of inertia and electromagnetic brake specifications of HK-ST152(4) are the same as those of HK-ST172(4)W.

Refer to "Annotations for Geared Servo Motor Specifications" on p. 4-86 in this catalog for details about asterisks 1.

HK-ST Series Geared Servo Motor Specifications

With a gear reducer for general industrial machines, foot mounting: G1H

Item	Specifications
Mounting method	Foot mounting
Output shaft rotation direction	Opposite from the servo motor output shaft direction
Backlash (Note 3)	40 minutes to 2° at gear reducer output shaft (Note 2)
Maximum torque (at servo motor shaft) (Note 4)	Three times of the rated torque (Refer to HK-ST series specifications in this catalog for the rated torque.) (Note 5)
Maximum speed (at servo motor shaft)	Grease lubricated: 3000 r/min Oil lubricated: 2000 r/min
IP rating (gear reducer part)	Equivalent to IP44
Gear reducer efficiency (Note 1, 6)	85 % to 94 %

Notes:
1. The gear reducer efficiency varies depending on the reduction ratio and the conditions of use such as an output torque, speed, and temperature. The values in the table are not guaranteed as they are representative values at the rated torque and speed at a temperature of 20 °C.
2. This is a designed value, not guaranteed value.
3. The backlash can be converted: 1 minute = 0.0167°
4. The torques of the geared servo motors do not increase even when these servo motors are combined with larger capacity servo amplifiers.
5. The torque characteristics of HK-ST152(4) are equivalent to those of HK-ST172(4)W that are derated by the output ratio of HK-ST172(4)W (1.75 kW) to HK-ST152(4) (1.5 kW). (The rated torque of HK-ST152(4) is 7.2 N•m.) Refer to p. 4-60 in this catalog for the torque characteristics. The moment of inertia and electromagnetic brake specifications of HK-ST152(4) are the same as those of HK-ST172(4)W.
6. When the ambient temperature is low, the lubricant in the gear reducer may cause the load torque to be higher immediately after the operation starts. Conduct a test run on the servo motors before an actual operation to make sure that no alarm occurs.

HK-ST Series Geared Servo Motor Specifications

With a flange-output type gear reducer for high precision applications, flange mounting: G5

Model HK-ST	Output [kW]	Reduction ratio	Moment of inertia J [× 10^{-4} kg•m^2] (Note 1)		Permissible load to motor inertia ratio (Note 2) (when converted into the servo motor shaft)	Permissible load for the shaft *1			Mass [kg]		Lubrication method	Mounting direction
			Without electro-magnetic brake	With electro-magnetic brake		L [mm]	Radial [N]	Thrust [N]	Without electro-magnetic brake	With electro-magnetic brake		
52G5 524G5	0.5	1/5	6.55	8.80	12.4 times or less	32	416	1465	7.1	8.8	Grease (filled)	Any direction
		1/11	6.46	8.71		32	527	1856	7.5	9.2		
		1/21	8.80	11.1		57	1094	4359	11	13		
		1/33	8.60	10.9		57	1252	4992	11	13		
		1/45	8.60	10.9		57	1374	5478	11	13		
102G5 1024G5	1.0	1/5	9.30	11.6	13.5 times or less	32	416	1465	8.0	9.7		
		1/11	12.0	14.2		57	901	3590	12	14		
		1/21	11.6	13.8		57	1094	4359	12	14		
		1/33	13.4	15.6		62	2929	10130	22	23		
		1/45	13.3	15.5		62	3215	11117	22	23		
152G5 1524G5 (Note 3)	1.5	1/5	12.1	14.4	14.1 times or less	32	416	1465	9.0	11		
		1/11	14.7	17.0		57	901	3590	13	15		
		1/21	17.1	19.4		62	2558	8845	23	24		
		1/33	16.1	18.4		62	2929	10130	23	24		
		1/45	16.0	18.3		62	3215	11117	23	24		
202G5 2024G5	2.0	1/5	41.0	46.0	12.9 times or less	57	711	2834	20	25		
		1/11	40.8	45.8		57	901	3590	20	25		
		1/21	42.8	47.8		62	2558	8845	30	35		
		1/33	41.8	46.8		62	2929	10130	30	35		
		1/45	41.8	46.8		62	3215	11117	30	35		
352G5 3524G5	3.5	1/5	58.2	63.2	14.7 times or less	57	711	2834	23	28		
		1/11	61.7	66.7		62	2107	7285	33	38		
		1/21	60.0	65.0		62	2558	8845	33	38		
502G5 5024G5	5.0	1/5	80.9	85.9	14.1 times or less	62	1663	5751	34	39		
		1/11	78.9	83.9		62	2107	7285	36	41		
702G5 7024G5	7.0	1/5	115	120	14.4 times or less	62	1663	5751	40	45		

Item	Specifications
Mounting method	Flange mounting
Output shaft rotation direction	Same as the servo motor output shaft direction
Backlash (Note 5)	3 minutes or less at gear reducer output shaft
Maximum torque (at servo motor shaft) (Note 6)	Three times of the rated torque (Refer to HK-ST series specifications in this catalog for the rated torque.) (Note 3)
Maximum speed (at servo motor shaft)	3000 r/min
IP rating (gear reducer part)	Equivalent to IP44
Gear reducer efficiency (Note 4, 7)	77 % to 92 %

Notes: 1. The moments of inertia in the table are the values that are converted into the shaft of the servo motor with a gear reducer (and with an electromagnetic brake).
2. Contact your local sales office if the load to motor inertia ratio exceeds the value in the table.
3. The torque characteristics of HK-ST152(4) are equivalent to those of HK-ST172(4)W that are derated by the output ratio of HK-ST172(4)W (1.75 kW) to HK-ST152(4) (1.5 kW). (The rated torque of HK-ST152(4) is 7.2 N•m.) Refer to p. 4-60 in this catalog for the torque characteristics. The moment of inertia and electromagnetic brake specifications of HK-ST152(4) are the same as those of HK-ST172(4)W.
4. The gear reducer efficiency varies depending on the reduction ratio and the conditions of use such as an output torque, speed, and temperature. The values in the table are not guaranteed as they are representative values at the rated torque and speed at a temperature of 20 °C.
5. The backlash can be converted: 1 minute = 0.0167°
6. The torques of the geared servo motors do not increase even when these servo motors are combined with larger capacity servo amplifiers.
7. When the ambient temperature is low, the lubricant in the gear reducer may cause the load torque to be higher immediately after the operation starts. Conduct a test run on the servo motors before an actual operation to make sure that no alarm occurs.

Refer to "Annotations for Geared Servo Motor Specifications" on p. 4-86 in this catalog for details about asterisks 1.

HK-ST Series Geared Servo Motor Specifications

With a shaft-output type gear reducer for high precision applications, flange mounting: G7

Model HK-ST	Output [kW]	Reduction ratio	Moment of inertia J [× 10^{-4} kg•m^2] (Note 1)		Permissible load to motor inertia ratio (Note 2) (when converted into the servo motor shaft)	Permissible load for the shaft *1			Mass [kg]		Lubrication method	Mounting direction
			Without electro-magnetic brake	With electro-magnetic brake		Q [mm]	Radial [N]	Thrust [N]	Without electro-magnetic brake	With electro-magnetic brake		
52G7 524G7	0.5	1/5	6.59	8.84	12.4 times or less	32	416	1465	7.5	9.2	Grease (filled)	Any direction
		1/11	6.46	8.71		32	527	1856	7.7	9.4		
		1/21	8.80	11.1		57	1094	4359	13	14		
		1/33	8.60	10.9		57	1252	4992	13	14		
		1/45	8.60	10.9		57	1374	5478	13	14		
102G7 1024G7	1.0	1/5	9.34	11.6	13.5 times or less	32	416	1465	8.4	11		
		1/11	12.1	14.3		57	901	3590	14	15		
		1/21	11.6	13.8		57	1094	4359	14	15		
		1/33	13.4	15.6		62	2929	10130	25	26		
		1/45	13.4	15.6		62	3215	11117	25	26		
152G7 1524G7 (Note 3)	1.5	1/5	12.1	14.4	14.1 times or less	32	416	1465	9.4	11		
		1/11	14.8	17.1		57	901	3590	15	16		
		1/21	17.1	19.4		62	2558	8845	26	27		
		1/33	16.1	18.4		62	2929	10130	26	27		
		1/45	16.1	18.4		62	3215	11117	26	27		
202G7 2024G7	2.0	1/5	41.3	46.3	12.9 times or less	57	711	2834	21	26		
		1/11	40.9	45.9		57	901	3590	22	27		
		1/21	42.9	47.9		62	2558	8845	33	38		
		1/33	41.8	46.8		62	2929	10130	33	38		
		1/45	41.8	46.8		62	3215	11117	33	38		
352G7 3524G7	3.5	1/5	58.5	63.5	14.7 times or less	57	711	2834	24	29		
		1/11	62.0	67.0		62	2107	7285	36	41		
		1/21	60.1	65.1		62	2558	8845	36	41		
502G7 5024G7	5.0	1/5	82.3	87.3	14.1 times or less	62	1663	5751	37	42		
		1/11	79.2	84.2		62	2107	7285	39	44		
702G7 7024G7	7.0	1/5	117	122	14.4 times or less	62	1663	5751	43	48		

Item	Specifications
Mounting method	Flange mounting
Output shaft rotation direction	Same as the servo motor output shaft direction
Backlash (Note 5)	3 minutes or less at gear reducer output shaft
Maximum torque (at servo motor shaft) (Note 6)	Three times of the rated torque (Refer to HK-ST series specifications in this catalog for the rated torque.) (Note 3)
Maximum speed (at servo motor shaft)	3000 r/min
IP rating (gear reducer part)	Equivalent to IP44
Gear reducer efficiency (Note 4, 7)	77 % to 92 %

Notes: 1. The moments of inertia in the table are the values that are converted into the shaft of the servo motor with a gear reducer (and with an electromagnetic brake).
2. Contact your local sales office if the load to motor inertia ratio exceeds the value in the table.
3. The torque characteristics of HK-ST152(4) are equivalent to those of HK-ST172(4)W that are derated by the output ratio of HK-ST172(4)W (1.75 kW) to HK-ST152(4) (1.5 kW). (The rated torque of HK-ST152(4) is 7.2 N•m.) Refer to p. 4-60 in this catalog for the torque characteristics. The moment of inertia and electromagnetic brake specifications of HK-ST152(4) are the same as those of HK-ST172(4)W.
4. The gear reducer efficiency varies depending on the reduction ratio and the conditions of use such as an output torque, speed, and temperature. The values in the table are not guaranteed as they are representative values at the rated torque and speed at a temperature of 20 °C.
5. The backlash can be converted: 1 minute = 0.0167˚
6. The torques of the geared servo motors do not increase even when these servo motors are combined with larger capacity servo amplifiers.
7. When the ambient temperature is low, the lubricant in the gear reducer may cause the load torque to be higher immediately after the operation starts. Conduct a test run on the servo motors before an actual operation to make sure that no alarm occurs.

Refer to "Annotations for Geared Servo Motor Specifications" on p. 4-86 in this catalog for details about asterisks 1.

HK-ST Series Geared Servo Motor Dimensions (Note 1, 5)

With a gear reducer for general industrial machines, flange mounting

HK-ST_G1 (Note 6)

The drawing is schematic only. The actual shapes of the servo motors and the location of the mounting screws and the oil cap may differ from the drawing.

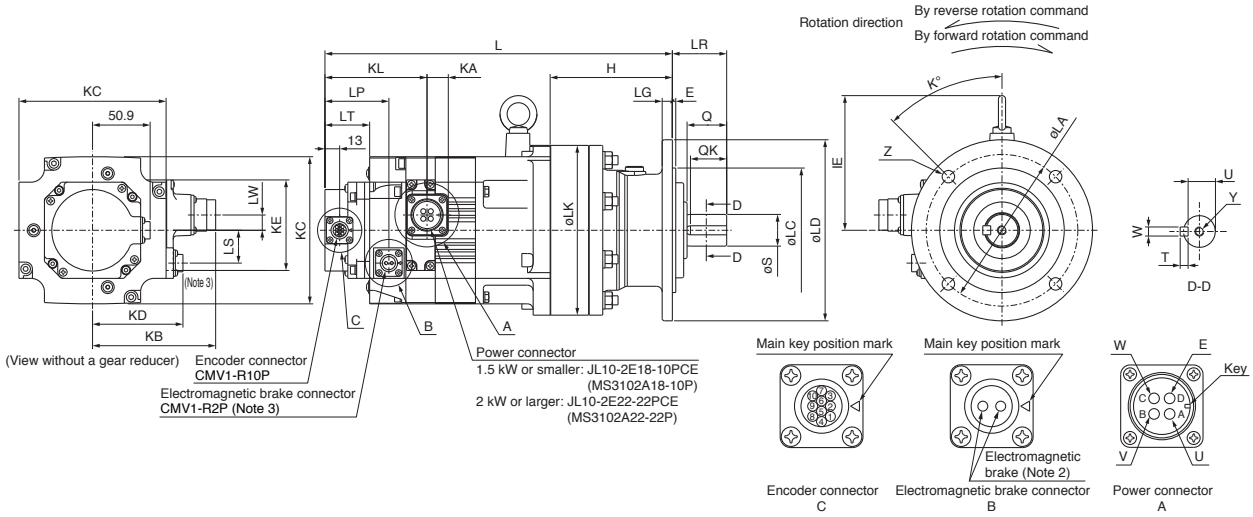

[Unit: mm]

Model HK-ST	Reduction ratio	Variable dimensions (Note 4) L	LA	LC	LD	LG	LK	LR	IE	KL	KA	LP	LT	LW	LS	KE	Z	K	E	H	KB	KD	KC	Q	QK	S	T	U	W	Y
52(B)G1 524(B)G1	1/6	272.5 (307)	134	110 $^{0.036}_{0.090}$	160	9	150	48	119	55.7 (90.2)	18.8	(56.5)	35.5 (39.5)	13.5	(29)	80	4× φ11	45	3	108	108.8	(79.9)	130	35	32	28 $^{0}_{0.013}$	7	24	8	M8×20
	1/11																													
	1/17																													
	1/29																													
	1/35	265 (299.5)	180	140 $^{0.043}_{0.106}$	210	13	204	69	132	55.7 (90.2)	18.8	(56.5)	35.5 (39.5)	13.5	(29)	80	6× φ11	30	4	117	108.8	(79.9)	130	55	50	38 $^{0}_{0.016}$	8	33	10	
	1/43																													
	1/59																													
102(B)G1 1024(B)G1	1/6	276 (310.5)	180	140 $^{0.043}_{0.106}$	210	13	204	69	132	55.7 (90.2)	18.8	(56.5)	35.5 (39.5)	13.5	(29)	80	6× φ11	30	4	117	108.8	(79.9)	130	55	50	38 $^{0}_{0.016}$	8	33	10	M8×20
	1/11																													
	1/17																													
	1/29																													
	1/35																													
	1/43	321.5 (356)	230	200 $^{0.050}_{0.122}$	260	15	230	76	145	55.7 (90.2)	18.8	(56.5)	35.5 (39.5)	13.5	(29)	80	6× φ11	60	4	164	108.8	(79.9)	130	70	56	50 $^{0}_{0.016}$	9	44.5	14	M10×18
	1/59	379 (413.5)	310	270 $^{0.056}_{0.137}$	340	20	300	89	192	55.7 (90.2)	18.8	(56.5)	35.5 (39.5)	13.5	(29)	80	6× φ11	60	4	219	108.8	(79.9)	130	90	80	60 $^{0}_{0.019}$	11	53	18	
152(B)G1 1524(B)G1	1/6	287 (321.5)	180	140 $^{0.043}_{0.106}$	210	13	204	69	132	55.7 (90.2)	18.8	(56.5)	35.5 (39.5)	13.5	(29)	80	6× φ11	30	4	117	108.8	(79.9)	130	55	50	38 $^{0}_{0.016}$	8	33	10	M8×20
	1/11																													
	1/17																													
	1/29	332.5 (367)	230	200 $^{0.050}_{0.122}$	260	15	230	76	145	55.7 (90.2)	18.8	(56.5)	35.5 (39.5)	13.5	(29)	80	6× φ11	60	4	164	108.8	(79.9)	130	70	56	50 $^{0}_{0.016}$	9	44.5	14	M10×18
	1/35																													
	1/43	390 (424.5)	310	270 $^{0.056}_{0.137}$	340	20	300	89	192	55.7 (90.2)	18.8	(56.5)	35.5 (39.5)	13.5	(29)	80	6× φ11	60	4	219	108.8	(79.9)	130	90	80	60 $^{0}_{0.019}$	11	53	18	
	1/59																													
202(B)G1 2024(B)G1	1/6	306 (355.5)	180	140 $^{0.043}_{0.106}$	210	13	204	69	142	57.8 (107.3)	22.6	(62.5)	35.5 (42.5)	0	(44)	80	6× φ11	30	4	117	140.8	(96.9)	176	55	50	38 $^{0}_{0.016}$	8	33	10	M8×20
	1/11																													
	1/17																													
	1/29	403 (452.5)	310	270 $^{0.056}_{0.137}$	340	20	300	89	181	57.8 (107.3)	22.6	(62.5)	35.5 (42.5)	0	(44)	80	6× φ11	60	4	219	140.8	(96.9)	176	90	80	60 $^{0}_{0.019}$	11	53	18	M10×18
	1/35																													
	1/43																													
	1/59																													
352(B)G1 3524(B)G1	1/6	368.5 (418)	230	200 $^{0.056}_{0.137}$	260	15	230	76	145	57.8 (107.3)	22.6	(62.5)	35.5 (42.5)	0	(44)	80	6× φ11	60	4	164	140.8	(96.9)	176	70	56	50 $^{0}_{0.016}$	9	44.5	14	M10×18
	1/11																													
	1/17																													
	1/29	423 (472.5)	310	270 $^{0.056}_{0.137}$	340	20	300	89	181	57.8 (107.3)	22.6	(62.5)	35.5 (42.5)	0	(44)	80	6× φ11	60	4	219	140.8	(96.9)	176	90	80	60 $^{0}_{0.019}$	11	53	18	
	1/35																													
	1/43	462.5 (512)	360	316 $^{0.062}_{0.151}$	400	22	340	94	181	57.8 (107.3)	22.6	(62.5)	35.5 (42.5)	0	(44)	80	8× φ14	22.5	5	258	140.8	(96.9)	176	90	80	70 $^{0}_{0.019}$	12	62.5	20	M12×24
	1/59																													
502(B)G1 5024(B)G1	1/6	443 (492.5)	310	270 $^{0.056}_{0.137}$	340	20	300	89	181	57.8 (107.3)	22.6	(62.5)	35.5 (42.5)	0	(44)	80	6× φ11	60	4	219	140.8	(96.9)	176	90	80	60 $^{0}_{0.019}$	11	53	18	M10×18
	1/11																													
	1/17																													
	1/29	506.5 (556)	390	345 $^{0.062}_{0.151}$	430	22	370	110	176	57.8 (107.3)	22.6	(62.5)	35.5 (42.5)	0	(44)	80	8× φ18	22.5	5	279	140.8	(96.9)	176	110	100	80 $^{0}_{0.019}$	14	71	22	M12×24
	1/35																													
	1/43																													
	1/59																													
702(B)G1 7024(B)G1	1/6	483 (532.5)	310	270 $^{0.056}_{0.137}$	340	20	300	89	181	57.8 (107.3)	22.6	(62.5)	35.5 (42.5)	0	(44)	80	6× φ11	60	4	219	140.8	(96.9)	176	90	80	60 $^{0}_{0.019}$	11	53	18	M10×18
	1/11	522.5 (572)	360	316 $^{0.062}_{0.151}$	400	22	340	94	181	57.8 (107.3)	22.6	(62.5)	35.5 (42.5)	0	(44)	80	8× φ14	22.5	5	258	140.8	(96.9)	176	90	80	70 $^{0}_{0.019}$	12	62.5	20	M12×24
	1/17																													
	1/29	546.5 (596)	390	345 $^{0.062}_{0.151}$	430	22	370	110	176	57.8 (107.3)	22.6	(62.5)	35.5 (42.5)	0	(44)	80	8× φ18	22.5	5	279	140.8	(96.9)	176	110	100	80 $^{0}_{0.019}$	14	71	22	
	1/35																													
	1/43	602.5 (652)	450	400 $^{0.062}_{0.151}$	490	30	430	145	210	57.8 (107.3)	22.6	(62.5)	35.5 (42.5)	0	(44)	80	12× φ18	15	6	320	140.8	(96.9)	176	135	125	95 $^{0}_{0.022}$	14	86	25	M20×34
	1/59																													

Notes:
1. The actual dimensions may be up to 3 mm larger than those shown in the drawing because of shifting and variance of parts that occur during the assembly and manufacture of the rotary servo motors. The dimensions and tolerances shown are applicable at a temperature of 20 °C and may vary depending on the ambient temperature. Design the machine to allow for sufficient space.
2. The electromagnetic brake terminals do not have polarity.
3. Only for the models with an electromagnetic brake.
4. The dimensions in brackets are for the models with an electromagnetic brake.
5. The lubricant oil is removed from the gear reducer before shipment, and thus please purchase the required lubricant oil and fill the oil into the gear reducer.
6. This geared servo motor has a keyed shaft (with a key).

HK-ST Series Geared Servo Motor Dimensions (Note 1, 5)

With a gear reducer for general industrial machines, foot mounting

HK-ST_G1H (Note 6)

The drawing is schematic only. The actual shapes of the servo motors and the location of the mounting screws and the oil cap may differ from the drawing.

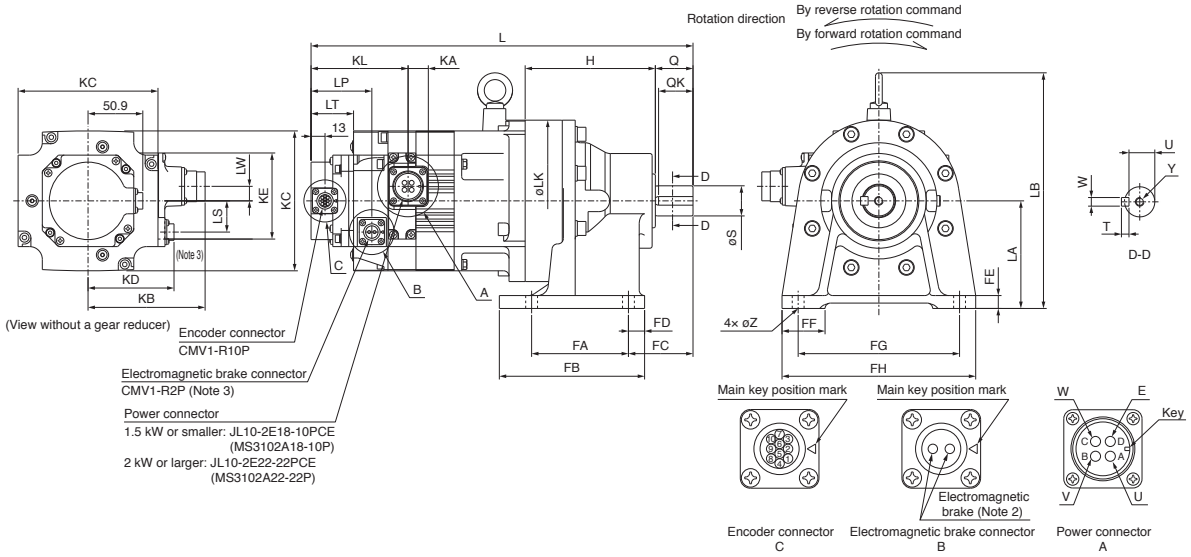

[Unit: mm]

Model HK-ST	Reduction ratio	Variable dimensions (Note 4) L	LA	LB	LK	LS	LT	LP	LW	H	KL	KA	KB	KD	KC	KE	Z	FA	FB	FC	FD	FE	FF	FG	FH	Q	QK	S	T	U	W	Y
52(B)G1H 524(B)G1H	1/6	320.5 (355)	100	219	150	(29)	35.5 (39.5)	(56.5)	13.5	121	55.7 (90.2)	18.8	108.8	(79.9)	130	80	11	90	135	60	15	12	40	150	180	35	32	$28^{0}_{-0.013}$	7	24	8	M8×20
	1/11																															
	1/17																															
	1/29																															
	1/35	334 (368.5)	120	252	204	(29)	35.5 (39.5)	(56.5)	13.5	131	55.7 (90.2)	18.8	108.8	(79.9)	130	80	14	115	155	82	20	15	55	190	230	55	50	$38^{0}_{-0.016}$	8	33	10	
	1/43																															
	1/59																															
102(B)G1H 1024(B)G1H	1/6	345 (379.5)	120	252	204	(29)	35.5 (39.5)	(56.5)	13.5	131	55.7 (90.2)	18.8	108.8	(79.9)	130	80	14	115	155	82	20	15	55	190	230	55	50	$38^{0}_{-0.016}$	8	33	10	M8×20
	1/11																															
	1/17																															
	1/29																															
	1/35																															
	1/43	397.5 (432)	150	295	230	(29)	35.5 (39.5)	(56.5)	13.5	170	55.7 (90.2)	18.8	108.8	(79.9)	130	80	18	145	195	100	25	22	65	290	330	70	56	$50^{0}_{-0.016}$	9	44.5	14	M10×18
	1/59	468 (502.5)	160	352	300	(29)	35.5 (39.5)	(56.5)	13.5	218	55.7 (90.2)	18.8	108.8	(79.9)	130	80	18	150	238	139	44	25	75	370	410	90	80	$60^{0}_{-0.019}$	11	53	18	
152(B)G1H 1524(B)G1H	1/6	356 (390.5)	120	252	204	(29)	35.5 (39.5)	(56.5)	13.5	131	55.7 (90.2)	18.8	108.8	(79.9)	130	80	14	115	155	82	20	15	55	190	230	55	50	$38^{0}_{-0.016}$	8	33	10	M8×20
	1/11																															
	1/17																															
	1/29	408.5 (443)	150	295	230	(29)	35.5 (39.5)	(56.5)	13.5	170	55.7 (90.2)	18.8	108.8	(79.9)	130	80	18	145	195	100	25	22	65	290	330	70	56	$50^{0}_{-0.016}$	9	44.5	14	M10×18
	1/35																															
	1/43	479 (513.5)	160	352	300	(29)	35.5 (39.5)	(56.5)	13.5	218	55.7 (90.2)	18.8	108.8	(79.9)	130	80	18	150	238	139	44	25	75	370	410	90	80	$60^{0}_{-0.019}$	11	53	18	
	1/59																															
202(B)G1H 2024(B)G1H	1/6	375 (424.5)	120	262	204	(44)	35.5 (42.5)	(62.5)	0	131	57.8 (107.3)	22.6	140.8	(96.9)	176	80	14	115	155	82	20	15	55	190	230	55	50	$38^{0}_{-0.016}$	8	33	10	M8×20
	1/11																															
	1/17																															
	1/29	492 (541.5)	160	341	300	(44)	35.5 (42.5)	(62.5)	0	218	57.8 (107.3)	22.6	140.8	(96.9)	176	80	18	150	238	139	44	25	75	370	410	90	80	$60^{0}_{-0.019}$	11	53	18	M10×18
	1/35																															
	1/43																															
	1/59																															
352(B)G1H 3524(B)G1H	1/6	444.5 (494)	150	295	230	(44)	35.5 (42.5)	(62.5)	0	170	57.8 (107.3)	22.6	140.8	(96.9)	176	80	18	145	195	100	25	22	65	290	330	70	56	$50^{0}_{-0.016}$	9	44.5	14	M10×18
	1/11																															
	1/17																															
	1/29	512 (561.5)	160	341	300	(44)	35.5 (42.5)	(62.5)	0	218	57.8 (107.3)	22.6	140.8	(96.9)	176	80	18	150	238	139	44	25	75	370	410	90	80	$60^{0}_{-0.019}$	11	53	18	
	1/35																															
	1/43	556.5 (606)	200	381	340	(44)	35.5 (42.5)	(62.5)	0	262	57.8 (107.3)	22.6	140.8	(96.9)	176	80	22	275	335	125	30	30	80	380	430	90	80	$70^{0}_{-0.019}$	12	62.5	20	M12×24
	1/59																															
502(B)G1H 5024(B)G1H	1/6	532 (581.5)	160	341	300	(44)	35.5 (42.5)	(62.5)	0	218	57.8 (107.3)	22.6	140.8	(96.9)	176	80	18	150	238	139	44	25	75	370	410	90	80	$60^{0}_{-0.019}$	11	53	18	M10×18
	1/11																															
	1/17																															
	1/29	616.5 (666)	220	405	370	(44)	35.5 (42.5)	(62.5)	0	279	57.8 (107.3)	22.6	140.8	(96.9)	176	80	22	320	380	145	30	30	85	420	470	110	100	$80^{0}_{-0.019}$	14	71	22	M12×24
	1/35																															
	1/43																															
	1/59																															
702(B)G1H 7024(B)G1H	1/6	572 (621.5)	160	341	300	(44)	35.5 (42.5)	(62.5)	0	218	57.8 (107.3)	22.6	140.8	(96.9)	176	80	18	150	238	139	44	25	75	370	410	90	80	$60^{0}_{-0.019}$	11	53	18	M10×18
	1/11	616.5 (666)	200	381	340	(44)	35.5 (42.5)	(62.5)	0	262	57.8 (107.3)	22.6	140.8	(96.9)	176	80	22	275	335	125	30	30	80	380	430	90	80	$70^{0}_{-0.019}$	12	62.5	20	M12×24
	1/17																															
	1/29	656.5 (706)	220	405	370	(44)	35.5 (42.5)	(62.5)	0	279	57.8 (107.3)	22.6	140.8	(96.9)	176	80	22	320	380	145	30	30	85	420	470	110	100	$80^{0}_{-0.019}$	14	71	22	
	1/35																															
	1/43	747.5 (797)	250	465	430	(44)	35.5 (42.5)	(62.5)	0	330	57.8 (107.3)	22.6	140.8	(96.9)	176	80	26	380	440	170	30	35	90	480	530	135	125	$95^{0}_{-0.022}$	14	86	25	M20×34
	1/59																															

Notes:
1. The actual dimensions may be up to 3 mm larger than those shown in the drawing because of shifting and variance of parts that occur during the assembly and manufacture of the rotary servo motors. The dimensions and tolerances shown are applicable at a temperature of 20 °C and may vary depending on the ambient temperature. Design the machine to allow for sufficient space.
2. The electromagnetic brake terminals do not have polarity.
3. Only for the models with an electromagnetic brake.
4. The dimensions in brackets are for the models with an electromagnetic brake.
5. The lubricant oil is removed from the gear reducer before shipment, and thus please purchase the required lubricant oil and fill the oil into the gear reducer.
6. This geared servo motor has a keyed shaft (with a key).

HK-ST Series Geared Servo Motor Dimensions (Note 1)

With a flange-output type gear reducer for high precision applications, flange mounting

HK-ST_G5

The drawing is schematic only. The actual shapes of the servo motors and the location of the mounting screws may differ from the drawing.

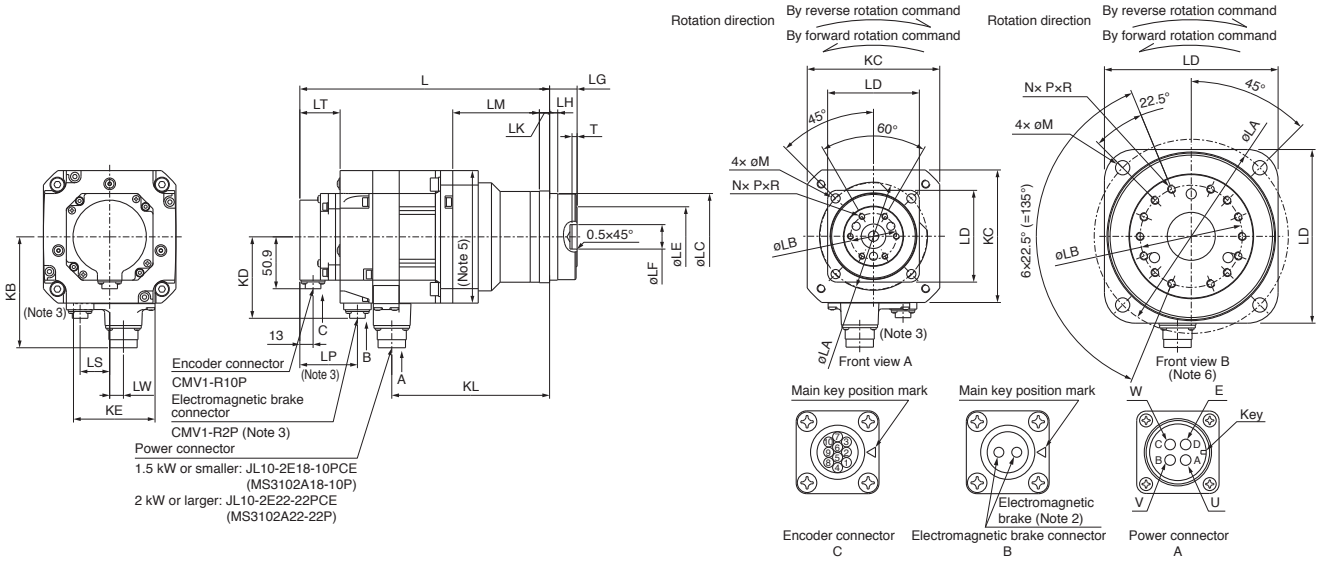

[Unit: mm]

Model HK-ST	Reduction ratio	Variable dimensions (Note 4) L	LA	LB	LC	LD	LE	LF	LG	LH	LK	LM	LT	KL	LP	LW	LS	T	N	P	R	M	KB	KD	KC	KE	Front view
52(B)G5 524(B)G5	1/5	210.5 (245)	105	45	85 $^{0}_{-0.035}$	90	59	24 $^{+0.021}_{0}$	27 $^{+0.4}_{+0.5}$	8	10	85	35.5 (39.5)	154.8	(56.5)	13.5	(29)	5	6	M6	10	9	108.8	(79.9)	130	80	A
	1/11																										
	1/21	222.5 (257)	135	60	115 $^{0}_{-0.035}$	120	84	32 $^{+0.025}_{0}$	35 $^{+0.4}_{+0.5}$	13	13	94	35.5 (39.5)	166.8	(56.5)	13.5	(29)	5	6	M8	12	11	108.8	(79.9)	130	80	A
	1/33																										
	1/45																										
102(B)G5 1024(B)G5	1/5	221.5 (256)	105	45	85 $^{0}_{-0.035}$	90	59	24 $^{+0.021}_{0}$	27 $^{+0.4}_{+0.5}$	8	10	85	35.5 (39.5)	165.8	(56.5)	13.5	(29)	5	6	M6	10	9	108.8	(79.9)	130	80	A
	1/11	233.5 (268)	135	60	115 $^{0}_{-0.035}$	120	84	32 $^{+0.025}_{0}$	35 $^{+0.4}_{+0.5}$	13	13	94	35.5 (39.5)	177.8	(56.5)	13.5	(29)	5	6	M8	12	11	108.8	(79.9)	130	80	A
	1/21																										
	1/33	249.5 (284)	190	100	165 $^{0}_{-0.063}$	170	122	47 $^{+0.025}_{0}$	53 $^{+0.5}_{+0.8}$	13	16	107	35.5 (39.5)	193.8	(56.5)	13.5	(29)	7	14	M8	12	14	108.8	(79.9)	130	80	B
	1/45																										
152(B)G5 1524(B)G5	1/5	232.5 (267)	105	45	85 $^{0}_{-0.035}$	90	59	24 $^{+0.021}_{0}$	27 $^{+0.4}_{+0.5}$	8	10	85	35.5 (39.5)	176.8	(56.5)	13.5	(29)	5	6	M6	10	9	108.8	(79.9)	130	80	A
	1/11	244.5 (279)	135	60	115 $^{0}_{-0.035}$	120	84	32 $^{+0.025}_{0}$	35 $^{+0.4}_{+0.5}$	13	13	94	35.5 (39.5)	188.8	(56.5)	13.5	(29)	5	6	M8	12	11	108.8	(79.9)	130	80	A
	1/21																										
	1/33	260.5 (295)	190	100	165 $^{0}_{-0.063}$	170	122	47 $^{+0.025}_{0}$	53 $^{+0.5}_{+0.8}$	13	16	107	35.5 (39.5)	204.8	(56.5)	13.5	(29)	7	14	M8	12	14	108.8	(79.9)	130	80	B
	1/45																										
202(B)G5 2024(B)G5	1/5	267.5 (317)	135	60	115 $^{0}_{-0.035}$	120	84	32 $^{+0.025}_{0}$	35 $^{+0.4}_{+0.5}$	13	13	116	35.5 (42.5)	209.7	(62.5)	0	(44)	5	6	M8	12	11	140.8	(96.9)	176	80	A
	1/11																										
	1/21	287.5 (337)	190	100	165 $^{0}_{-0.063}$	170	122	47 $^{+0.025}_{0}$	53 $^{+0.5}_{+0.8}$	13	16	133	35.5 (42.5)	229.7	(62.5)	0	(44)	7	14	M8	12	14	140.8	(96.9)	176	80	B
	1/33																										
	1/45																										
352(B)G5 3524(B)G5	1/5	287.5 (337)	135	60	115 $^{0}_{-0.035}$	120	84	32 $^{+0.025}_{0}$	35 $^{+0.4}_{+0.5}$	13	13	116	35.5 (42.5)	229.7	(62.5)	0	(44)	5	6	M8	12	11	140.8	(96.9)	176	80	A
	1/11	307.5 (357)	190	100	165 $^{0}_{-0.063}$	170	122	47 $^{+0.025}_{0}$	53 $^{+0.5}_{+0.8}$	13	16	133	35.5 (42.5)	249.7	(62.5)	0	(44)	7	14	M8	12	14	140.8	(96.9)	176	80	B
	1/21																										
502(B)G5 5024(B)G5	1/5	327.5 (377)	190	100	165 $^{0}_{-0.063}$	170	122	47 $^{+0.025}_{0}$	53 $^{+0.5}_{+0.8}$	13	16	133	35.5 (42.5)	269.7	(62.5)	0	(44)	7	14	M8	12	14	140.8	(96.9)	176	80	B
	1/11																										
702(B)G5 7024(B)G5	1/5	367.5 (417)	190	100	165 $^{0}_{-0.063}$	170	122	47 $^{+0.025}_{0}$	53 $^{+0.5}_{+0.8}$	13	16	133	35.5 (42.5)	309.7	(62.5)	0	(44)	7	14	M8	12	14	140.8	(96.9)	176	80	B

Notes:
1. The actual dimensions may be up to 3 mm larger than those shown in the drawing because of shifting and variance of parts that occur during the assembly and manufacture of the rotary servo motors. The dimensions and tolerances shown are applicable at a temperature of 20 °C and may vary depending on the ambient temperature. Design the machine to allow for sufficient space.
2. The electromagnetic brake terminals do not have polarity.
3. Only for the models with an electromagnetic brake.
4. The dimensions in brackets are for the models with an electromagnetic brake.
5. HK-ST202(B)G5 to HK-ST702(B)G5 and HK-ST2024(B)G5 to HK-ST7024(B)G5 have the maximum dimensions of 180 mm × 180 mm in this part.
6. For the front view B, the screws are not placed at equal intervals.

HK-ST Series Geared Servo Motor Dimensions (Note 1, 5)

With a shaft-output type gear reducer for high precision applications, flange mounting

HK-ST_G7 (Note 7)

The drawing is schematic only. The actual shapes of the servo motors and the location of the mounting screws may differ from the drawing.

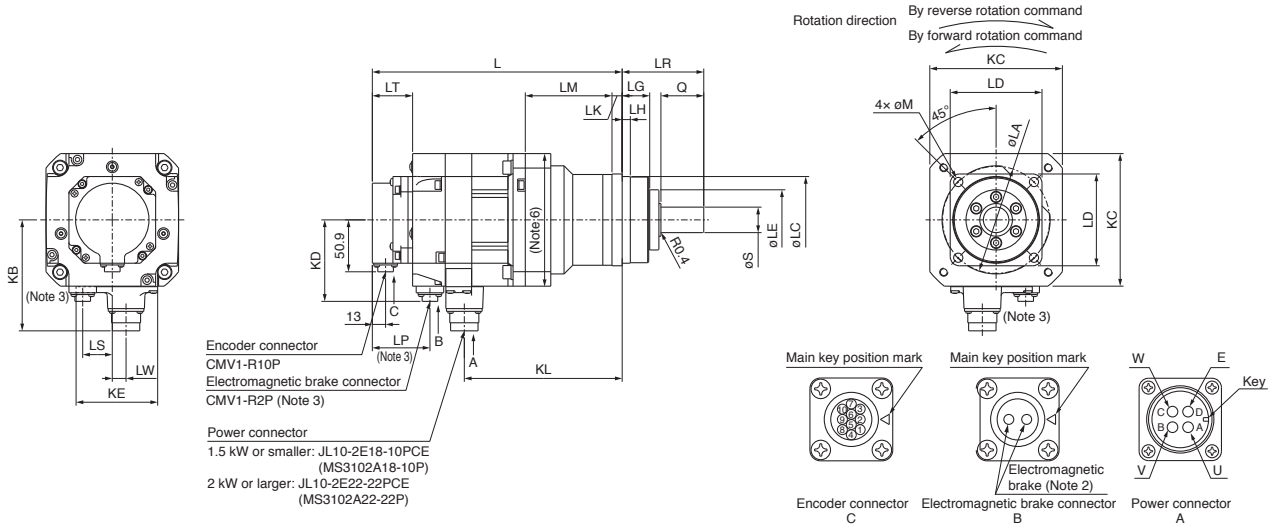

[Unit: mm]

Model HK-ST	Reduction ratio	Variable dimensions (Note 4) L	LA	LC	LD	LE	S	LG	LH	Q	LR	LK	LM	LT	KL	LP	LW	LS	M	KB	KD	KC	KE
52(B)G7 524(B)G7	1/5	210.5 (245)	105	85 $^{0}_{-0.035}$	90	59	25 $^{0}_{-0.021}$	27	8	42	80	10	85	35.5 (39.5)	154.8	(56.5)	13.5	(29)	9	108.8	(79.9)	130	80
	1/11																						
	1/21	222.5 (257)	135	115 $^{0}_{-0.035}$	120	84	40 $^{0}_{-0.025}$	35	13	82	133	13	94	35.5 (39.5)	166.8	(56.5)	13.5	(29)	11	108.8	(79.9)	130	80
	1/33																						
	1/45																						
102(B)G7 1024(B)G7	1/5	221.5 (256)	105	85 $^{0}_{-0.035}$	90	59	25 $^{0}_{-0.021}$	27	8	42	80	10	85	35.5 (39.5)	165.8	(56.5)	13.5	(29)	9	108.8	(79.9)	130	80
	1/11	233.5 (268)	135	115 $^{0}_{-0.035}$	120	84	40 $^{0}_{-0.025}$	35	13	82	133	13	94	35.5 (39.5)	177.8	(56.5)	13.5	(29)	11	108.8	(79.9)	130	80
	1/21																						
	1/33	249.5 (284)	190	165 $^{0}_{-0.063}$	170	122	50 $^{0}_{-0.025}$	53	13	82	156	16	107	35.5 (39.5)	193.8	(56.5)	13.5	(29)	14	108.8	(79.9)	130	80
	1/45																						
152(B)G7 1524(B)G7	1/5	232.5 (267)	105	85 $^{0}_{-0.035}$	90	59	25 $^{0}_{-0.021}$	27	8	42	80	10	85	35.5 (39.5)	176.8	(56.5)	13.5	(29)	9	108.8	(79.9)	130	80
	1/11	244.5 (279)	135	115 $^{0}_{-0.035}$	120	84	40 $^{0}_{-0.025}$	35	13	82	133	13	94	35.5 (39.5)	188.8	(56.5)	13.5	(29)	11	108.8	(79.9)	130	80
	1/21																						
	1/33	260.5 (295)	190	165 $^{0}_{-0.063}$	170	122	50 $^{0}_{-0.025}$	53	13	82	156	16	107	35.5 (39.5)	204.8	(56.5)	13.5	(29)	14	108.8	(79.9)	130	80
	1/45																						
202(B)G7 2024(B)G7	1/5	267.5 (317)	135	115 $^{0}_{-0.035}$	120	84	40 $^{0}_{-0.025}$	35	13	82	133	13	116	35.5 (42.5)	209.7	(62.5)	0	(44)	11	140.8	(96.9)	176	80
	1/11																						
	1/21	287.5 (337)	190	165 $^{0}_{-0.063}$	170	122	50 $^{0}_{-0.025}$	53	13	82	156	16	133	35.5 (42.5)	229.7	(62.5)	0	(44)	14	140.8	(96.9)	176	80
	1/33																						
	1/45																						
352(B)G7 3524(B)G7	1/5	287.5 (337)	135	115 $^{0}_{-0.035}$	120	84	40 $^{0}_{-0.025}$	35	13	82	133	13	116	35.5 (42.5)	229.7	(62.5)	0	(44)	11	140.8	(96.9)	176	80
	1/11	307.5 (357)	190	165 $^{0}_{-0.063}$	170	122	50 $^{0}_{-0.025}$	53	13	82	156	16	133	35.5 (42.5)	249.7	(62.5)	0	(44)	14	140.8	(96.9)	176	80
	1/21																						
502(B)G7 5024(B)G7	1/5	327.5 (377)	190	165 $^{0}_{-0.063}$	170	122	50 $^{0}_{-0.025}$	53	13	82	156	16	133	35.5 (42.5)	269.7	(62.5)	0	(44)	14	140.8	(96.9)	176	80
	1/11																						
702(B)G7 7024(B)G7	1/5	367.5 (417)	190	165 $^{0}_{-0.063}$	170	122	50 $^{0}_{-0.025}$	53	13	82	156	16	133	35.5 (42.5)	309.7	(62.5)	0	(44)	14	140.8	(96.9)	176	80

Notes:
1. The actual dimensions may be up to 3 mm larger than those shown in the drawing because of shifting and variance of parts that occur during the assembly and manufacture of the rotary servo motors. The dimensions and tolerances shown are applicable at a temperature of 20 °C and may vary depending on the ambient temperature. Design the machine to allow for sufficient space.
2. The electromagnetic brake terminals do not have polarity.
3. Only for the models with an electromagnetic brake.
4. The dimensions in brackets are for the models with an electromagnetic brake.
5. Use a friction coupling to fasten a load.
6. HK-ST202(B)G7 to HK-ST702(B)G7 and HK-ST2024(B)G7 to HK-ST7024(B)G7 have the maximum dimensions of 180 mm × 180 mm in this part.
7. HK-ST_G7K, a geared servo motor with a keyed shaft (with a key), is also available. Refer to "HK-ST Series Geared Servo Motor Special Shaft Dimensions" in this catalog for details.

HK-ST Series Geared Servo Motor Special Shaft Dimensions

The standard HK-ST_G7 (with a shaft-output type gear reducer for high precision applications, flange mounting) has a straight shaft. Note that this motor is also available with a keyed shaft (with a key) as HK-ST_G7K.

HK-ST_G7K (Note 1, 2, 3)

Keyed shaft (with a single pointed key)

Model	Reduction ratio	Variable dimensions						
		S	Q	W	QK	U	T	Y
HK-ST52(B)G7K HK-ST524(B)G7K	1/5	25	42	8	36	21	7	M6×12
	1/11							
	1/21	40	82	12	70	35	8	M10×20
	1/33							
	1/45							
HK-ST102(B)G7K HK-ST1024(B)G7K	1/5	25	42	8	36	21	7	M6×12
	1/11	40	82	12	70	35	8	M10×20
	1/21							
	1/33	50	82	14	70	44.5	9	M10×20
	1/45							
HK-ST152(B)G7K HK-ST1524(B)G7K	1/5	25	42	8	36	21	7	M6×12
	1/11	40	82	12	70	35	8	M10×20
	1/21	50	82	14	70	44.5	9	M10×20
	1/33							
	1/45							
HK-ST202(B)G7K HK-ST2024(B)G7K	1/5	40	82	12	70	35	8	M10×20
	1/11							
	1/21	50	82	14	70	44.5	9	M10×20
	1/33							
	1/45							
HK-ST352(B)G7K HK-ST3524(B)G7K	1/5	40	82	12	70	35	8	M10×20
	1/11	50	82	14	70	44.5	9	M10×20
	1/21							
HK-ST502(B)G7K HK-ST5024(B)G7K	1/5							
	1/11							
HK-ST702(B)G7K HK-ST7024(B)G7K	1/5							

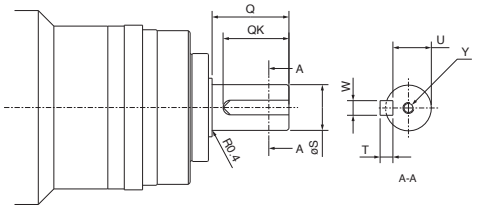

[Unit: mm]

Notes: 1. Do not use the servo motors with a keyed shaft for frequent start/stop applications as this may cause the damage to the shaft.
2. Dimensions not shown in the tables are the same as those of HK-ST_G7 with a straight shaft. Refer to "HK-ST_G7" of "HK-ST Series Geared Servo Motor Dimensions" in this catalog.
3. The key is included as an accessory and not mounted to the shaft.

HK-RT_W (Ultra-Low Inertia, Medium Capacity)

Specifications when connected with a 200 V servo amplifier

Flange size		[mm]	90 × 90			130 × 130		
Rotary servo motor model		HK-RT	103W	153W	203W	353W	503W	703W
Continuous running duty (Note 4)	Rated output	[kW]	1.0	1.5	2.0	3.5	5.0	7.0
	Rated torque (Note 5)	[N•m]	3.2	4.8	6.4	11.1	15.9	22.3
Maximum torque (Note 3)		[N•m]	8.0 (9.5)	11.9 (12.9)	15.9 (19.1)	27.9 (33.4)	47.7 (55.7)	66.8
Rated speed (Note 4)		[r/min]	3000					
Maximum speed (Note 4)		[r/min]	6700			6000		5000
Power rate at continuous rated torque [kW/s]	Without electromagnetic brake		141	251	317	280	403	655
	With electromagnetic brake		95.6	182	249	189	301	512
Rated current		[A]	5.2	11	9.5	16	25	28
Maximum current (Note 3)		[A]	17 (21)	34 (42)	30 (37)	51 (62)	90 (110)	102
Moment of inertia J [× 10^{-4} kg•m^2]	Without electromagnetic brake		0.721	0.909	1.28	4.44	6.29	7.58
	With electromagnetic brake		1.06	1.25	1.63	6.57	8.41	9.70
Recommended load to motor inertia ratio (Note 1)			11 times or less			10 times or less		
Speed/position detector			Batteryless absolute/incremental 26-bit encoder (resolution: 67,108,864 pulses/rev)					
Type			Permanent magnet synchronous motor					
Oil seal			None (Servo motors with an oil seal are available.)					
Electromagnetic brake			None (Servo motors with an electromagnetic brake are available.)					
Thermistor			None					
Insulation class			155 (F)					
Structure			Totally enclosed, natural cooling (IP rating: IP67) (Note 2, 6)			Totally enclosed, natural cooling (IP rating: IP67) (Note 2)		
Vibration resistance *1		[m/s^2]	X: 24.5, Y: 49			X: 24.5, Y: 24.5		
Vibration rank			V10 *3					
Permissible load for the shaft *2	L	[mm]	40			55		
	Radial	[N]	686			980		
	Thrust	[N]	196			490		
Mass [kg]	Without electromagnetic brake		3.6	4.4	5.9	13	17	20
	With electromagnetic brake		4.7	5.5	7.0	15	19	23

Notes: 1. Contact your local sales office if the load to motor inertia ratio exceeds the value in the table.
2. The shaft-through portion is excluded. Refer to the asterisk 4 of "Annotations for Rotary Servo Motor Specifications" on p. 4-86 in this catalog for the shaft-through portion.
3. The values in brackets are applicable when the torque is increased by combining a larger-capacity servo amplifier. Refer to "Combinations of Rotary Servo Motors and Servo Amplifiers" in this catalog for the available combinations.
4. The continuous running duty and the speed are not guaranteed when the power supply voltage is dropped.
5. When unbalanced torque is generated, such as in a vertical lift machine, keep the unbalanced torque of the machine under 70 % of the servo motor rated torque.
6. When IP67 cables are required, please contact Mitsubishi Electric System & Service Co., Ltd. OVERSEAS SERVICE SECTION. (Email: osb.webmaster@melsc.jp)

Refer to "Annotations for Rotary Servo Motor Specifications" on p. 4-86 in this catalog for details about asterisks 1 to 3.

Electromagnetic brake specifications (Note 1)

Model		HK-RT	103WB	153WB	203WB	353WB	503WB	703WB
Type (Note 3)			Spring actuated type safety brake					
Rated voltage (Note 4)			24 V DC (-10 % to 0 %)					
Power consumption		[W] at 20 °C	13.8			23		
Electromagnetic brake static friction torque (Note 5)		[N•m]	9.5 or higher			16 or higher		
Permissible braking work	Per braking	[J]	64			400		
	Per hour	[J]	640			4000		
Electromagnetic brake life (Note 2)	Number of braking times		5000					
	Work per braking	[J]	64			400		

Notes: 1. The electromagnetic brake is for holding. It cannot be used for deceleration applications.
2. Brake lining wear due to braking will increase the brake gap, but the gap is not adjustable. Therefore, the brake life indicates the number of times the brake can be applied before gap adjustment becomes necessary.
3. This type does not have a manual release mechanism. Use a 24 V DC power supply to release the brake electrically.
4. Prepare a power supply exclusively for the electromagnetic brake.
5. The value of the brake static friction torque is the lower limit in the initial state at 20 °C.

HK-RT_4W (Ultra-Low Inertia, Medium Capacity)

Specifications when connected with a 400 V servo amplifier

Flange size			[mm]	90 × 90			130 × 130		
Rotary servo motor model			HK-RT	1034W	1534W	2034W	3534W	5034W	7034W
Continuous running duty (Note 4)	Rated output		[kW]	1.0	1.5	2.0	3.5	5.0	7.0
	Rated torque (Note 5)		[N•m]	3.2	4.8	6.4	11.1	15.9	22.3
Maximum torque (Note 3)			[N•m]	8.0 (9.5)	11.9 (12.9)	15.9 (19.1)	27.9 (33.4)	47.7 (55.7)	66.8
Rated speed (Note 4)			[r/min]	3000					
Maximum speed (Note 4)			[r/min]	6700			6000		5000
Power rate at continuous rated torque [kW/s]	Without electromagnetic brake			141	251	317	280	403	655
	With electromagnetic brake			95.6	182	249	189	301	512
Rated current			[A]	2.6	5.3	4.7	7.8	13	14
Maximum current (Note 3)			[A]	8.5 (11)	18 (20)	15 (19)	26 (31)	45 (55)	51
Moment of inertia J [× 10^{-4} kg•m^2]	Without electromagnetic brake			0.721	0.909	1.28	4.44	6.29	7.58
	With electromagnetic brake			1.06	1.25	1.63	6.57	8.41	9.70
Recommended load to motor inertia ratio (Note 1)		MR-J5		11 times or less			10 times or less		
		MR-J5D		11 times or less			10 times or less		
Speed/position detector				Batteryless absolute/incremental 26-bit encoder (resolution: 67,108,864 pulses/rev)					
Type				Permanent magnet synchronous motor					
Oil seal				None (Servo motors with an oil seal are available.)					
Electromagnetic brake				None (Servo motors with an electromagnetic brake are available.)					
Thermistor				None					
Insulation class				155 (F)					
Structure				Totally enclosed, natural cooling (IP rating: IP67) (Note 2, 6)			Totally enclosed, natural cooling (IP rating: IP67) (Note 2)		
Vibration resistance *1			[m/s^2]	X: 24.5, Y: 49			X: 24.5, Y: 24.5		
Vibration rank				V10 *3					
Permissible load for the shaft *2	L		[mm]	40			55		
	Radial		[N]	686			980		
	Thrust		[N]	196			490		
Mass [kg]	Without electromagnetic brake			3.6	4.4	5.9	13	17	20
	With electromagnetic brake			4.7	5.5	7.0	15	19	23

Notes: 1. Contact your local sales office if the load to motor inertia ratio exceeds the value in the table.
2. The shaft-through portion is excluded. Refer to the asterisk 4 of "Annotations for Rotary Servo Motor Specifications" on p. 4-86 in this catalog for the shaft-through portion.
3. The values in brackets are applicable when the torque is increased by combining a larger-capacity servo amplifier. Refer to "Combinations of Rotary Servo Motors and Servo Amplifiers" in this catalog for the available combinations.
4. The continuous running duty and the speed are not guaranteed when the power supply voltage is dropped.
5. When unbalanced torque is generated, such as in a vertical lift machine, keep the unbalanced torque of the machine under 70 % of the servo motor rated torque.
6. When IP67 cables are required, please contact Mitsubishi Electric System & Service Co., Ltd. OVERSEAS SERVICE SECTION. (Email: osb.webmaster@melsc.jp)

Refer to "Annotations for Rotary Servo Motor Specifications" on p. 4-86 in this catalog for details about asterisks 1 to 3.

Electromagnetic brake specifications (Note 1)

Model			HK-RT	1034WB	1534WB	2034WB	3534WB	5034WB	7034WB
Type (Note 3)				Spring actuated type safety brake					
Rated voltage (Note 4)				24 V DC (-10 % to 0 %)					
Power consumption			[W] at 20 °C	13.8			23		
Electromagnetic brake static friction torque (Note 5)			[N•m]	9.5 or higher			16 or higher		
Permissible braking work	Per braking		[J]	64			400		
	Per hour		[J]	640			4000		
Electromagnetic brake life (Note 2)	Number of braking times			5000					
	Work per braking		[J]	64			400		

Notes: 1. The electromagnetic brake is for holding. It cannot be used for deceleration applications.
2. Brake lining wear due to braking will increase the brake gap, but the gap is not adjustable. Therefore, the brake life indicates the number of times the brake can be applied before gap adjustment becomes necessary.
3. This type does not have a manual release mechanism. Use a 24 V DC power supply to release the brake electrically.
4. Prepare a power supply exclusively for the electromagnetic brake.
5. The value of the brake static friction torque is the lower limit in the initial state at 20 °C.

HK-RT_W Torque Characteristics (Note 1)

When connected with a 200 V servo amplifier

: For 3-phase 200 V AC
: For 1-phase 200 V AC

HK-RT103W (Note 2)
Standard torque

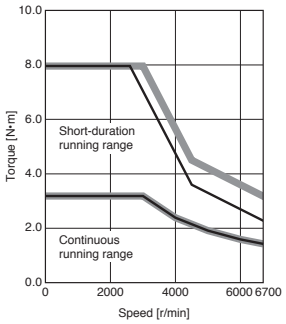

HK-RT103W (Note 2)
Torque increased

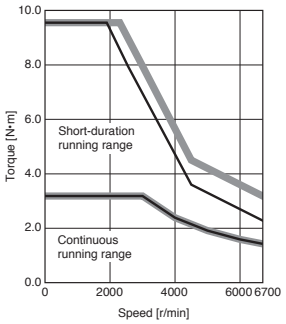

HK-RT153W (Note 2)
Standard torque

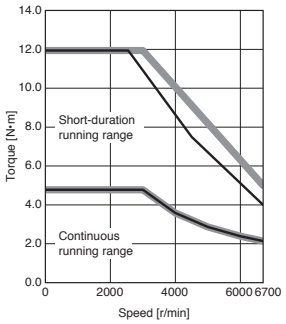

HK-RT153W
Torque increased

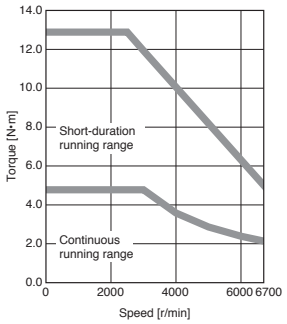

HK-RT203W (Note 2)
Standard torque

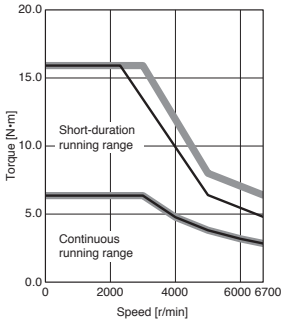

HK-RT203W
Torque increased

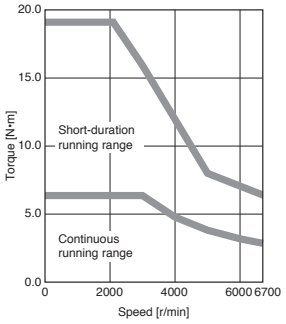

HK-RT353W
Standard torque

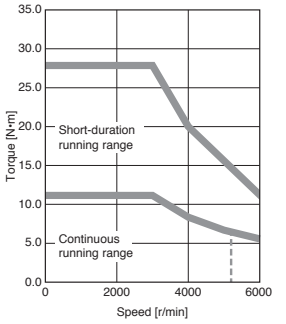

HK-RT353W
Torque increased

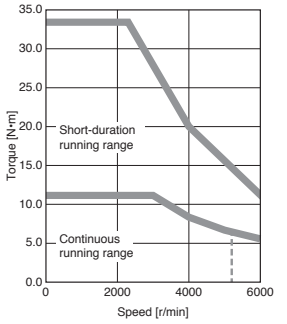

HK-RT503W
Standard torque

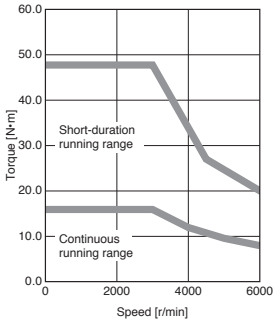

HK-RT503W
Torque increased

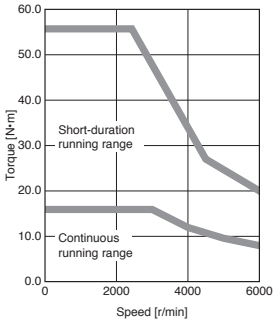

HK-RT703W
Standard torque

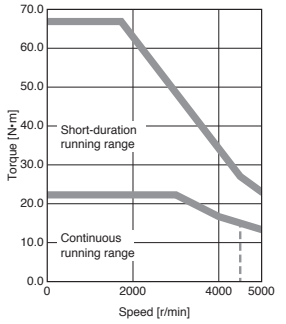

Notes: 1. Torque drops when the power supply voltage is below the specified value. - - - - : A rough indication of the possible continuous running range for 3-phase 170 V AC
2. When using a combination of the servo motors of over 750 W and MR-J5-100_ or MR-J5-200_ with a 1-phase power supply, use the servo amplifiers at 75 % or less of the effective load ratio.

HK-RT_4W Torque Characteristics (Note 1)

When connected with a 400 V servo amplifier

: For 3-phase 400 V AC
: For 3-phase 380 V AC

HK-RT1034W
Standard torque

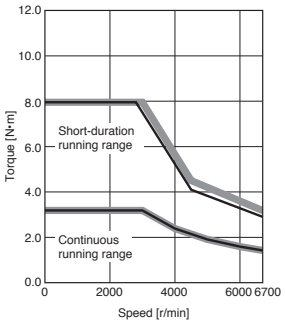

HK-RT1034W
Torque increased

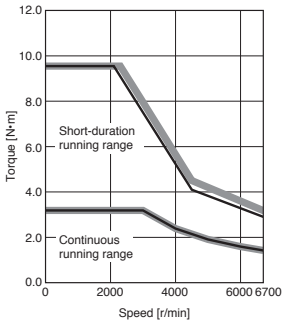

HK-RT1534W
Standard torque

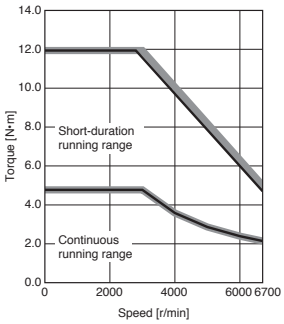

HK-RT1534W
Torque increased

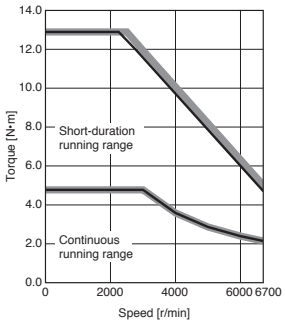

HK-RT2034W
Standard torque

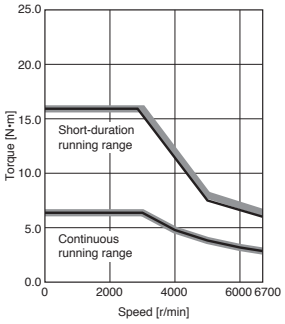

HK-RT2034W
Torque increased

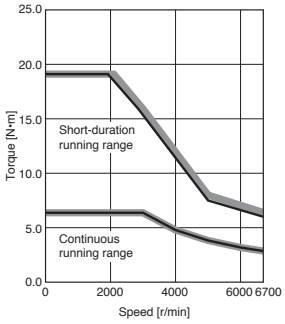

HK-RT3534W
Standard torque

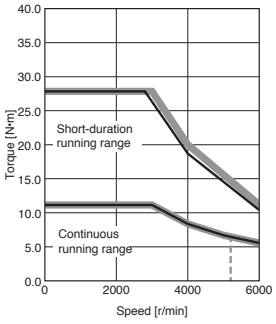

HK-RT3534W
Torque increased

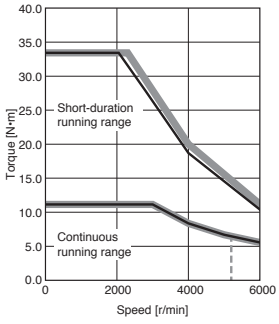

HK-RT5034W
Standard torque

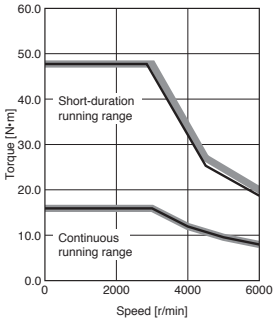

HK-RT5034W
Torque increased

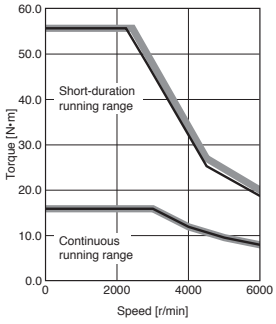

HK-RT7034W
Standard torque

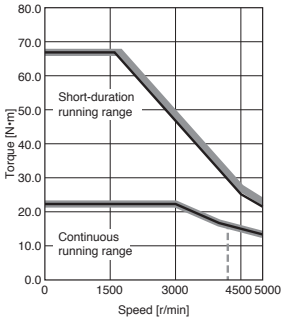

Notes: 1. Torque drops when the power supply voltage is below the specified value. - - - - : A rough indication of the possible continuous running range for 3-phase 323 V AC

HK-RT Series Dimensions (Note 3, 4, 5)

HK-RT103W(B), HK-RT153W(B), HK-RT203W(B)
HK-RT1034W(B), HK-RT1534W(B), HK-RT2034W(B)

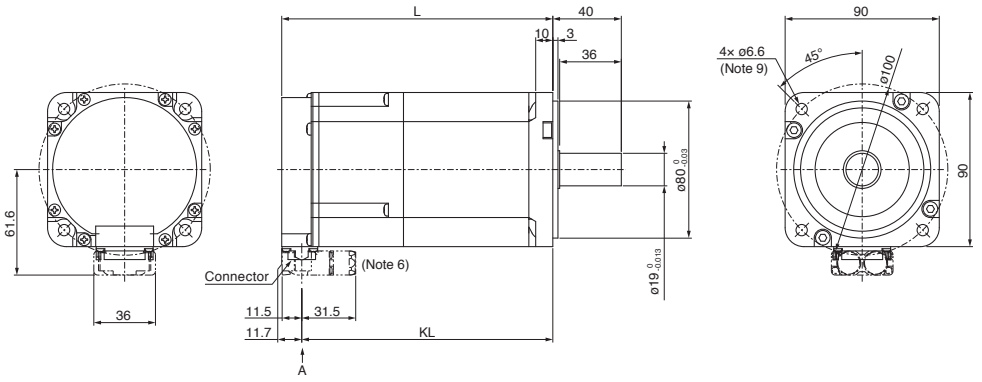

Electromagnetic brake (Note 2)

Pin No.	Signal name
5	B1
6	B2

Power supply

Pin No.	Signal name
1	E
2	U
3	W
4	V

Encoder

Pin No.	Signal name
11	P5
12	MR
13	LG
14	MRR

Model	Variable dimensions (Note 1)	
	L	KL
HK-RT103W(B) HK-RT1034W(B)	118.9 (158.3)	107.2 (146.6)
HK-RT153W(B) HK-RT1534W(B)	136.9 (176.3)	125.2 (164.6)
HK-RT203W(B) HK-RT2034W(B)	172.9 (212.3)	161.2 (200.6)

[Unit: mm]

HK-RT353W(B), HK-RT503W(B), HK-RT703W(B)
HK-RT3534W(B), HK-RT5034W(B), HK-RT7034W(B)

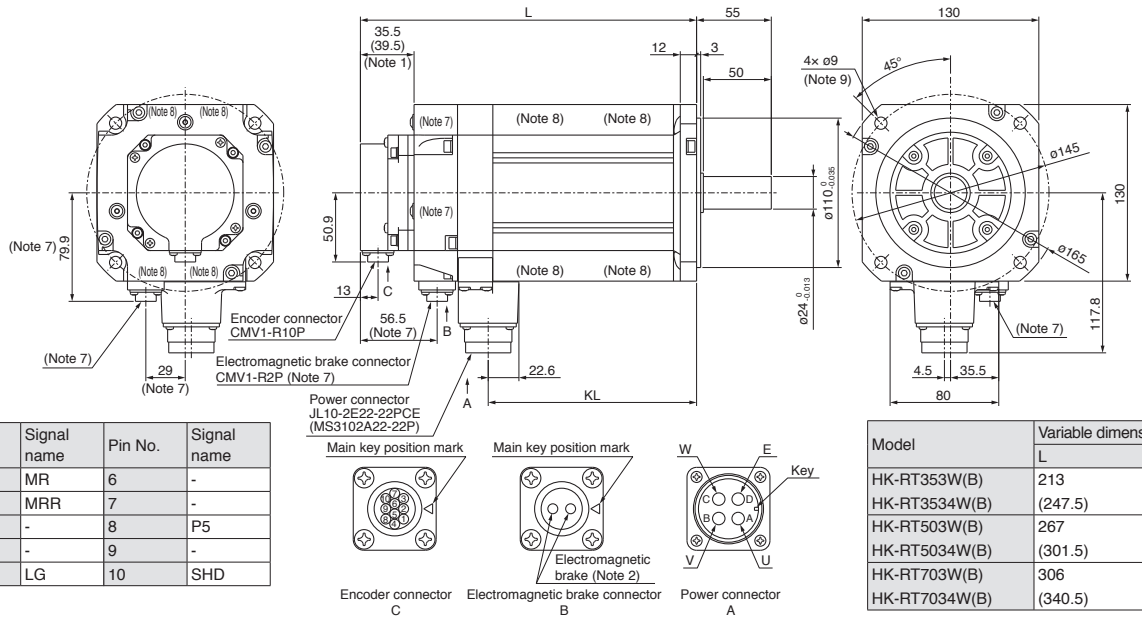

Encoder

Pin No.	Signal name	Pin No.	Signal name
1	MR	6	-
2	MRR	7	-
3	-	8	P5
4	-	9	-
5	LG	10	SHD

Model	Variable dimensions (Note 1)	
	L	KL
HK-RT353W(B) HK-RT3534W(B)	213 (247.5)	153.4
HK-RT503W(B) HK-RT5034W(B)	267 (301.5)	207.4
HK-RT703W(B) HK-RT7034W(B)	306 (340.5)	246.4

[Unit: mm]

Notes: 1. The dimensions in brackets are for the models with an electromagnetic brake.
2. The electromagnetic brake terminals do not have polarity.
3. The dimensions are the same regardless of whether or not an oil seal is installed.
4. Use a friction coupling to fasten a load.
5. The actual dimensions may be up to 3 mm larger than those shown in the drawing because of shifting and variance of parts that occur during the assembly and manufacture of the rotary servo motors. The dimensions and tolerances shown are applicable at a temperature of 20 °C and may vary depending on the ambient temperature. Design the machine to allow for sufficient space.
6. The dimensions are applicable when a dual type motor cable is led to the load side. Refer to "HK-RT Series Connector Dimensions" in this catalog for the dimensions when leading the cable to the opposite to the load side or leading vertically and when using a single type motor cable.
7. Only for the models with an electromagnetic brake.
8. HK-RT703W(B) and HK-RT7034W(B) have screw holes (M6×10.5) for eyebolts. When using eyebolts, use a washer of ø14 mm or larger. Tighten the bolt until the washer is closely attached to the servo motor's surface.
9. Use hexagon socket head cap screws when mounting the servo motor.

HK-RT Series Connector Dimensions

Cable direction: load side/opposite to load side

Model	Variable dimensions							
	Dual cable type				Single cable type			
	A	B	C	D	A	B	C	D
HK-RT103(4)W HK-RT153(4)W HK-RT203(4)W	61.6	36	11.7	31.5	64.4	32	11.7	40

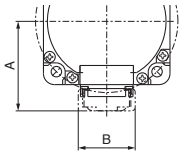

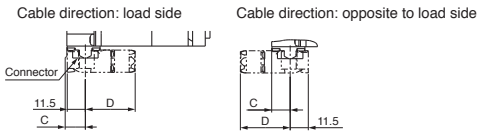

* The drawing shows a dual cable type as an example.

[Unit: mm]

Cable direction: vertical

Model	Variable dimensions					
	Dual cable type			Single cable type		
	A	B	C	A	B	C
HK-RT103(4)W HK-RT153(4)W HK-RT203(4)W	88.2	36	11.7	96.7	32	11.7

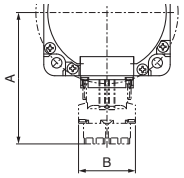

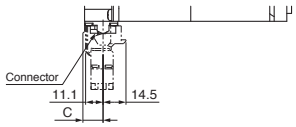

* The drawing shows a dual cable type as an example.

[Unit: mm]

HK-RT Series with Special Shaft Dimensions

Servo motors with the following specifications are also available.

K: Keyed shaft (with a double round-ended key) (Note 1, 3)

Model	Variable dimensions									
	S	LR	Q	W	QK	QL	U	R	T	Y
HK-RT103(4)WK HK-RT153(4)WK HK-RT203(4)WK	$19^{0}_{-0.013}$	40	36	6	25	5	$15.5^{0}_{-0.1}$	3	6	M5×20
HK-RT353(4)WK HK-RT503(4)WK HK-RT703(4)WK	$24^{0}_{-0.013}$	55	50	8	36	5	$20^{0}_{-0.1}$	4	7	M8×20

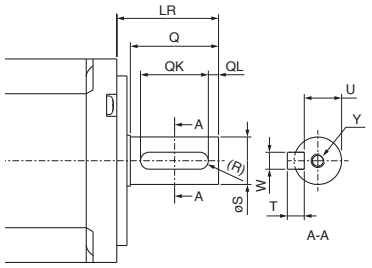

[Unit: mm]

N: Keyed shaft (without a key) (Note 1, 2)

Model	Variable dimensions								
	S	LR	Q	W	QK	QL	U	R	Y
HK-RT103(4)WN HK-RT153(4)WN HK-RT203(4)WN	$19^{0}_{-0.013}$	40	36	$6^{0}_{-0.03}$	25	5	$15.5^{0}_{-0.1}$	3	M5×20
HK-RT353(4)WN HK-RT503(4)WN HK-RT703(4)WN	$24^{0}_{-0.013}$	55	50	$8^{0}_{-0.036}$	36	5	$20^{0}_{-0.1}$	4	M8×20

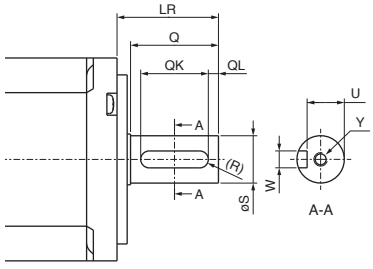

[Unit: mm]

Notes: 1. Do not use the servo motors with a keyed shaft for frequent start/stop applications as this may cause the damage to the shaft.
2. The servo motor is supplied without a key. The user needs to prepare a key.
3. The key is included as an accessory and not mounted to the shaft.

HK-JT_J (Low Inertia, Medium/Large Capacity)

Specifications when connected with a 200 V servo amplifier

Flange size		[mm]	220 × 220			250 × 250			
Rotary servo motor model		HK-JT	701MJ	11K1MJ	15K1MJ	15K1J		22K1MJ	
Continuous running duty (Note 3)	Rated output	[kW]	7.0	11	15	15		22	
	Rated torque (Note 4)	[N•m]	44.6	70.0	95.5	143		140	
Maximum torque		[N•m]	134	210	286	429		420	
Rated speed (Note 3)		[r/min]	1500			1000		1500	
Maximum speed (Note 3)		[r/min]	3000			1500		2500	
Power rate at continuous rated torque [kW/s]	Without electromagnetic brake		113	223	289	418		401	
	With electromagnetic brake		101	204	271	-			
Rated current		[A]	34	61	76	67		99	
Maximum current		[A]	111	200	246	231		315	
Moment of inertia J [× 10^{-4} kg•m^2]	Without electromagnetic brake		176	220	315	489			
	With electromagnetic brake		196	240	336	-			
Recommended load to motor inertia ratio (Note 1)			10 times or less (Note 5)	10 times or less					
Speed/position detector			Batteryless absolute/incremental 26-bit encoder (resolution: 67,108,864 pulses/rev)						
Type			Permanent magnet synchronous motor						
Oil seal			Installed						
Electromagnetic brake			None (Servo motors with an electromagnetic brake are available.)			None			
Thermistor			None			Built-in			
Insulation class			155 (F)						
Structure			Totally enclosed, natural cooling (IP rating: IP67) (Note 2)			Totally enclosed, force cooling (IP rating: IP44) (Note 2)			
Vibration resistance *1		[m/s^2]	X: 24.5, Y: 24.5						
Vibration rank			V10 *3						
Permissible load for the shaft *2	L	[mm]	85	116		140			
	Radial	[N]	2450	2940		3234			
	Thrust	[N]	980			1470			
Mass [kg]	Without electromagnetic brake		53	62	86	120			
	With electromagnetic brake		65	74	97	-			
Cooling fan	Power supply voltage		-			3-phase 200 V AC to 240 V AC			
	Frequency	[Hz]	-			50	60	50	60
	Input	[W]	-			65	85	65	85
	Current	[A]	-			0.20	0.23	0.20	0.23

Notes: 1. Contact your local sales office if the load to motor inertia ratio exceeds the value in the table.
2. The shaft-through portion is excluded. Refer to the asterisk 4 of "Annotations for Rotary Servo Motor Specifications" on p. 4-86 in this catalog for the shaft-through portion.
3. The continuous running duty and the speed are not guaranteed when the power supply voltage is dropped.
4. When unbalanced torque is generated, such as in a vertical lift machine, keep the unbalanced torque of the machine under 70 % of the servo motor rated torque.
5. When the speed exceeds 2500 r/min, the recommended load to motor inertia ratio is 5 times or less.

Refer to "Annotations for Rotary Servo Motor Specifications" on p. 4-86 in this catalog for details about asterisks 1 to 3.

Electromagnetic brake specifications (Note 1)

Model		HK-JT	701MBJ	11K1MBJ	15K1MBJ
Type (Note 3)			Spring actuated type safety brake		
Rated voltage (Note 4)			24 V DC (-10 % to 0 %)		
Power consumption		[W] at 20 °C	32		
Electromagnetic brake static friction torque (Note 5)		[N•m]	126 or higher		
Permissible braking work	Per braking	[J]	5000		
	Per hour	[J]	45200		
Electromagnetic brake life (Note 2)	Number of braking times		20000		
	Work per braking	[J]	400		

Notes: 1. The electromagnetic brake is for holding. It cannot be used for deceleration applications.
2. Brake lining wear due to braking will increase the brake gap, but the gap is not adjustable. Therefore, the brake life indicates the number of times the brake can be applied before gap adjustment becomes necessary.
3. This type does not have a manual release mechanism. Use a 24 V DC power supply to release the brake electrically.
4. Prepare a power supply exclusively for the electromagnetic brake.
5. The value of the brake static friction torque is the lower limit in the initial state at 20 °C.

HK-JT_4J (Low Inertia, Medium/Large Capacity)

Specifications when connected with a 400 V servo amplifier

Flange size		[mm]	220 × 220			250 × 250	
Rotary servo motor model		HK-JT	701M4J	11K1M4J	15K1M4J	22K1M4J	
Continuous running duty (Note 3)	Rated output	[kW]	7.0	11	15	22	
	Rated torque (Note 4)	[N•m]	44.6	70.0	95.5	140	
Maximum torque		[N•m]	134	210	286	420	
Rated speed (Note 3)		[r/min]	1500				
Maximum speed (Note 3)		[r/min]	3000			2500	
Power rate at continuous rated torque [kW/s]	Without electromagnetic brake		113	223	289	401	
	With electromagnetic brake		101	204	271	-	
Rated current		[A]	17	31	38	50	
Maximum current		[A]	56	100	123	170	
Moment of inertia J [× 10^{-4} kg•m^2]	Without electromagnetic brake		176	220	315	489	
	With electromagnetic brake		196	240	336	-	
Recommended load to motor inertia ratio (Note 1)			10 times or less (Note 5)	10 times or less			
Speed/position detector			Batteryless absolute/incremental 26-bit encoder (resolution: 67,108,864 pulses/rev)				
Type			Permanent magnet synchronous motor				
Oil seal			Installed				
Electromagnetic brake			None (Servo motors with an electromagnetic brake are available.)			None	
Thermistor			None			Built-in	
Insulation class			155 (F)				
Structure			Totally enclosed, natural cooling (IP rating: IP67) (Note 2)			Totally enclosed, force cooling (IP rating: IP44) (Note 2)	
Vibration resistance *1		[m/s^2]	X: 24.5, Y: 24.5				
Vibration rank			V10 *3				
Permissible load for the shaft *2	L	[mm]	85	116		140	
	Radial	[N]	2450	2940		3234	
	Thrust	[N]	980			1470	
Mass [kg]	Without electromagnetic brake		53	62	86	120	
	With electromagnetic brake		65	74	97	-	
Cooling fan	Power supply voltage		-			3-phase 380 V AC to 480 V AC	
	Frequency	[Hz]	-			50	60
	Input	[W]	-			65	90
	Current	[A]	-			0.12	0.14

Notes: 1. Contact your local sales office if the load to motor inertia ratio exceeds the value in the table.
2. The shaft-through portion is excluded. Refer to the asterisk 4 of "Annotations for Rotary Servo Motor Specifications" on p. 4-86 in this catalog for the shaft-through portion.
3. The continuous running duty and the speed are not guaranteed when the power supply voltage is dropped.
4. When unbalanced torque is generated, such as in a vertical lift machine, keep the unbalanced torque of the machine under 70 % of the servo motor rated torque.
5. When the speed exceeds 2000 r/min, the recommended load to motor inertia ratio is 7 times or less.

Refer to "Annotations for Rotary Servo Motor Specifications" on p. 4-86 in this catalog for details about asterisks 1 to 3.

Electromagnetic brake specifications (Note 1)

Model		HK-JT	701M4BJ	11K1M4BJ	15K1M4BJ
Type (Note 3)			Spring actuated type safety brake		
Rated voltage (Note 4)			24 V DC (-10 % to 0 %)		
Power consumption		[W] at 20 °C	32		
Electromagnetic brake static friction torque (Note 5)		[N•m]	126 or higher		
Permissible braking work	Per braking	[J]	5000		
	Per hour	[J]	45200		
Electromagnetic brake life (Note 2)	Number of braking times		20000		
	Work per braking	[J]	400		

Notes: 1. The electromagnetic brake is for holding. It cannot be used for deceleration applications.
2. Brake lining wear due to braking will increase the brake gap, but the gap is not adjustable. Therefore, the brake life indicates the number of times the brake can be applied before gap adjustment becomes necessary.
3. This type does not have a manual release mechanism. Use a 24 V DC power supply to release the brake electrically.
4. Prepare a power supply exclusively for the electromagnetic brake.
5. The value of the brake static friction torque is the lower limit in the initial state at 20 °C.

HK-JT_J Torque Characteristics (Note 1)

When connected with a 200 V servo amplifier

: For 3-phase 200 V AC

HK-JT701MJ
Standard torque

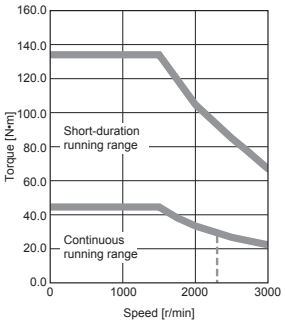

HK-JT11K1MJ
Standard torque

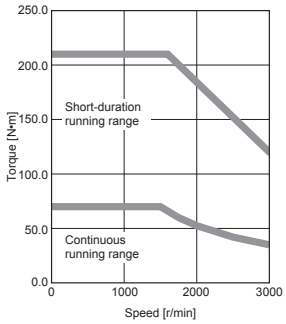

HK-JT15K1MJ
Standard torque

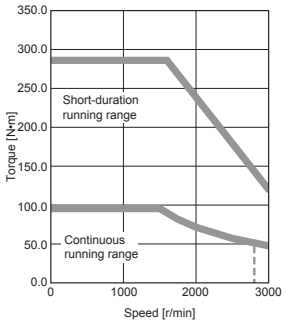

HK-JT15K1J
Standard torque

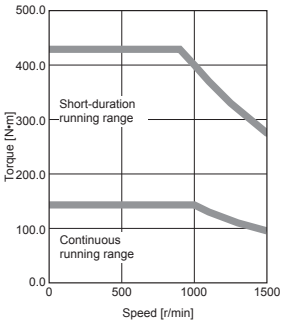

HK-JT22K1MJ
Standard torque

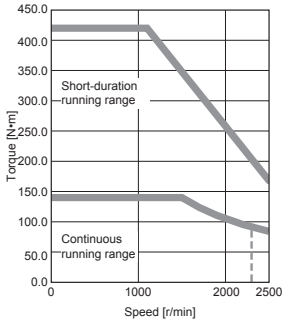

HK-JT_4J Torque Characteristics (Note 2)

When connected with a 400 V servo amplifier

: For 3-phase 400 V AC
: For 3-phase 380 V AC

HK-JT701M4J
Standard torque

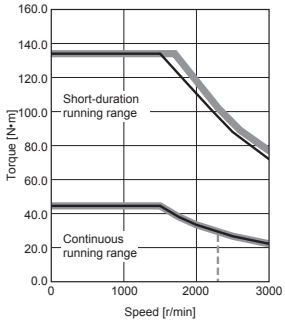

HK-JT11K1M4J
Standard torque

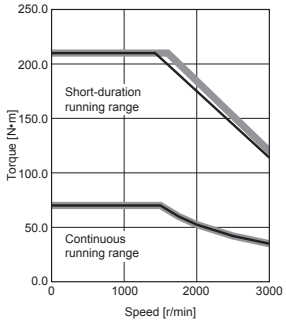

HK-JT15K1M4J
Standard torque

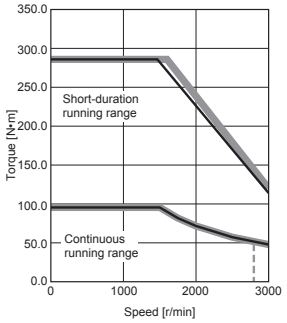

HK-JT22K1M4J
Standard torque

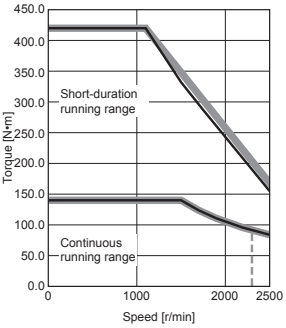

Notes: 1. Torque drops when the power supply voltage is below the specified value. - - - - : A rough indication of the possible continuous running range for 3-phase 170 V AC
2. Torque drops when the power supply voltage is below the specified value. - - - - : A rough indication of the possible continuous running range for 3-phase 323 V AC

HK-JT Series Dimensions (Note 3, 5)

HK-JT701M(B)J,
HK-JT701M4(B)J

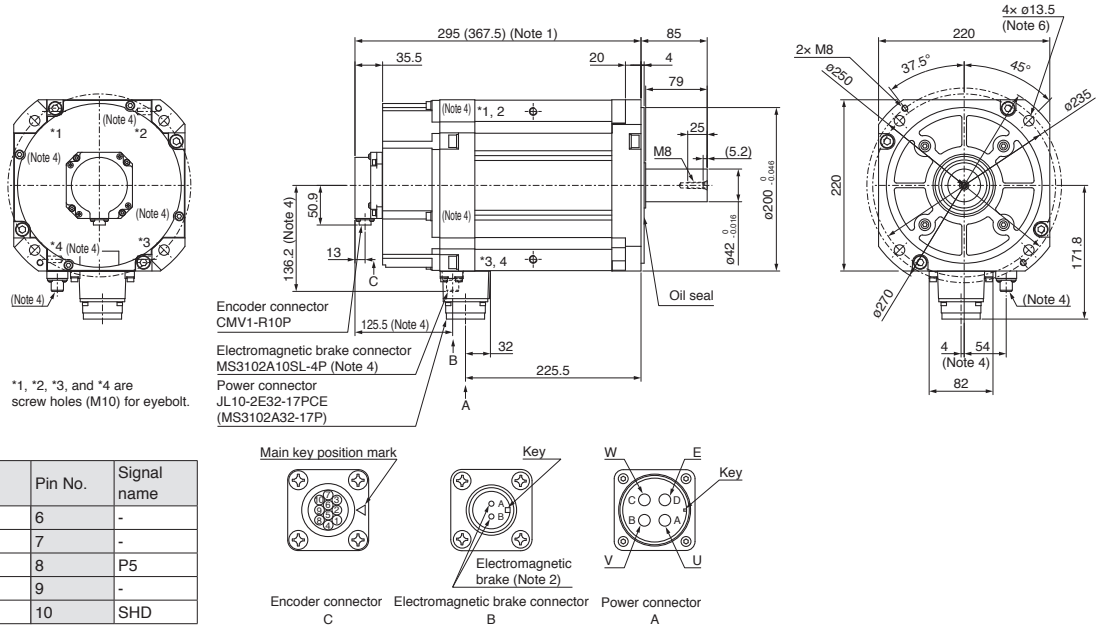

Encoder

Pin No.	Signal name	Pin No.	Signal name
1	MR	6	-
2	MRR	7	-
3	-	8	P5
4	-	9	-
5	LG	10	SHD

[Unit: mm]

HK-JT11K1M(B)J, HK-JT15K1M(B)J,
HK-JT11K1M4(B)J, HK-JT15K1M4(B)J

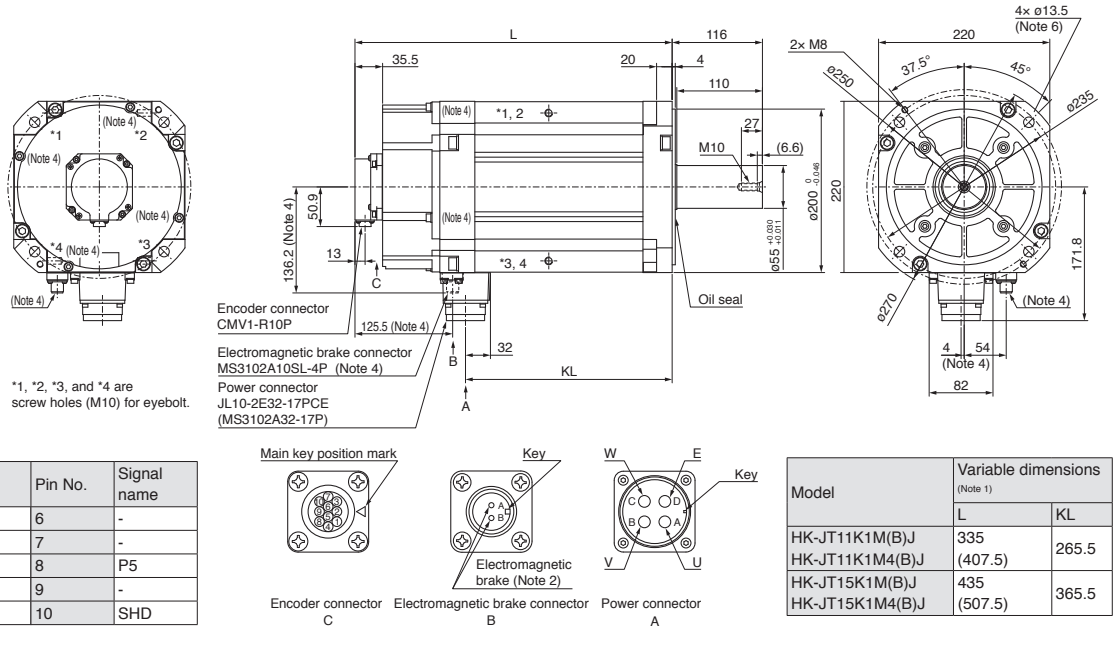

Encoder

Pin No.	Signal name	Pin No.	Signal name
1	MR	6	-
2	MRR	7	-
3	-	8	P5
4	-	9	-
5	LG	10	SHD

Model	Variable dimensions (Note 1)	
	L	KL
HK-JT11K1M(B)J HK-JT11K1M4(B)J	335 (407.5)	265.5
HK-JT15K1M(B)J HK-JT15K1M4(B)J	435 (507.5)	365.5

[Unit: mm]

Notes: 1. The dimensions in brackets are for the models with an electromagnetic brake.
2. The electromagnetic brake terminals do not have polarity.
3. Use a friction coupling to fasten a load.
4. Only for the models with an electromagnetic brake.
5. The actual dimensions may be up to 3 mm larger than those shown in the drawing because of shifting and variance of parts that occur during the assembly and manufacture of the rotary servo motors. The dimensions and tolerances shown are applicable at a temperature of 20 °C and may vary depending on the ambient temperature. Design the machine to allow for sufficient space.
6. Use hexagon socket head cap screws when mounting the servo motor.

HK-JT Series Dimensions (Note 1, 2, 7)

HK-JT15K1J, HK-JT22K1MJ,
HK-JT22K1M4J

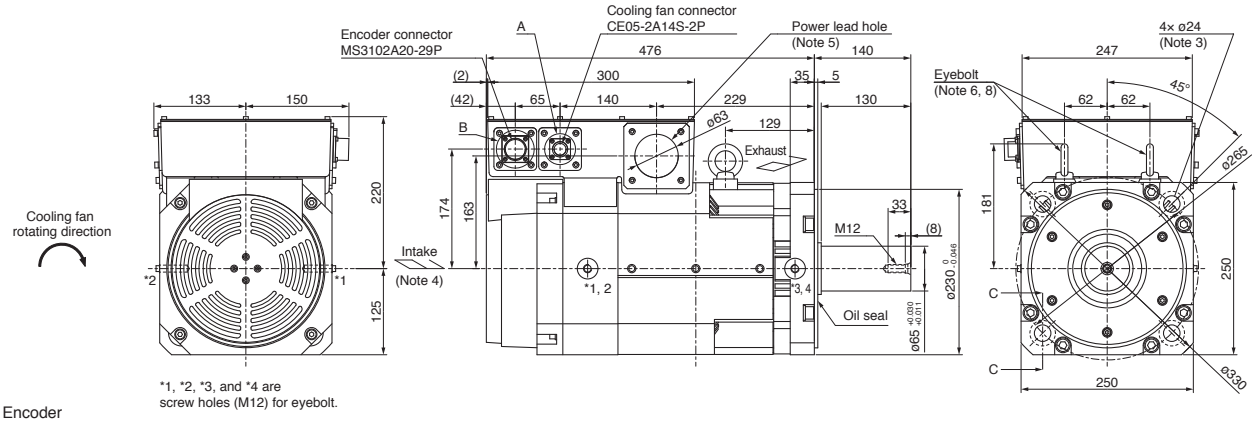

Encoder

Pin No.	Signal name	Pin No.	Signal name
A	-	K	THM1
B	-	L	THM2
C	MR	M	-
D	MRR	N	SHD
E	-	P	-
F	-	R	LG
G	LG	S	P5
H	-	T	-
J	-	-	-

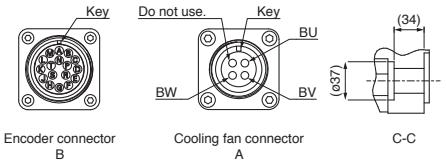

[Unit: mm]

Notes: 1. Use a friction coupling to fasten a load.
2. The actual dimensions may be up to 3 mm larger than those shown in the drawing because of shifting and variance of parts that occur during the assembly and manufacture of the rotary servo motors. The dimensions and tolerances shown are applicable at a temperature of 20 °C and may vary depending on the ambient temperature. Design the machine to allow for sufficient space.
3. Use hexagon socket head cap screws when mounting the servo motor.
4. Leave a clearance of at least 150 mm between the intake side of the servo motor and wall.
5. Prevent oil, water, dust, and other foreign matter from entering the servo motor through the lead hole.
6. A washer is placed between the eyebolt and the servo motor to adjust the bolt angle.
7. The terminal block in the terminal box consists of M10 screws for the motor power input (U/V/W).
8. When using the servo motor without the eyebolt, plug the threaded hole with a bolt of M12 × 20 or shorter.

HK-JT Series with Special Shaft Dimensions

N: Keyed shaft (without a key) (Note 1, 2)

Model	Variable dimension								
	S	LR	Q	W	QK	QL	U	R	Y
HK-JT701M(4)JN	$42^{\ 0}_{-0.016}$	85	79	$12^{\ 0}_{-0.040}$	70	5	$37^{\ 0}_{-0.12}$	6	M8×25
HK-JT11K1M(4)JN HK-JT15K1M(4)JN	$55^{+0.030}_{+0.011}$	116	110	$16^{\ 0}_{-0.040}$	90	5	$49^{\ 0}_{-0.12}$	8	M10×27
HK-JT15K1JN HK-JT22K1M(4)JN	$65^{+0.030}_{+0.011}$	140	130	$18^{\ 0}_{-0.040}$	120	5	$58^{\ 0}_{-0.12}$	9	M12×33

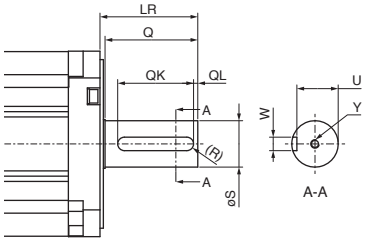

[Unit: mm]

Notes: 1. Do not use the servo motors with a keyed shaft for frequent start/stop applications as this may cause the damage to the shaft.
2. The servo motor is supplied without a key. The user needs to prepare a key.

Power Supply Capacity

The power supply capacity of a servo amplifier is the same when used with either a 3-phase power supply input or a 1-phase power supply input. When the servo motor runs at less than the rated speed, the power supply capacity is smaller than the value in the table.

1-axis servo amplifiers (200 V)

Rotary servo motor		Servo amplifier (Note 2)	Power supply capacity [kVA] (Note 1)
HK-KT_W	HK-KT053W	MR-J5-10G/B/A	0.3
		MR-J5-20G/B/A	0.3
		MR-J5-40G/B/A	0.3
	HK-KT13W	MR-J5-10G/B/A	0.3
		MR-J5-20G/B/A	0.3
		MR-J5-40G/B/A	0.3
	HK-KT1M3W	MR-J5-20G/B/A	0.5
		MR-J5-40G/B/A	0.5
		MR-J5-60G/B/A	0.5
	HK-KT13UW	MR-J5-10G/B/A	0.3
		MR-J5-20G/B/A	0.3
		MR-J5-40G/B/A	0.3
	HK-KT23W	MR-J5-20G/B/A	0.5
		MR-J5-40G/B/A	0.5
		MR-J5-60G/B/A	0.5
	HK-KT43W	MR-J5-40G/B/A	0.9
		MR-J5-60G/B/A	0.9
		MR-J5-70G/B/A	0.9
	HK-KT63W	MR-J5-70G/B/A	1.3
		MR-J5-100G/B/A	1.3
		MR-J5-200G/B/A	1.3
	HK-KT23UW	MR-J5-20G/B/A	0.5
		MR-J5-40G/B/A	0.5
		MR-J5-60G/B/A	0.5
	HK-KT43UW	MR-J5-40G/B/A	0.8
		MR-J5-60G/B/A	0.8
		MR-J5-70G/B/A	0.8
	HK-KT7M3W	MR-J5-70G/B/A	1.3
		MR-J5-100G/B/A	1.3
		MR-J5-200G/B/A	1.3
	HK-KT103W	MR-J5-100G/B/A	1.9
		MR-J5-200G/B/A	1.9
		MR-J5-350G/B/A	2.0
	HK-KT63UW	MR-J5-60G/B/A	1.3
		MR-J5-70G/B/A	1.3
		MR-J5-100G/B/A	1.1
	HK-KT7M3UW	MR-J5-70G/B/A	1.3
		MR-J5-100G/B/A	1.3
		MR-J5-200G/B/A	1.3
	HK-KT103UW	MR-J5-100G/B/A	1.8
		MR-J5-200G/B/A	1.8
		MR-J5-350G/B/A	1.8
	HK-KT153W	MR-J5-200G/B/A	2.6
		MR-J5-350G/B/A	2.8
	HK-KT203W	MR-J5-200G/B/A	3.2
		MR-J5-350G/B/A	3.6
	HK-KT202W	MR-J5-200G/B/A	3.3
		MR-J5-350G/B/A	3.6

Rotary servo motor		Servo amplifier (Note 2)	Power supply capacity [kVA] (Note 1)
HK-KT_4_W	HK-KT434W	MR-J5-20G/B/A	0.6
		MR-J5-40G/B/A	0.6
		MR-J5-60G/B/A	0.6
	HK-KT634W	MR-J5-40G/B/A	0.8
		MR-J5-60G/B/A	0.8
		MR-J5-70G/B/A	0.8
	HK-KT7M34W	MR-J5-40G/B/A	0.9
		MR-J5-60G/B/A	0.9
		MR-J5-70G/B/A	0.9
	HK-KT1034W	MR-J5-60G/B/A	1.1
		MR-J5-70G/B/A	1.1
		MR-J5-100G/B/A	1.1
	HK-KT1534W	MR-J5-70G/B/A	1.5
		MR-J5-100G/B/A	1.5
		MR-J5-200G/B/A	1.5
	HK-KT2034W	MR-J5-100G/B/A	1.9
		MR-J5-200G/B/A	1.9
		MR-J5-350G/B/A	2.0
	HK-KT2024W	MR-J5-100G/B/A	1.9
		MR-J5-200G/B/A	1.9
		MR-J5-350G/B/A	2.1
HK-MT_W	HK-MT053W	MR-J5-10G/B/A	0.3
		MR-J5-20G/B/A	0.3
		MR-J5-40G/B/A	0.3
	HK-MT13W	MR-J5-10G/B/A	0.3
		MR-J5-20G/B/A	0.4
		MR-J5-40G/B/A	0.4
	HK-MT1M3W	MR-J5-20G/B/A	0.5
		MR-J5-40G/B/A	0.5
	HK-MT23W	MR-J5-20G/B/A	0.5
		MR-J5-40G/B/A	0.6
	HK-MT43W	MR-J5-40G/B/A	0.9
		MR-J5-70G/B/A	0.9
	HK-MT63W	MR-J5-70G/B/A	1.2
		MR-J5-200G/B/A	1.2
	HK-MT7M3W	MR-J5-70G/B/A	1.3
		MR-J5-200G/B/A	1.6
	HK-MT103W	MR-J5-100G/B/A	1.8
		MR-J5-200G/B/A	2.0
HK-MT_VW	HK-MT053VW	MR-J5-10G/B/A	0.3
		MR-J5-20G/B/A	0.3
		MR-J5-40G/B/A	0.3
	HK-MT13VW	MR-J5-10G/B/A	0.3
		MR-J5-20G/B/A	0.4
		MR-J5-40G/B/A	0.4
	HK-MT1M3VW	MR-J5-20G/B/A	0.5
		MR-J5-40G/B/A	0.5
	HK-MT23VW	MR-J5-20G/B/A	0.5
		MR-J5-40G/B/A	0.6
	HK-MT43VW	MR-J5-60G/B/A	0.9
		MR-J5-70G/B/A	0.9
	HK-MT63VW	MR-J5-70G/B/A	1.2
		MR-J5-200G/B/A	1.2
	HK-MT7M3VW	MR-J5-70G/B/A	1.3
		MR-J5-200G/B/A	1.6
	HK-MT103VW	MR-J5-200G/B/A	2.0
		MR-J5-350G/B/A	2.0

Notes: 1. The power supply capacity varies depending on the power supply impedance.
2. Note that the power supply capacity for servo amplifiers with special specifications is the same as that for standard servo amplifiers. Refer to the servo amplifiers with the same rated output.

Power Supply Capacity

The power supply capacity of a servo amplifier is the same when used with either a 3-phase power supply input or a 1-phase power supply input. When the servo motor runs at less than the rated speed, the power supply capacity is smaller than the value in the table.

1-axis servo amplifiers (200 V)

Rotary servo motor		Servo amplifier (Note 2)	Power supply capacity [kVA] (Note 1)
HK-ST_W (Note 3)	HK-ST52W	MR-J5-60G/B/A	1.0
		MR-J5-70G/B/A	1.0
		MR-J5-100G/B/A	1.0
	HK-ST102W	MR-J5-100G/B/A	1.7
		MR-J5-200G/B/A	1.7
		MR-J5-350G/B/A	1.8
	HK-ST172W	MR-J5-200G/B/A	3.0
		MR-J5-350G/B/A	3.2
	HK-ST202AW	MR-J5-200G/B/A	3.5
		MR-J5-350G/B/A	3.5
	HK-ST302W	MR-J5-350G/B/A	4.9
		MR-J5-500G/B/A	4.9
	HK-ST353W	MR-J5-350G/B/A	5.5
		MR-J5-500G/B/A	7.4
	HK-ST503W	MR-J5-500G/B/A	7.5
		MR-J5-700G/B/A	10
	HK-ST7M2UW	MR-J5-70G/B/A	1.3
		MR-J5-100G/B/A	1.3
		MR-J5-200G/B/A	1.3
	HK-ST172UW	MR-J5-200G/B/A	3.0
		MR-J5-350G/B/A	3.2
	HK-ST202W	MR-J5-200G/B/A	3.5
		MR-J5-350G/B/A	3.5
	HK-ST352W	MR-J5-350G/B/A	5.5
		MR-J5-500G/B/A	5.5
	HK-ST502W	MR-J5-500G/B/A	7.5
		MR-J5-700G/B/A	7.8
	HK-ST702W	MR-J5-700G/B/A	10
HK-ST_4_W	HK-ST524W	MR-J5-40G/B/A	0.7
		MR-J5-60G/B/A	0.7
		MR-J5-70G/B/A	0.7
	HK-ST1024W	MR-J5-60G/B/A	1.3
		MR-J5-70G/B/A	1.3
		MR-J5-100G/B/A	1.3
	HK-ST1724W	MR-J5-100G/B/A	1.7
		MR-J5-200G/B/A	1.7
		MR-J5-350G/B/A	1.8
	HK-ST2024AW	MR-J5-100G/B/A	1.9
		MR-J5-200G/B/A	1.9
		MR-J5-350G/B/A	2.0
	HK-ST3024W	MR-J5-200G/B/A	2.6
		MR-J5-350G/B/A	2.8
	HK-ST2024W	MR-J5-200G/B/A	2.1
		MR-J5-350G/B/A	2.2
	HK-ST3524W	MR-J5-200G/B/A	3.2
		MR-J5-350G/B/A	3.5
	HK-ST5024W	MR-J5-350G/B/A	4.9
		MR-J5-500G/B/A	5.0
	HK-ST7024W	MR-J5-500G/B/A	6.6
		MR-J5-700G/B/A	6.9

Rotary servo motor		Servo amplifier (Note 2)	Power supply capacity [kVA] (Note 1)
HK-RT_W	HK-RT103W	MR-J5-100G/B/A	1.7
		MR-J5-200G/B/A	1.7
	HK-RT153W	MR-J5-200G/B/A	2.5
		MR-J5-500G/B/A	3.1
	HK-RT203W	MR-J5-200G/B/A	3.5
		MR-J5-350G/B/A	3.5
	HK-RT353W	MR-J5-350G/B/A	5.5
		MR-J5-500G/B/A	6.4
	HK-RT503W	MR-J5-500G/B/A	7.5
		MR-J5-700G/B/A	8.8
	HK-RT703W	MR-J5-700G/B/A	13
HK-JT	HK-JT701MJ	MR-J5-700G/B/A	10
	HK-JT11K1MJ	MR-J5-12KG/B/A	16
	HK-JT15K1MJ	MR-J5-17KG/B/A	22
	HK-JT15K1J	MR-J5-17KG/B/A	22
	HK-JT22K1MJ	MR-J5-25KG/B/A	33

Notes: 1. The power supply capacity varies depending on the power supply impedance.
2. Note that the power supply capacity for servo amplifiers with special specifications is the same as that for standard servo amplifiers. Refer to the servo amplifiers with the same rated output.
3. A power supply capacity for HK-ST152G_ is 2.5 kVA.

Power Supply Capacity

The power supply capacity of a servo amplifier is the same when used with either a 3-phase power supply input or a 1-phase power supply input. When the servo motor runs at less than the rated speed, the power supply capacity is smaller than the value in the table.

1-axis servo amplifiers (400 V)

Rotary servo motor		Servo amplifier (Note 2)	Power supply capacity [kVA] (Note 1)
HK-KT_W	HK-KT053W	MR-J5-60G4/B4/A4	0.3
		MR-J5-100G4/B4/A4	0.3
	HK-KT13W	MR-J5-60G4/B4/A4	0.5
		MR-J5-100G4/B4/A4	0.4
	HK-KT1M3W	MR-J5-60G4/B4/A4	0.6
		MR-J5-100G4/B4/A4	0.6
HK-KT_4_W	HK-KT434W	MR-J5-60G4/B4/A4	1.2
		MR-J5-100G4/B4/A4	1.1
		MR-J5-200G4/B4/A4	1.1
	HK-KT634W	MR-J5-100G4/B4/A4	1.5
		MR-J5-200G4/B4/A4	1.6
		MR-J5-350G4/B4/A4	1.6
	HK-KT7M34W	MR-J5-100G4/B4/A4	1.8
		MR-J5-200G4/B4/A4	1.8
		MR-J5-350G4/B4/A4	1.7
	HK-KT1034W	MR-J5-100G4/B4/A4	2.3
		MR-J5-200G4/B4/A4	2.3
		MR-J5-350G4/B4/A4	2.3
	HK-KT634UW	MR-J5-60G4/B4/A4	1.3
		MR-J5-100G4/B4/A4	1.3
		MR-J5-200G4/B4/A4	1.5
	HK-KT1034UW	MR-J5-100G4/B4/A4	1.7
		MR-J5-200G4/B4/A4	2.3
		MR-J5-350G4/B4/A4	2.3
	HK-KT1534W	MR-J5-200G4/B4/A4	3.1
		MR-J5-350G4/B4/A4	3.1
	HK-KT2034W	MR-J5-200G4/B4/A4	4.0
		MR-J5-350G4/B4/A4	4.0
	HK-KT2024W	MR-J5-200G4/B4/A4	4.0
		MR-J5-350G4/B4/A4	4.0

Rotary servo motor		Servo amplifier (Note 2)	Power supply capacity [kVA] (Note 1)
HK-ST_4_W (Note 3)	HK-ST524W	MR-J5-60G4/B4/A4	1.0
		MR-J5-100G4/B4/A4	1.0
		MR-J5-200G4/B4/A4	1.0
	HK-ST1024W	MR-J5-100G4/B4/A4	1.7
		MR-J5-200G4/B4/A4	1.7
		MR-J5-350G4/B4/A4	1.7
	HK-ST1724W	MR-J5-200G4/B4/A4	3.2
		MR-J5-350G4/B4/A4	3.2
		MR-J5-500G4/B4/A4	3.2
	HK-ST2024AW	MR-J5-200G4/B4/A4	3.5
		MR-J5-350G4/B4/A4	3.5
		MR-J5-500G4/B4/A4	3.5
	HK-ST3024W	MR-J5-350G4/B4/A4	4.9
		MR-J5-500G4/B4/A4	4.9
		MR-J5-700G4/B4/A4	4.9
	HK-ST3534W	MR-J5-350G4/B4/A4	5.5
		MR-J5-500G4/B4/A4	5.5
	HK-ST5034W	MR-J5-500G4/B4/A4	7.5
		MR-J5-700G4/B4/A4	7.5
	HK-ST2024W	MR-J5-200G4/B4/A4	3.5
		MR-J5-350G4/B4/A4	3.5
		MR-J5-500G4/B4/A4	3.5
	HK-ST3524W	MR-J5-350G4/B4/A4	5.5
		MR-J5-500G4/B4/A4	5.5
		MR-J5-700G4/B4/A4	5.9
	HK-ST5024W	MR-J5-500G4/B4/A4	7.5
		MR-J5-700G4/B4/A4	7.5
	HK-ST7024W	MR-J5-700G4/B4/A4	10
HK-RT_4W	HK-RT1034W	MR-J5-100G4/B4/A4	2.2
		MR-J5-200G4/B4/A4	2.2
	HK-RT1534W	MR-J5-200G4/B4/A4	3.1
		MR-J5-500G4/B4/A4	2.7
	HK-RT2034W	MR-J5-200G4/B4/A4	3.9
		MR-J5-350G4/B4/A4	3.9
	HK-RT3534W	MR-J5-350G4/B4/A4	6.2
		MR-J5-500G4/B4/A4	5.4
	HK-RT5034W	MR-J5-500G4/B4/A4	7.3
		MR-J5-700G4/B4/A4	7.9
	HK-RT7034W	MR-J5-700G4/B4/A4	10
HK-JT	HK-JT701M4J	MR-J5-700G4/B4/A4	10
	HK-JT11K1M4J	MR-J5-12KG4/B4/A4	16
	HK-JT15K1M4J	MR-J5-17KG4/B4/A4	22
	HK-JT22K1M4J	MR-J5-25KG4/B4/A4	33

Notes: 1. The power supply capacity varies depending on the power supply impedance.
2. Note that the power supply capacity for servo amplifiers with special specifications is the same as that for standard servo amplifiers. Refer to the servo amplifiers with the same rated output.
3. A power supply capacity for HK-ST1524G_ is 2.5 kVA.

Power Supply Capacity

The power supply capacity of a servo amplifier is the same when used with either a 3-phase power supply input or a 1-phase power supply input. When the servo motor runs at less than the rated speed, the power supply capacity is smaller than the value in the table.

Multi-axis servo amplifiers (200 V)

Rotary servo motor		Servo amplifier (Note 3)	Power supply capacity [kVA] (Note 1, 2)
HK-KT_W	HK-KT053W	MR-J5W2-22G/B	0.3
		MR-J5W2-44G/B	0.3
		MR-J5W3-222G/B	0.3
		MR-J5W3-444G/B	0.3
	HK-KT13W	MR-J5W2-22G/B	0.3
		MR-J5W2-44G/B	0.3
		MR-J5W3-222G/B	0.3
		MR-J5W3-444G/B	0.3
	HK-KT1M3W	MR-J5W2-22G/B	0.5
		MR-J5W2-44G/B	0.5
		MR-J5W3-222G/B	0.5
		MR-J5W3-444G/B	0.5
	HK-KT13UW	MR-J5W2-22G/B	0.3
		MR-J5W2-44G/B	0.3
		MR-J5W3-222G/B	0.3
		MR-J5W3-444G/B	0.3
	HK-KT23W	MR-J5W2-22G/B	0.5
		MR-J5W2-44G/B	0.5
		MR-J5W3-222G/B	0.5
		MR-J5W3-444G/B	0.5
	HK-KT43W	MR-J5W2-44G/B	0.9
		MR-J5W2-77G/B	0.9
		MR-J5W2-1010G/B	0.9
		MR-J5W3-444G/B	0.9
	HK-KT63W	MR-J5W2-77G/B	1.3
		MR-J5W2-1010G/B	1.3
	HK-KT23UW	MR-J5W2-22G/B	0.5
		MR-J5W2-44G/B	0.5
		MR-J5W3-222G/B	0.5
		MR-J5W3-444G/B	0.5
	HK-KT43UW	MR-J5W2-44G/B	0.8
		MR-J5W2-77G/B	0.8
		MR-J5W2-1010G/B	0.8
		MR-J5W3-444G/B	0.8
	HK-KT7M3W	MR-J5W2-77G/B	1.3
		MR-J5W2-1010G/B	1.3
	HK-KT103W	MR-J5W2-1010G/B	1.9
	HK-KT63UW	MR-J5W2-77G/B	1.3
		MR-J5W2-1010G/B	1.3
	HK-KT7M3UW	MR-J5W2-77G/B	1.3
		MR-J5W2-1010G/B	1.3
	HK-KT103UW	MR-J5W2-1010G/B	1.3

Rotary servo motor		Servo amplifier (Note 3)	Power supply capacity [kVA] (Note 1, 2)
HK-KT_4_W	HK-KT434W	MR-J5W2-22G/B	0.6
		MR-J5W2-44G/B	0.6
		MR-J5W3-222G/B	0.6
		MR-J5W3-444G/B	0.6
	HK-KT634W	MR-J5W2-44G/B	0.8
		MR-J5W2-77G/B	0.8
		MR-J5W2-1010G/B	0.8
		MR-J5W3-444G/B	0.8
	HK-KT7M34W	MR-J5W2-44G/B	0.9
		MR-J5W2-77G/B	0.9
		MR-J5W2-1010G/B	0.9
		MR-J5W3-444G/B	0.9
	HK-KT1034W	MR-J5W2-77G/B	1.1
		MR-J5W2-1010G/B	1.1
	HK-KT1534W	MR-J5W2-77G/B	1.5
		MR-J5W2-1010G/B	1.5
	HK-KT2034W	MR-J5W2-1010G/B	1.9
	HK-KT2024W	MR-J5W2-1010G/B	1.9
HK-MT_W	HK-MT053W	MR-J5W2-22G/B	0.3
		MR-J5W2-44G/B	0.3
		MR-J5W3-222G/B	0.3
		MR-J5W3-444G/B	0.3
	HK-MT13W	MR-J5W2-22G/B	0.4
		MR-J5W2-44G/B	0.4
		MR-J5W3-222G/B	0.4
		MR-J5W3-444G/B	0.4
	HK-MT1M3W	MR-J5W2-22G/B	0.5
		MR-J5W2-44G/B	0.5
		MR-J5W3-222G/B	0.5
		MR-J5W3-444G/B	0.5
	HK-MT23W	MR-J5W2-22G/B	0.5
		MR-J5W2-44G/B	0.5
		MR-J5W3-222G/B	0.5
		MR-J5W3-444G/B	0.5
	HK-MT43W	MR-J5W2-44G/B	0.9
		MR-J5W2-77G/B	0.9
		MR-J5W2-1010G/B	0.9
		MR-J5W3-444G/B	0.9
	HK-MT63W	MR-J5W2-77G/B	1.2
		MR-J5W2-1010G/B	1.2
	HK-MT7M3W	MR-J5W2-77G/B	1.3
		MR-J5W2-1010G/B	1.3
	HK-MT103W	MR-J5W2-1010G/B	1.8

Notes: 1. The power supply capacity varies depending on the power supply impedance.
2. The listed values are the power supply capacity for one servo motor. For the multi-axis servo amplifiers, calculate the power supply capacity with the equation below:
Power supply capacity [kVA] = Sum of power supply capacity [kVA] of the connected servo motors
3. Note that the power supply capacity for servo amplifiers with special specifications is the same as that for standard servo amplifiers.
Refer to the servo amplifiers with the same rated output.

Power Supply Capacity

Multi-axis servo amplifiers (200 V)

The power supply capacity of a servo amplifier is the same when used with either a 3-phase power supply input or a 1-phase power supply input. When the servo motor runs at less than the rated speed, the power supply capacity is smaller than the value in the table.

Rotary servo motor		Servo amplifier (Note 3)	Power supply capacity [kVA] (Note 1, 2)
HK-MT_VW	HK-MT053VW	MR-J5W2-22G/B	0.3
		MR-J5W2-44G/B	0.3
		MR-J5W3-222G/B	0.3
		MR-J5W3-444G/B	0.3
	HK-MT13VW	MR-J5W2-22G/B	0.4
		MR-J5W2-44G/B	0.4
		MR-J5W3-222G/B	0.4
		MR-J5W3-444G/B	0.4
	HK-MT1M3VW	MR-J5W2-22G/B	0.5
		MR-J5W2-44G/B	0.5
		MR-J5W3-222G/B	0.5
		MR-J5W3-444G/B	0.5
	HK-MT23VW	MR-J5W2-22G/B	0.5
		MR-J5W2-44G/B	0.5
		MR-J5W3-222G/B	0.5
		MR-J5W3-444G/B	0.5
	HK-MT43VW	MR-J5W2-77G/B	0.9
		MR-J5W2-1010G/B	0.9
	HK-MT63VW	MR-J5W2-77G/B	1.2
		MR-J5W2-1010G/B	1.2
	HK-MT7M3VW	MR-J5W2-77G/B	1.3
		MR-J5W2-1010G/B	1.3
HK-ST_W	HK-ST52W	MR-J5W2-77G/B	1.0
		MR-J5W2-1010G/B	1.0
	HK-ST102W	MR-J5W2-1010G/B	1.7
	HK-ST7M2UW	MR-J5W2-77G/B	1.3
		MR-J5W2-1010G/B	1.3
HK-ST_4_W	HK-ST524W	MR-J5W2-44G/B	0.7
		MR-J5W2-77G/B	0.7
		MR-J5W3-444G/B	0.7
	HK-ST1024W	MR-J5W2-77G/B	1.3
		MR-J5W2-1010G/B	1.3
	HK-ST1724W	MR-J5W2-1010G/B	1.7
	HK-ST2024AW	MR-J5W2-1010G/B	1.9
HK-RT_W	HK-RT103W	MR-J5W2-1010G/B	1.7

Notes: 1. The power supply capacity varies depending on the power supply impedance.
2. The listed values are the power supply capacity for one servo motor. For the multi-axis servo amplifiers, calculate the power supply capacity with the equation below:
Power supply capacity [kVA] = Sum of power supply capacity [kVA] of the connected servo motors
3. Note that the power supply capacity for servo amplifiers with special specifications is the same as that for standard servo amplifiers.
Refer to the servo amplifiers with the same rated output.

Drive unit (400 V)

Select power supply capacity on the basis of the capacity of the power regeneration converter unit.

Power regeneration converter unit	Power supply capacity [kVA] (Note 1, 2)
MR-CV11K4	16
MR-CV18K4	27
MR-CV30K4	43
MR-CV37K4	53
MR-CV45K4	64
MR-CV55K4	78
MR-CV75K4	107

Notes: 1. Select power supply capacity on the basis of the capacity of the power regeneration converter unit even when multiple drive units are connected to the converter unit. Calculate the total output wattage of the servo motors driven by the drive units which are connected to the power regeneration converter unit. If this wattage is smaller than the capacity of the converter unit, the power supply capacity can be lower than the value in the table.
2. An acceleration of the servo motor requires a current of 2 to 2.5 times the rated current. Secure the voltage of the main circuit power supply terminals (L1/L2/L3) of the power regeneration converter unit within the permissible voltage fluctuation. The power supply capacity varies depending on the power supply impedance.

Annotations for Rotary Servo Motor Specifications

*1. The vibration direction is shown in the diagram below. The numerical value indicates the maximum value of the component (commonly the bracket in the opposite direction of the load side).
Fretting tends to occur on the bearing when the servo motor stops. Thus, maintain vibration level at approximately one-half of the allowable value.

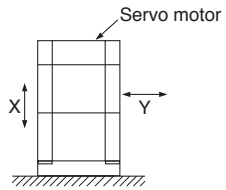

*2. Refer to the diagram below for the permissible load for the shaft. Ensure that loads applied on the shaft do not exceed the values specified in the table. The values in the table are applicable when each load is applied singly.

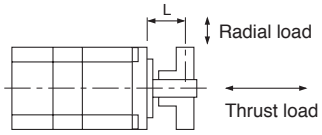

L: Distance between the flange mounting surface and the center of load

*3. V10 indicates that the amplitude of the servo motor itself is 10 μm or less. The following shows mounting orientation and measuring position of the servo motor during the measurement:

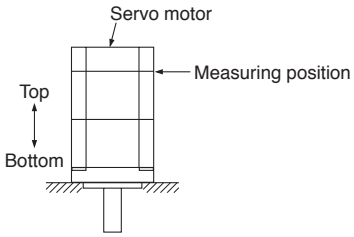

*4. Refer to the diagram below for the shaft-through portion.

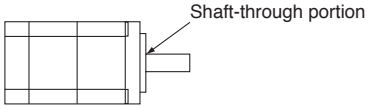

Annotations for Geared Servo Motor Specifications

*1. Refer to the diagram below for the permissible load for the shaft. Ensure that loads applied on the shaft do not exceed the values specified in the table. The values in the table are applicable when each load is applied singly.

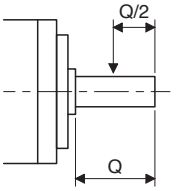

Q: Shaft length

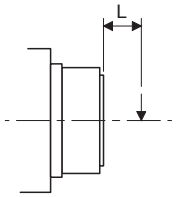

L: Distance between the gear reducer end and the center of load

With a gear reducer for general industrial machines (G1/G1H)
With a shaft-output type gear reducer for high precision applications, flange mounting (G7)

With a flange-output type gear reducer for high precision applications, flange mounting (G5)

*2. Do not mount the following servo motor in a way that the servo motor is tilted to the shaft direction or to the shaft rotation direction.
- HK-ST102(4)G1/G1H 1/43, 1/59
- HK-ST152(4)G1/G1H 1/29, 1/35, 1/43, 1/59
- HK-ST202(4)G1/G1H 1/29, 1/35, 1/43, 1/59
- HK-ST352(4)G1/G1H all reduction ratios
- HK-ST502(4)G1/G1H all reduction ratios
- HK-ST702(4)G1/G1H all reduction ratios

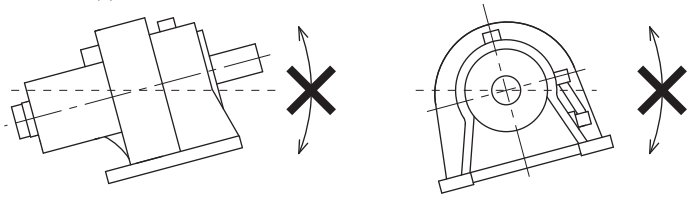

5 Linear Servo Motors

Model Designation 5-2

Specifications
LM-H3 series 5-8
LM-AJ series 5-10
LM-F series 5-12
LM-K2 series 5-14
LM-U2 series 5-16
LM-AU series 5-18

Power Supply Capacity 5-20

Dimensions
LM-H3 series 5-22
LM-AJ series 5-24
LM-F series 5-28
LM-K2 series 5-30
LM-U2 series 5-32
LM-AU series 5-34

List of Linear Encoders 5-39
Determining the Number of the Secondary-Side (Magnet) Blocks 5-41

* Refer to p. 7-90 in this catalog for conversion of units.
* The characteristics and numerical values without tolerances mentioned in this catalog are representative values.

Model Designation (Note 1)

●LM-H3 series

L M - H 3 P 2 A - 0 7 P - __ (Primary side: coil)

Symbol	Linear servo motor model
BSS0	LM-H3P2A-07P
CSS0	LM-H3P3A-12P
	LM-H3P3B-24P
	LM-H3P3C-36P
	LM-H3P3D-48P
ASS0	LM-H3P7A-24P
	LM-H3P7B-48P
	LM-H3P7C-72P
	LM-H3P7D-96P

Symbol	Maximum speed [m/s]
P	3.0

Symbol	Continuous thrust [N]
07	70
12	120
24	240
36	360
48	480
72	720
96	960

Symbol	Length (nominal) [mm]
A	128
B	224
C	320
D	416

Symbol	Width (nominal) [mm]
2	50
3	65
7	100

Primary side (coil)

L M - H 3 S 2 0 - 2 8 8 - __ (Secondary side: magnet)

Symbol	Linear servo motor model
BSS0	LM-H3S20-288
	LM-H3S20-384
	LM-H3S20-480
	LM-H3S20-768
CSS0	LM-H3S30-288
	LM-H3S30-384
	LM-H3S30-480
	LM-H3S30-768
ASS0	LM-H3S70-288
	LM-H3S70-384
	LM-H3S70-480
	LM-H3S70-768

Symbol	Length (nominal) [mm]
288	288
384	384
480	480
768	768

Symbol	Width (nominal) [mm]
2	42
3	60
7	95

Secondary side (magnet)

Notes: 1. This section describes what each symbol in a model name indicates. Some combinations of symbols are not available.

Model Designation (Note 1)

●LM-AJ series

L M - A J P 1 B - 0 7 K - __ (Primary side: coil)

Symbol	Linear servo motor model
JSS0	LM-AJP1B-07K
	LM-AJP1D-14K
	LM-AJP2B-12S
	LM-AJP2D-23T
	LM-AJP3B-17N
	LM-AJP3D-35R
	LM-AJP4B-22M
	LM-AJP4D-45N

Symbol	Maximum speed [m/s]
M	2.0
N	2.5
R	3.5
S	4.0
T	5.0
K	6.5

Symbol	Continuous thrust [N]
07	68.1
12	117.0
14	136.2
17	174.5
22	223.4
23	234.0
35	348.9
45	446.8

Symbol	Length (nominal) [mm]
B	96
D	176

Symbol	Width (nominal) [mm]
1	50
2	75
3	100
4	125

Primary side (coil)

L M - A J S 1 0 - 0 8 0 - __ (Secondary side: magnet)

Symbol	Linear servo motor model
JSS0	LM-AJS10-080
	LM-AJS10-200
	LM-AJS10-400
	LM-AJS20-080
	LM-AJS20-200
	LM-AJS20-400
	LM-AJS30-080
	LM-AJS30-200
	LM-AJS30-400
	LM-AJS40-080
	LM-AJS40-200
	LM-AJS40-400

Symbol	Length (nominal) [mm]
080	80
200	200
400	400

Symbol	Width (nominal) [mm]
1	50
2	75
3	100
4	125

Secondary side (magnet)

Notes: 1. This section describes what each symbol in a model name indicates. Some combinations of symbols are not available.

Model Designation (Note 1)

●LM-F series

L M - F P 2 B - 0 6 M - __ (Primary side: coil)

Symbol	Linear servo motor model
1SS0	LM-FP2B-06M
	LM-FP2D-12M
	LM-FP2F-18M
	LM-FP4B-12M
	LM-FP4D-24M

Symbol	Maximum speed [m/s]
M	2.0

Symbol	Continuous thrust [N]	
	Natural cooling	Liquid cooling
06	300	600
12	600	1200
18	900	1800
24	1200	2400

Symbol	Length (nominal) [mm]
B	290
D	530
F	770

Symbol	Width (nominal) [mm]
2	120
4	200

Primary side (coil)

L M - F S 2 0 - 4 8 0 - __ (Secondary side: magnet)

Symbol	Linear servo motor model
1SS0	LM-FS20-480
	LM-FS20-576
	LM-FS40-480
	LM-FS40-576

Symbol	Length (nominal) [mm]
480	480
576	576

Symbol	Width (nominal) [mm]
2	120
4	200

Secondary side (magnet)

Notes: 1. This section describes what each symbol in a model name indicates. Some combinations of symbols are not available.

Model Designation (Note 1)

●LM-K2 series

L M - K 2 P 1 A - 0 1 M - __ (Primary side: coil)

Symbol	Linear servo motor model
2SS1	LM-K2P1A-01M
	LM-K2P1C-03M
1SS1	LM-K2P2A-02M
	LM-K2P2C-07M
	LM-K2P2E-12M
	LM-K2P3C-14M
	LM-K2P3E-24M

Symbol	Maximum speed [m/s]
M	2.0

Symbol	Continuous thrust [N]
01	120
02	240
03	360
07	720
12	1200
14	1440
24	2400

Symbol	Length (nominal) [mm]
A	138
C	330
E	522

Symbol	Height (nominal) [mm]
1	54
2	74.5
3	114.5

Primary side (coil)

L M - K 2 S 1 0 - 2 8 8 - __ (Secondary side: magnet)

Symbol	Linear servo motor model
2SS1	LM-K2S10-288
	LM-K2S10-384
	LM-K2S10-480
	LM-K2S10-768
1SS1	LM-K2S20-288
	LM-K2S20-384
	LM-K2S20-480
	LM-K2S20-768
	LM-K2S30-288
	LM-K2S30-384
	LM-K2S30-480
	LM-K2S30-768

Symbol	Length (nominal) [mm]
288	288
384	384
480	480
768	768

Symbol	Width (nominal) [mm]
1	46
2	61
3	101

Secondary side (magnet)

Notes: 1. This section describes what each symbol in a model name indicates. Some combinations of symbols are not available.

Model Designation (Note 1)

●LM-U2 (medium thrust) series

L M - U 2 P A B - 0 5 M - __ (Primary side: coil)

Symbol	Length (nominal) [mm]
B	130
D	250
F	370

Symbol	Width (nominal) [mm]
A	66.5
B	86.5

Symbol	Maximum speed [m/s]
M	2.0

Symbol	Continuous thrust [N]
05	50
07	75
10	100
15	150
22	225

Symbol	Linear servo motor model
0SS0	LM-U2PAB-05M
	LM-U2PAD-10M
	LM-U2PAF-15M
1SS0	LM-U2PBB-07M
	LM-U2PBD-15M
	LM-U2PBF-22M

Primary side (coil)

L M - U 2 S A 0 - 2 4 0 - __ (Secondary side: magnet)

Symbol	Width (nominal) [mm]
A	62
B	82

Symbol	Length (nominal) [mm]
240	240
300	300
420	420

Symbol	Linear servo motor model
0SS0	LM-U2SA0-240
	LM-U2SA0-300
	LM-U2SA0-420
1SS1	LM-U2SB0-240
	LM-U2SB0-300
	LM-U2SB0-420

Secondary side (magnet)

●LM-U2 (large thrust) series

L M - U 2 P 2 B - 4 0 M - __ (Primary side: coil)

Symbol	Length (nominal) [mm]
B	286
C	406
D	526

Symbol	Maximum speed [m/s]
M	2.0

Symbol	Continuous thrust [N]
40	400
60	600
80	800

Symbol	Linear servo motor model
2SS0	LM-U2P2B-40M
	LM-U2P2C-60M
	LM-U2P2D-80M

Primary side (coil)

L M - U 2 S 2 0 - 3 0 0 - __ (Secondary side: magnet)

Symbol	Length (nominal) [mm]
300	300
480	480

Symbol	Linear servo motor model
2SS1	LM-U2S20-300
	LM-U2S20-480

Secondary side (magnet)

Notes: 1. This section describes what each symbol in a model name indicates. Some combinations of symbols are not available.

Model Designation (Note 1)

●LM-AU series

L M - A U P 3 A - 0 3 V - __ (Primary side: coil)

Symbol	Linear servo motor model
JSS0	LM-AUP3A-03V
	LM-AUP3B-06V
	LM-AUP3C-09V
	LM-AUP3D-11R
	LM-AUP4A-04R
	LM-AUP4B-09R
	LM-AUP4C-13P
	LM-AUP4D-18M
	LM-AUP4F-26P
	LM-AUP4H-35M

Symbol	Maximum speed [m/s]
M	2.0
P	3.0
R	3.5
V	4.5

Symbol	Continuous thrust [N]
03	28
04	44
06	57
09 (Note 2)	85
	88
11	113
13	132
18	176
26	264
35	350

Symbol	Length (nominal) [mm]
A	61
B	121
C	181
D	241
F	361
H	481

Symbol	Width (nominal) [mm]
3	58.9
4	79.2

Primary side (coil)

L M - A U S 3 0 - 1 2 0 - __ (Secondary side: magnet)

Symbol	Linear servo motor model
JSS0	LM-AUS30-120
	LM-AUS30-180
	LM-AUS30-240
	LM-AUS30-300
	LM-AUS30-600
	LM-AUS40-120
	LM-AUS40-180
	LM-AUS40-240
	LM-AUS40-300
	LM-AUS40-600

Symbol	Length (nominal) [mm]
120	120
180	180
240	240
300	300
600	600

Symbol	Width (nominal) [mm]
3	50.8
4	76.2

Secondary side (magnet)

Notes: 1. This section describes what each symbol in a model name indicates. Some combinations of symbols are not available.
2. The continuous thrust for LM-AUP3C-09V-JSS0 is 85 N.
The continuous thrust for LM-AUP4B-09R-JSS0 is 88 N.

LM-H3 Series Specifications

Linear servo motor model Primary side (coil)	LM-H3	P2A-07P-BSS0	P3A-12P-CSS0	P3B-24P-CSS0	P3C-36P-CSS0	P3D-48P-CSS0	P7A-24P-ASS0	P7B-48P-ASS0	P7C-72P-ASS0	P7D-96P-ASS0
Linear servo motor model Secondary side (magnet)	LM-H3	S20-288-BSS0 S20-384-BSS0 S20-480-BSS0 S20-768-BSS0	S30-288-CSS0 S30-384-CSS0 S30-480-CSS0 S30-768-CSS0				S70-288-ASS0 S70-384-ASS0 S70-480-ASS0 S70-768-ASS0			
Cooling method		Natural cooling								
Thrust	Continuous (Note 2) [N]	70	120	240	360	480	240	480	720	960
	Maximum [N]	175	300	600	900	1200	600	1200	1800	2400
Maximum speed (Note 1) [m/s]		3.0								
Magnetic attraction force [N]		630	1100	2200	3300	4400	2200	4400	6600	8800
Rated current [A]		1.8	1.7	3.4	5.1	6.8	3.4	6.8	10.2	13.6
Maximum current [A]		5.8	5.0	9.9	14.9	19.8	9.6	19.1	28.6	38.1
Recommended load to motor mass ratio (Note 3)		35 times or less								
Type		Permanent magnet synchronous motor								
Thermistor		Built-in								
Insulation class		155 (F)								
Structure		Open (IP rating: IP00)								
Vibration resistance [m/s^2]		49								
Mass	Primary side (coil) [kg]	0.9	1.3	2.3	3.3	4.3	2.2	3.9	5.6	7.3
	Secondary side (magnet) [kg]	288 mm/pc: 0.7 384 mm/pc: 0.9 480 mm/pc: 1.1 768 mm/pc: 1.8	288 mm/pc: 1.0 384 mm/pc: 1.4 480 mm/pc: 1.7 768 mm/pc: 2.7				288 mm/pc: 2.8 384 mm/pc: 3.7 480 mm/pc: 4.7 768 mm/pc: 7.4			

Notes: 1. The maximum speed of the linear servo motor or the rated speed of the linear encoder, whichever is smaller, is the upper limit of the linear servo motor speed.
2. Use the linear servo motor at 70 % or less of the effective load ratio when it is in the servo lock state or in a small reciprocating motion.
3. This is the ratio of the load to the linear servo motor primary side mass. Contact your local sales office if the load to motor mass ratio exceeds the value in the table.

LM-H3 Series Thrust Characteristics

LM-H3P2A-07P-BSS0 (Note 1, 2, 3)

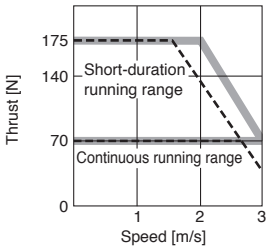

LM-H3P3A-12P-CSS0 (Note 1, 2, 3)

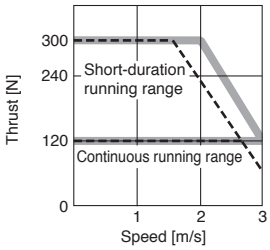

LM-H3P3B-24P-CSS0 (Note 1, 2, 3)

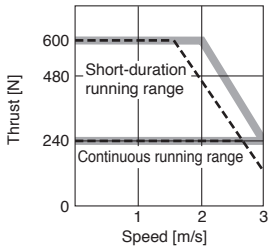

LM-H3P3C-36P-CSS0 (Note 1, 2, 3)

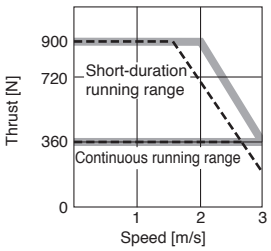

LM-H3P3D-48P-CSS0 (Note 1, 2, 3)

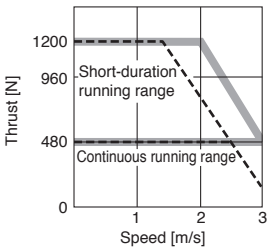

LM-H3P7A-24P-ASS0 (Note 1, 2, 3)

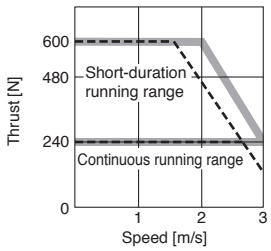

LM-H3P7B-48P-ASS0 (Note 1, 2, 3)

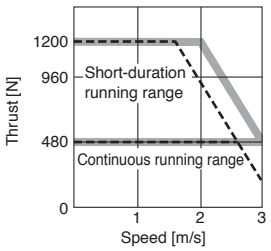

LM-H3P7C-72P-ASS0 (Note 1, 2, 3)

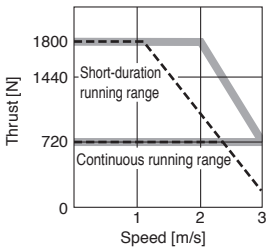

LM-H3P7D-96P-ASS0 (Note 1, 3)

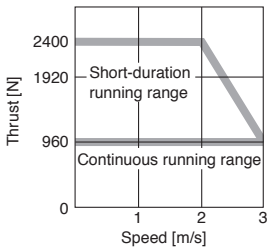

Notes: 1. ▬ : For 3-phase 200 V AC
2. - - - - : For 1-phase 200 V AC
3. Thrust drops when the power supply voltage is below the specified value.

LM-AJ Series Specifications

Linear servo motor model Primary side (coil)	LM-AJ	P1B-07K-JSS0	P1D-14K-JSS0	P2B-12S-JSS0	P2D-23T-JSS0	P3B-17N-JSS0	P3D-35R-JSS0	P4B-22M-JSS0	P4D-45N-JSS0
Linear servo motor model Secondary side (magnet)	LM-AJ	S10-080-JSS0 S10-200-JSS0 S10-400-JSS0		S20-080-JSS0 S20-200-JSS0 S20-400-JSS0		S30-080-JSS0 S30-200-JSS0 S30-400-JSS0		S40-080-JSS0 S40-200-JSS0 S40-400-JSS0	
Cooling method		Natural cooling							
Thrust	Continuous (Note 2) [N]	68.1	136.2	117.0	234.0	174.5	348.9	223.4	446.8
	Maximum [N]	214.7	429.4	369.0	738.1	550.2	1100.4	704.5	1409.1
Maximum speed (Note 1) [m/s]		6.5		4.0	5.0	2.5	3.5	2.0	2.5
Magnetic attraction force [N]		378.8	757.6	651.1	1302.1	970.7	1941.4	1242.9	2485.9
Rated current [A]		2.3	4.6	2.3	4.6	2.3	4.6	2.3	4.6
Maximum current [A]		9.0	18.0	9.0	18.0	9.0	18.0	9.0	18.0
Recommended load to motor mass ratio (Note 3)		10 times or less	25 times or less	20 times or less	25 times or less	30 times or less			
Type		Permanent magnet synchronous motor							
Thermistor		None							
Thermal protector		Built-in							
Insulation class		105 (A)							
Structure		Open (IP rating: IP00)							
Vibration resistance [m/s^2]		49							
Mass	Primary side (coil) [kg]	0.6	1.1	0.9	1.7	1.2	2.3	1.5	2.9
	Secondary side (magnet) [kg]	80 mm/pc: 0.26 200 mm/pc: 0.65 400 mm/pc: 1.30		80 mm/pc: 0.40 200 mm/pc: 1.00 400 mm/pc: 2.00		80 mm/pc: 0.56 200 mm/pc: 1.40 400 mm/pc: 2.80		80 mm/pc: 0.70 200 mm/pc: 1.70 400 mm/pc: 3.50	

Notes: 1. The maximum speed of the linear servo motor or the rated speed of the linear encoder, whichever is smaller, is the upper limit of the linear servo motor speed.
2. Use the linear servo motor at 70 % or less of the effective load ratio when it is in the servo lock state or in a small reciprocating motion.
3. This is the ratio of the load to the linear servo motor primary side mass. Contact your local sales office if the load to motor mass ratio exceeds the value in the table.

LM-AJ Series Thrust Characteristics

LM-AJP1B-07K-JSS0 (Note 1, 2, 3)

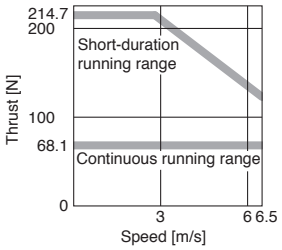

LM-AJP1D-14K-JSS0 (Note 1, 2, 3)

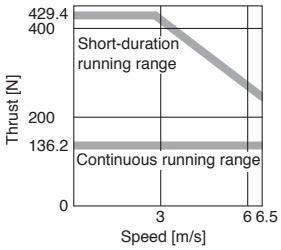

LM-AJP2B-12S-JSS0 (Note 1, 2, 3)

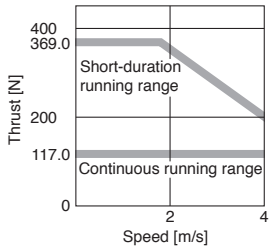

LM-AJP2D-23T-JSS0 (Note 1, 2, 3)

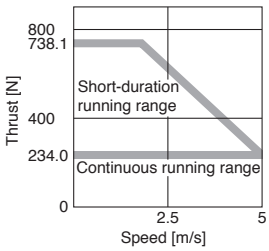

LM-AJP3B-17N-JSS0 (Note 1, 2, 3)

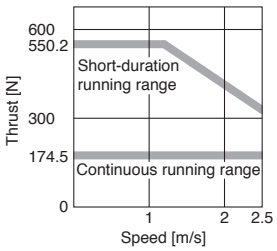

LM-AJP3D-35R-JSS0 (Note 1, 2, 3)

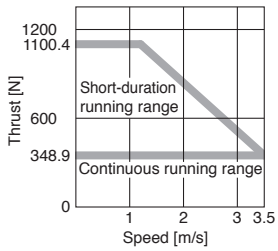

LM-AJP4B-22M-JSS0 (Note 1, 2, 3)

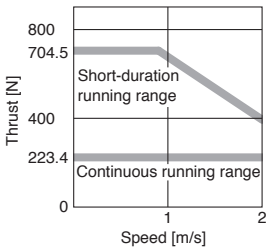

LM-AJP4D-45N-JSS0 (Note 1, 2, 3)

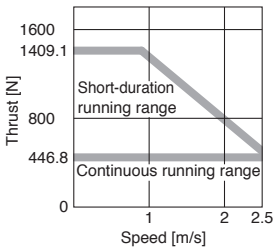

Notes: 1. ▬ : For 3-phase 200 V AC
2. Contact your local sales office for the thrust characteristics for 1-phase 200 V AC.
3. Thrust drops when the power supply voltage is below the specified value.

LM-F Series Specifications

Linear servo motor model Primary side (coil)		LM-F	P2B-06M-1SS0	P2D-12M-1SS0	P2F-18M-1SS0	P4B-12M-1SS0	P4D-24M-1SS0
Linear servo motor model Secondary side (magnet)		LM-F	S20-480-1SS0 S20-576-1SS0			S40-480-1SS0 S40-576-1SS0	
Cooling method			Natural cooling or liquid cooling				
Thrust	Continuous (natural cooling) (Note 2)	[N]	300	600	900	600	1200
	Continuous (liquid cooling) (Note 2)	[N]	600	1200	1800	1200	2400
	Maximum	[N]	1800	3600	5400	3600	7200
Maximum speed (Note 1)		[m/s]	2.0				
Magnetic attraction force		[N]	4500	9000	13500	9000	18000
Rated current	Natural cooling	[A]	4.0	7.8	12	7.8	15
	Liquid cooling	[A]	7.8	16	23	17	31
Maximum current		[A]	30	58	87	57	109
Recommended load to motor mass ratio (Note 3)			15 times or less				
Type			Permanent magnet synchronous motor				
Thermistor			Built-in				
Insulation class			155 (F)				
Structure			Open (IP rating: IP00)				
Vibration resistance		[m/s^2]	49				
Mass	Primary side (coil)	[kg]	9.0	18	27	14	28
	Secondary side (magnet)	[kg]	480 mm/pc: 7.0 576 mm/pc: 9.0			480 mm/pc: 12 576 mm/pc: 15	

Notes: 1. The maximum speed of the linear servo motor or the rated speed of the linear encoder, whichever is smaller, is the upper limit of the linear servo motor speed.
2. Use the linear servo motor at 70 % or less of the effective load ratio when it is in the servo lock state or in a small reciprocating motion.
3. This is the ratio of the load to the linear servo motor primary side mass. Contact your local sales office if the load to motor mass ratio exceeds the value in the table.

LM-F Series Thrust Characteristics

LM-FP2B-06M-1SS0 (Note 1, 2, 3)

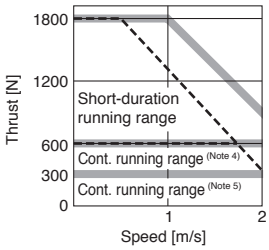

LM-FP2D-12M-1SS0 (Note 1, 3)

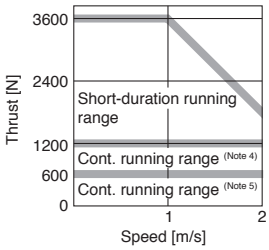

LM-FP2F-18M-1SS0 (Note 1, 3)

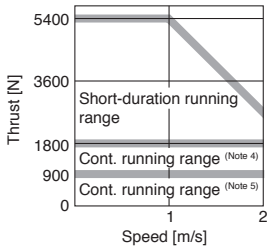

LM-FP4B-12M-1SS0 (Note 1, 3)

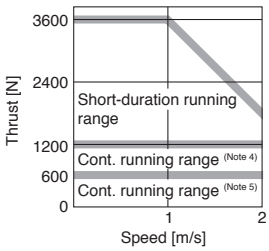

LM-FP4D-24M-1SS0 (Note 1, 3)

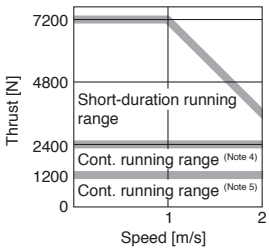

Notes: 1. ▬ : For 3-phase 200 V AC
2. - - - - : For 1-phase 200 V AC
3. Thrust drops when the power supply voltage is below the specified value.
4. Continuous running range (liquid cooling)
5. Continuous running range (natural cooling)

LM-K2 Series Specifications

Linear servo motor model Primary side (coil)	LM-K2	P1A-01M-2SS1	P1C-03M-2SS1	P2A-02M-1SS1	P2C-07M-1SS1	P2E-12M-1SS1	P3C-14M-1SS1	P3E-24M-1SS1
Linear servo motor model Secondary side (magnet) (Note 2)	LM-K2	S10-288-2SS1 S10-384-2SS1 S10-480-2SS1 S10-768-2SS1		S20-288-1SS1 S20-384-1SS1 S20-480-1SS1 S20-768-1SS1			S30-288-1SS1 S30-384-1SS1 S30-480-1SS1 S30-768-1SS1	
Cooling method		Natural cooling						
Thrust	Continuous (Note 3) [N]	120	360	240	720	1200	1440	2400
	Maximum [N]	300	900	600	1800	3000	3600	6000
Maximum speed (Note 1) [m/s]		2.0						
Magnetic attraction force (Note 4) [N]		0						
Magnetic attraction force (one side) (Note 5) [N]		800	2400	1100	3200	5300	6400	10700
Rated current [A]		2.3	6.8	3.7	12	19	15	25
Maximum current [A]		7.6	23	13	39	65	47	79
Recommended load to motor mass ratio (Note 6)		30 times or less						
Type		Permanent magnet synchronous motor						
Thermistor		Built-in						
Insulation class		155 (F)						
Structure		Open (IP rating: IP00)						
Vibration resistance [m/s^2]		49						
Mass	Primary side (coil) [kg]	2.5	6.5	4.0	10	16	18	27
	Secondary side (magnet) [kg]	288 mm/pc: 1.5 384 mm/pc: 2.0 480 mm/pc: 2.5 768 mm/pc: 3.9		288 mm/pc: 1.9 384 mm/pc: 2.5 480 mm/pc: 3.2 768 mm/pc: 5.0			288 mm/pc: 5.5 384 mm/pc: 7.3 480 mm/pc: 9.2 768 mm/pc: 14.6	

Notes: 1. The maximum speed of the linear servo motor or the rated speed of the linear encoder, whichever is smaller, is the upper limit of the linear servo motor speed.
2. LM-K2 series has a structure of magnetic attraction counter-force and requires at least two blocks of identical secondary side (magnet).
3. Use the linear servo motor at 70 % or less of the effective load ratio when it is in the servo lock state or in a small reciprocating motion.
4. Magnetic attraction force is caused by assembly precision, etc.
5. Magnetic attraction force which occurs on one side of the secondary side is shown.
6. This is the ratio of the load to the linear servo motor primary side mass. Contact your local sales office if the load to motor mass ratio exceeds the value in the table.

LM-K2 Series Thrust Characteristics

LM-K2P1A-01M-2SS1 (Note 1, 4)

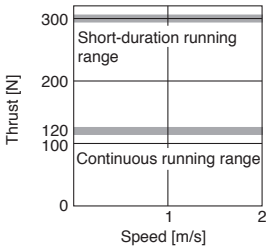

LM-K2P1C-03M-2SS1 (Note 2, 3, 4)

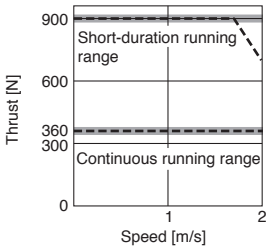

LM-K2P2A-02M-1SS1 (Note 1, 4)

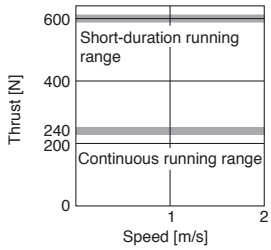

LM-K2P2C-07M-1SS1 (Note 2, 4)

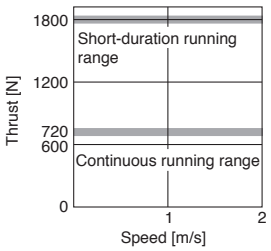

LM-K2P2E-12M-1SS1 (Note 2, 4)

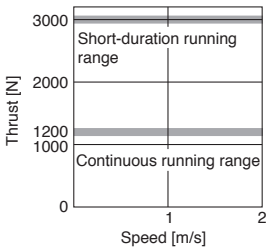

LM-K2P3C-14M-1SS1 (Note 2, 4)

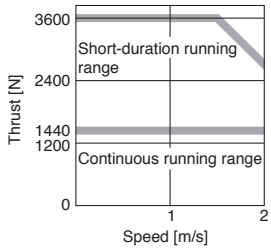

LM-K2P3E-24M-1SS1 (Note 2, 4)

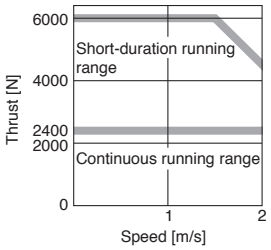

Notes: 1. ▬ : For 3-phase 200 V AC or 1-phase 200 V AC
2. ▬ : For 3-phase 200 V AC
3. - - - - : For 1-phase 200 V AC
4. Thrust drops when the power supply voltage is below the specified value.

LM-U2 Series Specifications

Linear servo motor model Primary side (coil)		LM-U2	PAB-05M-0SS0	PAD-10M-0SS0	PAF-15M-0SS0	PBB-07M-1SS0	PBD-15M-1SS0	PBF-22M-1SS0	P2B-40M-2SS0	P2C-60M-2SS0	P2D-80M-2SS0
Linear servo motor model Secondary side (magnet)		LM-U2	SA0-240-0SS0 SA0-300-0SS0 SA0-420-0SS0			SB0-240-1SS1 SB0-300-1SS1 SB0-420-1SS1			S20-300-2SS1 S20-480-2SS1		
Cooling method			Natural cooling								
Thrust	Continuous (Note 2)	[N]	50	100	150	75	150	225	400	600	800
	Maximum	[N]	150	300	450	225	450	675	1600	2400	3200
Maximum speed (Note 1)		[m/s]	2.0								
Magnetic attraction force		[N]	0								
Rated current		[A]	0.9	1.9	2.7	1.5	3.0	4.6	6.6	9.8	13.1
Maximum current		[A]	2.7	5.5	8.3	4.5	8.9	13.7	26.7	40.3	53.7
Recommended load to motor mass ratio (Note 3)			30 times or less								
Type			Permanent magnet synchronous motor								
Thermistor			Built-in								
Insulation class			155 (F)								
Structure			Open (IP rating: IP00)								
Vibration resistance		[m/s^2]	49								
Mass	Primary side (coil)	[kg]	0.3	0.6	0.8	0.4	0.8	1.1	2.9	4.2	5.5
	Secondary side (magnet)	[kg]	240 mm/pc: 2.0 300 mm/pc: 2.5 420 mm/pc: 3.5			240 mm/pc: 2.6 300 mm/pc: 3.2 420 mm/pc: 4.5			300 mm/pc: 9.6 480 mm/pc: 15.3		

Notes: 1. The maximum speed of the linear servo motor or the rated speed of the linear encoder, whichever is smaller, is the upper limit of the linear servo motor speed.
2. Use the linear servo motor at 70 % or less of the effective load ratio when it is in the servo lock state or in a small reciprocating motion.
3. This is the ratio of the load to the linear servo motor primary side mass. Contact your local sales office if the load to motor mass ratio exceeds the value in the table.

LM-U2 Series Thrust Characteristics

LM-U2PAB-05M-0SS0 (Note 1, 4)

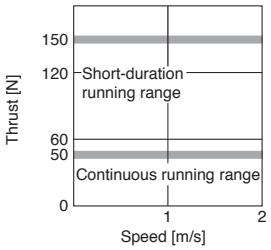

LM-U2PAD-10M-0SS0 (Note 1, 4)

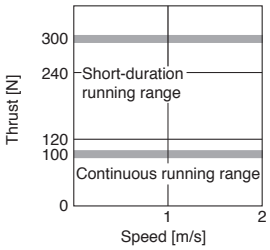

LM-U2PAF-15M-0SS0 (Note 1, 4)

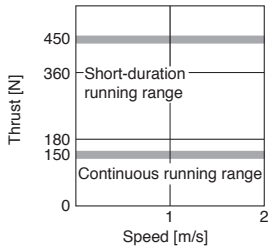

LM-U2PBB-07M-1SS0 (Note 1, 4)

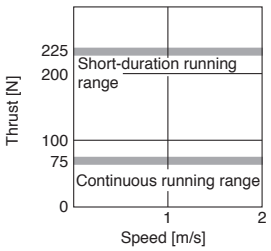

LM-U2PBD-15M-1SS0 (Note 1, 4)

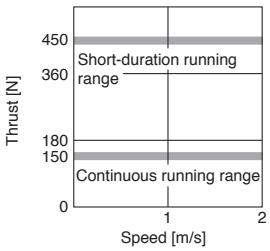

LM-U2PBF-22M-1SS0 (Note 1, 4)

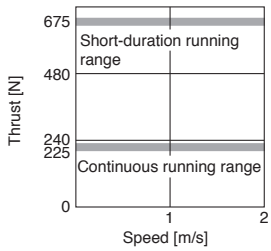

LM-U2P2B-40M-2SS0 (Note 2, 3, 4)

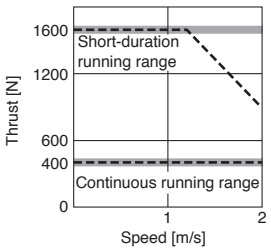

LM-U2P2C-60M-2SS0 (Note 2, 4)

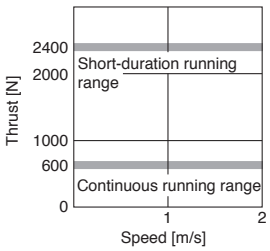

LM-U2P2D-80M-2SS0 (Note 2, 4)

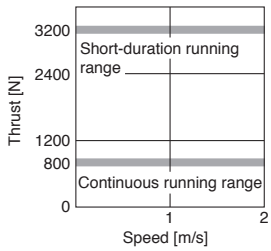

Notes: 1. ▬ : For 3-phase 200 V AC or 1-phase 200 V AC
2. ▬ : For 3-phase 200 V AC
3. - - - : For 1-phase 200 V AC
4. Thrust drops when the power supply voltage is below the specified value.

LM-AU Series Specifications

Linear servo motor model Primary side (coil)		LM-AU	P3A-03V-JSS0	P3B-06V-JSS0	P3C-09V-JSS0	P3D-11R-JSS0
Linear servo motor model Secondary side (magnet)		LM-AU	S30-120-JSS0 S30-180-JSS0 S30-240-JSS0 S30-300-JSS0 S30-600-JSS0			
Cooling method			Natural cooling			
Thrust	Continuous (Note 2)	[N]	28	57	85	113
	Maximum	[N]	122	274	411	549
Maximum speed (Note 1)		[m/s]	4.5			3.5
Magnetic attraction force		[N]	0			
Rated current		[A]	1.8			
Maximum current		[A]	9.2			
Recommended load to motor mass ratio (Note 3)			35 times or less		25 times or less	20 times or less
Type			Permanent magnet synchronous motor			
Thermistor			None			
Thermal protector			Built-in			
Insulation class			105 (A)			
Structure			Open (IP rating: IP00)			
Vibration resistance		[m/s^2]	49			
Mass	Primary side (coil)	[kg]	0.22	0.45	0.68	0.91
	Secondary side (magnet)	[kg]	120 mm/pc: 1.0 180 mm/pc: 1.5 240 mm/pc: 2.0 300 mm/pc: 2.5 600 mm/pc: 5.0			

Linear servo motor model Primary side (coil)		LM-AU	P4A-04R-JSS0	P4B-09R-JSS0	P4C-13P-JSS0	P4D-18M-JSS0	P4F-26P-JSS0	P4H-35M-JSS0
Linear servo motor model Secondary side (magnet)		LM-AU	S40-120-JSS0 S40-180-JSS0 S40-240-JSS0 S40-300-JSS0 S40-600-JSS0					
Cooling method			Natural cooling					
Thrust	Continuous (Note 2)	[N]	44	88	132	176	264	350
	Maximum	[N]	280	561	842	970	1684	1764
Maximum speed (Note 1)		[m/s]	3.5		3.0	2.0	3.0	2.0
Magnetic attraction force		[N]	0					
Rated current		[A]	1.9				3.7	
Maximum current		[A]	13.0				26.0	
Recommended load to motor mass ratio (Note 3)			35 times or less					
Type			Permanent magnet synchronous motor					
Thermistor			None					
Thermal protector			Built-in					
Insulation class			105 (A)					
Structure			Open (IP rating: IP00)					
Vibration resistance		[m/s^2]	49					
Mass	Primary side (coil)	[kg]	0.28	0.56	0.89	1.2	1.8	2.4
	Secondary side (magnet)	[kg]	120 mm/pc: 1.8 180 mm/pc: 2.7 240 mm/pc: 3.6 300 mm/pc: 4.5 600 mm/pc: 8.9					

Notes: 1. The maximum speed of the linear servo motor or the rated speed of the linear encoder, whichever is smaller, is the upper limit of the linear servo motor speed.
2. Use the linear servo motor at 70 % or less of the effective load ratio when it is in the servo lock state or in a small reciprocating motion.
3. This is the ratio of the load to the linear servo motor primary side mass. Contact your local sales office if the load to motor mass ratio exceeds the value in the table.

LM-AU Series Thrust Characteristics

LM-AUP3A-03V-JSS0 (Note 1, 2, 3)

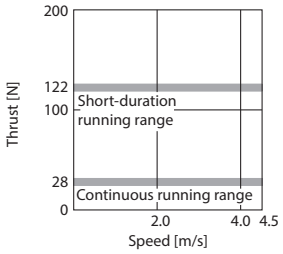

LM-AUP3B-06V-JSS0 (Note 1, 2, 3)

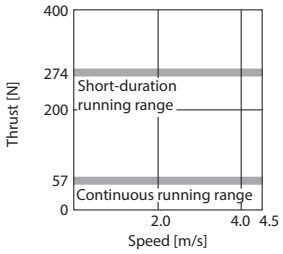

LM-AUP3C-09V-JSS0 (Note 1, 2, 3)

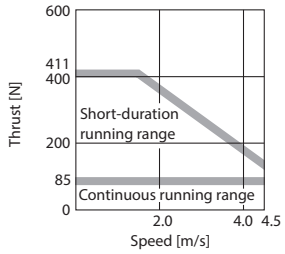

LM-AUP3D-11R-JSS0 (Note 1, 2, 3)

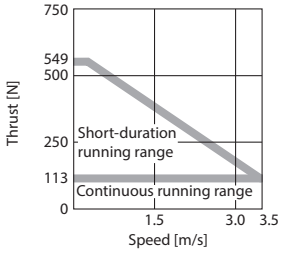

LM-AUP4A-04R-JSS0 (Note 1, 2, 3)

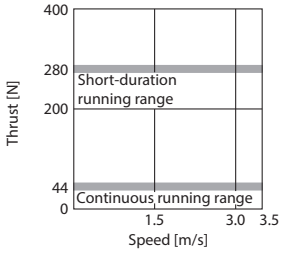

LM-AUP4B-09R-JSS0 (Note 1, 2, 3)

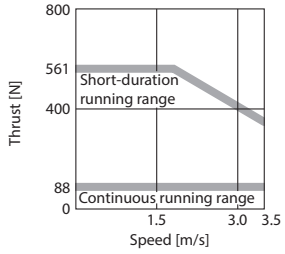

LM-AUP4C-13P-JSS0 (Note 1, 2, 3)

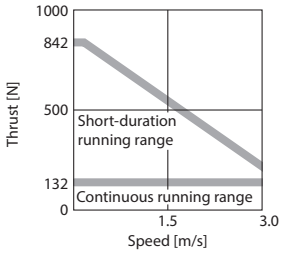

LM-AUP4D-18M-JSS0 (Note 1, 2, 3)

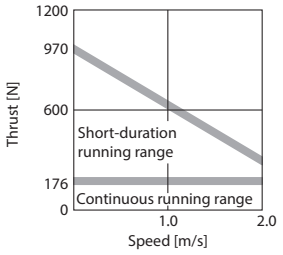

LM-AUP4F-26P-JSS0 (Note 1, 2, 3)

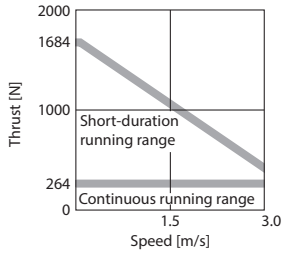

LM-AUP4H-35M-JSS0 (Note 1, 2, 3)

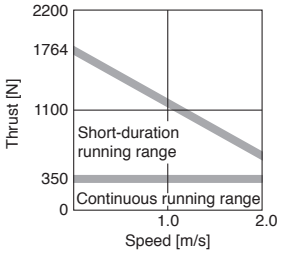

Notes: 1. ▬ : For 3-phase 200 V AC
2. Contact your local sales office for the thrust characteristics for 1-phase 200 V AC.
3. Thrust drops when the power supply voltage is below the specified value.

Power Supply Capacity

The power supply capacity of a servo amplifier is the same when used with either a 3-phase power supply input or a 1-phase power supply input.
When the servo motor runs at less than the rated speed, the power supply capacity is smaller than the value in the table.

Linear servo motors (primary side)		Servo amplifier (Note 3)	Power supply capacity [kVA] (Note 1, 2)
LM-H3 series	LM-H3P2A-07P-BSS0	MR-J5-40G/B/A MR-J5W2-44G/B, MR-J5W2-77G/B MR-J5W2-1010G/B MR-J5W3-444G/B	0.9
	LM-H3P3A-12P-CSS0		
	LM-H3P3B-24P-CSS0	MR-J5-70G/B/A MR-J5W2-77G/B, MR-J5W2-1010G/B	1.3
	LM-H3P3C-36P-CSS0		1.9
	LM-H3P3D-48P-CSS0	MR-J5-200G/B/A	3.5
	LM-H3P7A-24P-ASS0	MR-J5-70G/B/A MR-J5W2-77G/B, MR-J5W2-1010G/B	1.3
	LM-H3P7B-48P-ASS0	MR-J5-200G/B/A	3.5
	LM-H3P7C-72P-ASS0		3.8
	LM-H3P7D-96P-ASS0	MR-J5-350G/B/A	5.5
LM-AJ series	LM-AJP1B-07K-JSS0	MR-J5-40G/A MR-J5W2-44G, MR-J5W2-77G MR-J5W2-1010G MR-J5W3-444G	0.9
	LM-AJP1D-14K-JSS0	MR-J5-70G/A MR-J5W2-77G, MR-J5W2-1010G	1.3
	LM-AJP2B-12S-JSS0	MR-J5-40G/A MR-J5W2-44G, MR-J5W2-77G MR-J5W2-1010G MR-J5W3-444G	0.9
	LM-AJP2D-23T-JSS0	MR-J5-70G/A MR-J5W2-77G, MR-J5W2-1010G	1.3
	LM-AJP3B-17N-JSS0	MR-J5-40G/A MR-J5W2-44G, MR-J5W2-77G MR-J5W2-1010G MR-J5W3-444G	0.9
	LM-AJP3D-35R-JSS0	MR-J5-70G/A MR-J5W2-77G, MR-J5W2-1010G	1.3
	LM-AJP4B-22M-JSS0	MR-J5-40G/A MR-J5W2-44G, MR-J5W2-77G MR-J5W2-1010G MR-J5W3-444G	0.9
	LM-AJP4D-45N-JSS0	MR-J5-70G/A MR-J5W2-77G, MR-J5W2-1010G	1.3

Notes: 1. The power supply capacity varies depending on the power supply impedance.
2. The listed values are the power supply capacity for one servo motor. For the multi-axis servo amplifiers, calculate the power supply capacity with the equation below:
Power supply capacity [kVA] = Sum of power supply capacity [kVA] of the connected servo motors
3. Note that the power supply capacity for servo amplifiers with special specifications is the same as that for standard servo amplifiers. Refer to the servo amplifiers with the same rated output.

Power Supply Capacity

The power supply capacity of a servo amplifier is the same when used with either a 3-phase power supply input or a 1-phase power supply input.
When the servo motor runs at less than the rated speed, the power supply capacity is smaller than the value in the table.

Linear servo motors (primary side)		Servo amplifier (Note 3)	Power supply capacity [kVA] (Note 1, 2)
LM-F series	LM-FP2B-06M-1SS0	MR-J5-200G/B/A	3.5
	LM-FP2D-12M-1SS0	MR-J5-500G/B/A	7.5
	LM-FP2F-18M-1SS0	MR-J5-700G/B/A	10
	LM-FP4B-12M-1SS0	MR-J5-500G/B/A	7.5
	LM-FP4D-24M-1SS0	MR-J5-700G/B/A	10
LM-K2 series	LM-K2P1A-01M-2SS1	MR-J5-40G/B/A MR-J5W2-44G/B, MR-J5W2-77G/B MR-J5W2-1010G/B MR-J5W3-444G/B	0.9
	LM-K2P1C-03M-2SS1	MR-J5-200G/B/A	3.5
	LM-K2P2A-02M-1SS1	MR-J5-70G/B/A MR-J5W2-77G/B, MR-J5W2-1010G/B	1.3
	LM-K2P2C-07M-1SS1	MR-J5-350G/B/A	5.5
	LM-K2P2E-12M-1SS1	MR-J5-500G/B/A	7.5
	LM-K2P3C-14M-1SS1	MR-J5-350G/B/A	5.5
	LM-K2P3E-24M-1SS1	MR-J5-500G/B/A	7.5
LM-U2 series	LM-U2PAB-05M-0SS0	MR-J5-20G/B/A MR-J5W2-22G/B, MR-J5W2-44G/B MR-J5W3-222G/B, MR-J5W3-444G/B	0.5
	LM-U2PAD-10M-0SS0	MR-J5-40G/B/A MR-J5W2-44G/B, MR-J5W2-77G/B MR-J5W2-1010G/B MR-J5W3-444G/B	0.9
	LM-U2PAF-15M-0SS0		
	LM-U2PBB-07M-1SS0	MR-J5-20G/B/A MR-J5W2-22G/B, MR-J5W2-44G/B MR-J5W3-222G/B, MR-J5W3-444G/B	0.5
	LM-U2PBD-15M-1SS0	MR-J5-60G/B/A MR-J5W2-77G/B, MR-J5W2-1010G/B	1.0
	LM-U2PBF-22M-1SS0	MR-J5-70G/B/A MR-J5W2-77G/B, MR-J5W2-1010G/B	1.3
	LM-U2P2B-40M-2SS0	MR-J5-200G/B/A	3.5
	LM-U2P2C-60M-2SS0	MR-J5-350G/B/A	5.5
	LM-U2P2D-80M-2SS0	MR-J5-500G/B/A	7.5
LM-AU series	LM-AUP3A-03V-JSS0	MR-J5-40G/A MR-J5W2-44G, MR-J5W2-77G MR-J5W2-1010G MR-J5W3-444G	0.9
	LM-AUP3B-06V-JSS0		
	LM-AUP3C-09V-JSS0		
	LM-AUP3D-11R-JSS0		1.2
	LM-AUP4A-04R-JSS0	MR-J5-70G/A MR-J5W2-77G, MR-J5W2-1010G	1.3
	LM-AUP4B-09R-JSS0		
	LM-AUP4C-13P-JSS0		
	LM-AUP4D-18M-JSS0		
	LM-AUP4F-26P-JSS0	MR-J5-200G/A	3.5
	LM-AUP4H-35M-JSS0		

Notes: 1. The power supply capacity varies depending on the power supply impedance.
2. The listed values are the power supply capacity for one servo motor. For the multi-axis servo amplifiers, calculate the power supply capacity with the equation below:
Power supply capacity [kVA] = Sum of power supply capacity [kVA] of the connected servo motors
3. Note that the power supply capacity for servo amplifiers with special specifications is the same as that for standard servo amplifiers. Refer to the servo amplifiers with the same rated output.

LM-H3 Series Primary Side (Coil) Dimensions (Note 1, 2)

●LM-H3P2A-07P-BSS0

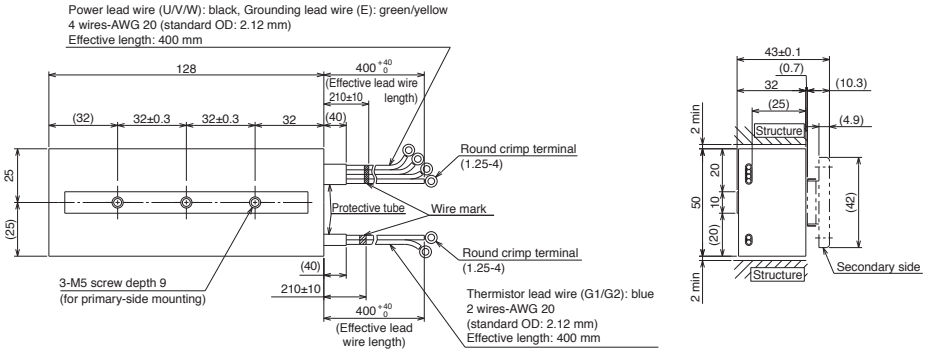

[Unit: mm]

●LM-H3P3A-12P-CSS0 ●LM-H3P3B-24P-CSS0 ●LM-H3P3C-36P-CSS0
●LM-H3P3D-48P-CSS0

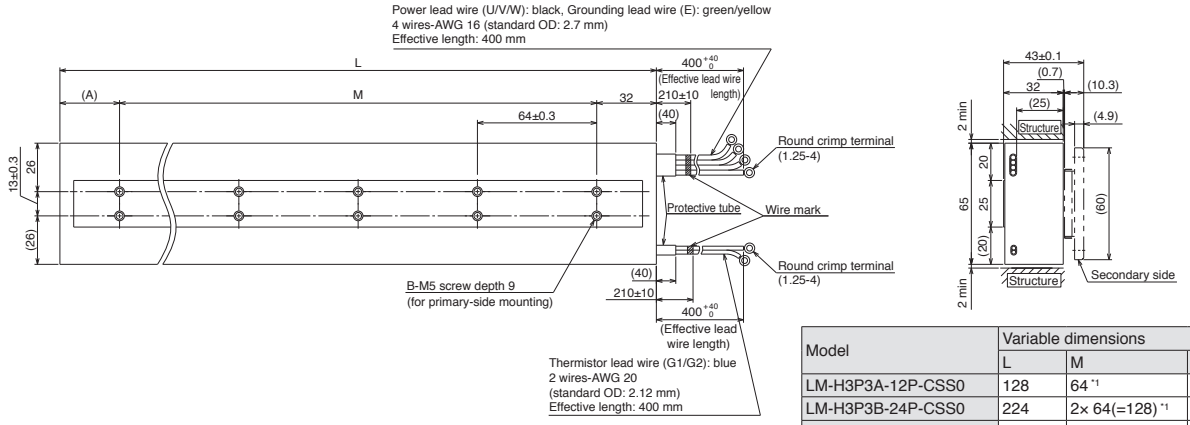

Model	Variable dimensions			
	L	M	A	B
LM-H3P3A-12P-CSS0	128	64 *1	32	4
LM-H3P3B-24P-CSS0	224	2× 64(=128) *1	64	6
LM-H3P3C-36P-CSS0	320	4× 64(=256) *1	32	10
LM-H3P3D-48P-CSS0	416	5× 64(=320) *1	64	12

*1. Pitch tolerance between holes at both ends: ±0.3 [Unit: mm]

●LM-H3P7A-24P-ASS0 ●LM-H3P7B-48P-ASS0 ●LM-H3P7C-72P-ASS0
●LM-H3P7D-96P-ASS0

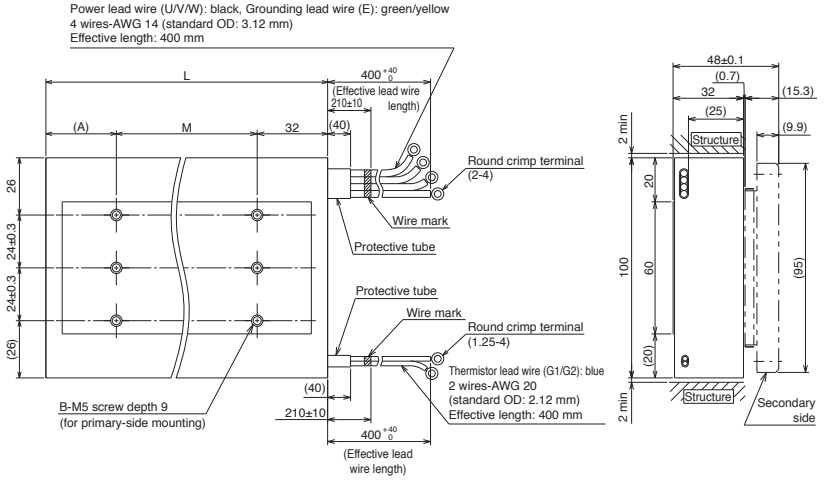

Model	Variable dimensions			
	L	M	A	B
LM-H3P7A-24P-ASS0	128	64 *1	32	6
LM-H3P7B-48P-ASS0	224	2× 64(=128) *1	64	9
LM-H3P7C-72P-ASS0	320	4× 64(=256) *1	32	15
LM-H3P7D-96P-ASS0	416	5× 64(=320) *1	64	18

*1. Pitch tolerance between holes at both ends: ±0.3 [Unit: mm]

Notes: 1. Power, grounding, and thermistor lead wires do not have a long bending life. Fix the lead wires led from the primary side (coil) to a moving part to prevent the lead wires from repetitive bending.

 2. Minimum bending radius of the lead wire equals to six times the standard overall diameter of the lead wire.

LM-H3 Series Secondary Side (Magnet) Dimensions

●LM-H3S20-288-BSS0 ●LM-H3S20-384-BSS0 ●LM-H3S20-480-BSS0
●LM-H3S20-768-BSS0

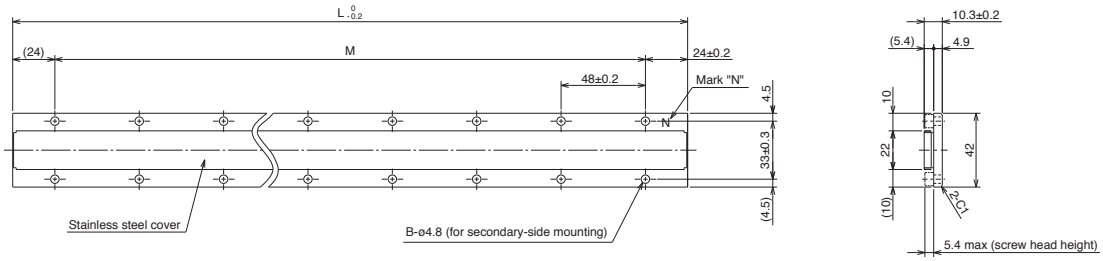

Model	Variable dimensions		
	L	M	B
LM-H3S20-288-BSS0	288	5× 48(=240) *1	12
LM-H3S20-384-BSS0	384	7× 48(=336) *1	16
LM-H3S20-480-BSS0	480	9× 48(=432) *1	20
LM-H3S20-768-BSS0	768	15× 48(=720) *1	32

*1. Pitch tolerance between holes at both ends: ±0.2 [Unit: mm]

●LM-H3S30-288-CSS0 ●LM-H3S30-384-CSS0 ●LM-H3S30-480-CSS0
●LM-H3S30-768-CSS0

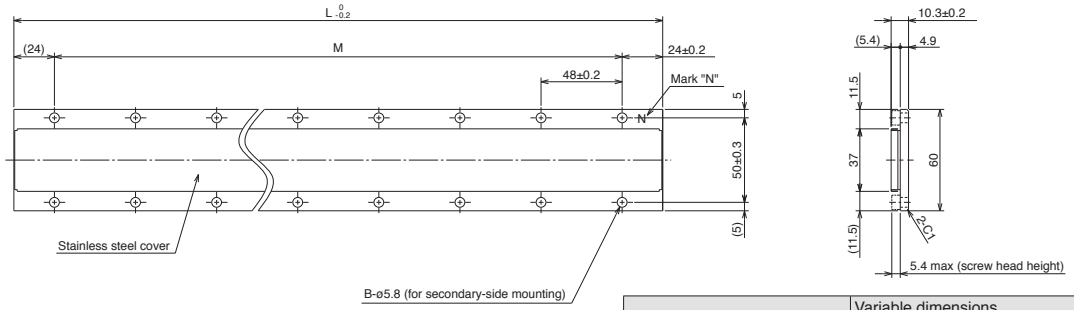

Model	Variable dimensions		
	L	M	B
LM-H3S30-288-CSS0	288	5× 48(=240) *1	12
LM-H3S30-384-CSS0	384	7× 48(=336) *1	16
LM-H3S30-480-CSS0	480	9× 48(=432) *1	20
LM-H3S30-768-CSS0	768	15× 48(=720) *1	32

*1. Pitch tolerance between holes at both ends: ±0.2 [Unit: mm]

●LM-H3S70-288-ASS0 ●LM-H3S70-384-ASS0 ●LM-H3S70-480-ASS0
●LM-H3S70-768-ASS0

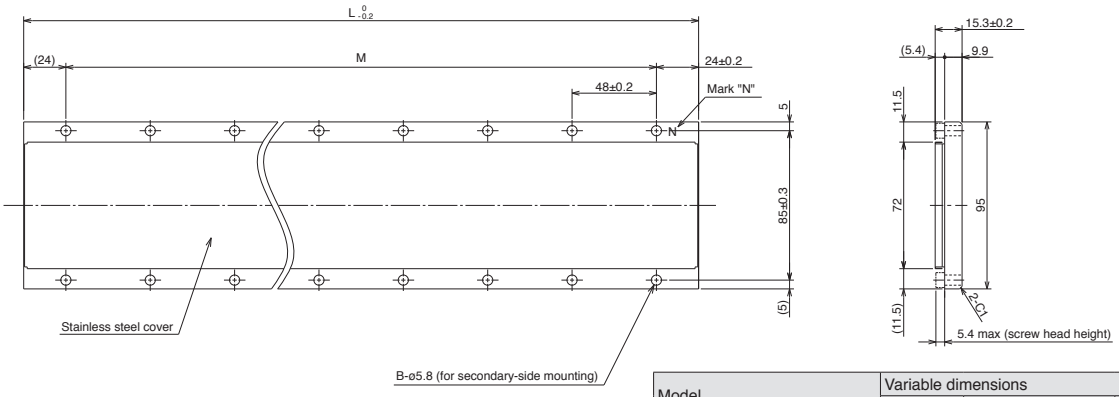

Model	Variable dimensions		
	L	M	B
LM-H3S70-288-ASS0	288	5× 48(=240) *1	12
LM-H3S70-384-ASS0	384	7× 48(=336) *1	16
LM-H3S70-480-ASS0	480	9× 48(=432) *1	20
LM-H3S70-768-ASS0	768	15× 48(=720) *1	32

*1. Pitch tolerance between holes at both ends: ±0.2 [Unit: mm]

LM-AJ Series Primary Side (Coil) Dimensions (Note 1, 2)

●LM-AJP1B-07K-JSS0

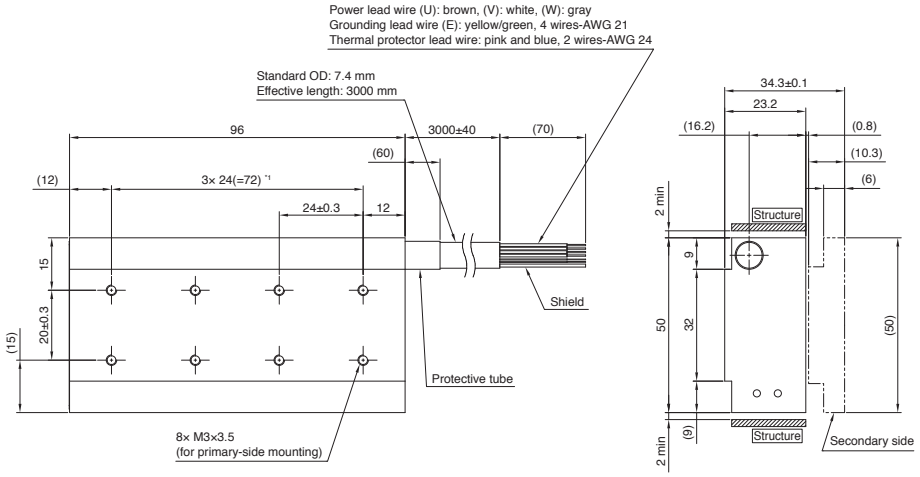

*1. Pitch tolerance between holes at both ends: ±0.3 [Unit: mm]

●LM-AJP1D-14K-JSS0

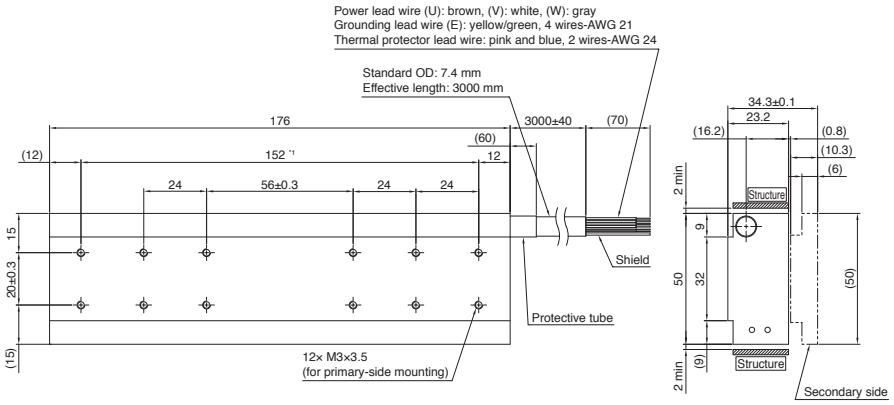

*1. Pitch tolerance between holes at both ends: ±0.3 [Unit: mm]

LM-AJ Series Secondary Side (Magnet) Dimensions

●LM-AJS10-080-JSS0 ●LM-AJS10-200-JSS0 ●LM-AJS10-400-JSS0

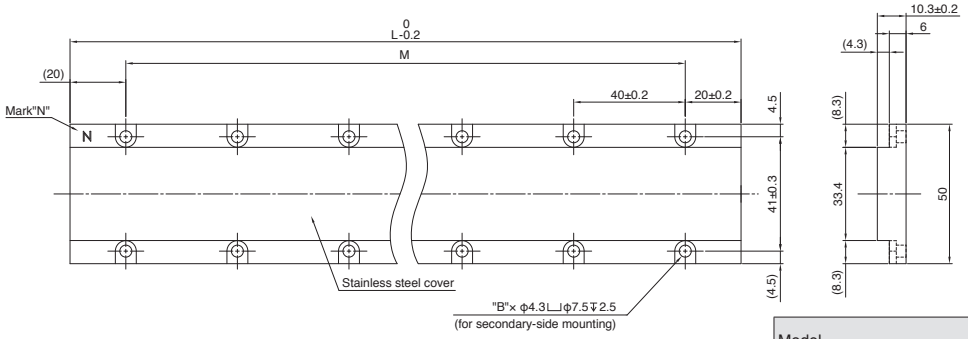

Model	Variable dimensions		
	L	M	B
LM-AJS10-080-JSS0	80	1× 40(=40) *1	4
LM-AJS10-200-JSS0	200	4× 40(=160) *1	10
LM-AJS10-400-JSS0	400	9× 40(=360) *1	20

*1. Pitch tolerance between holes at both ends: ±0.2 [Unit: mm]

Notes: 1. Power, grounding, and thermal protector lead wires do not have a long bending life. Fix the lead wires led from the primary side (coil) to a moving part to prevent the lead wires from repetitive bending.
2. Minimum bending radius of the lead wire equals to 10 times the standard overall diameter of the lead wire.

LM-AJ Series Primary Side (Coil) Dimensions (Note 1, 2)

●LM-AJP2B-12S-JSS0

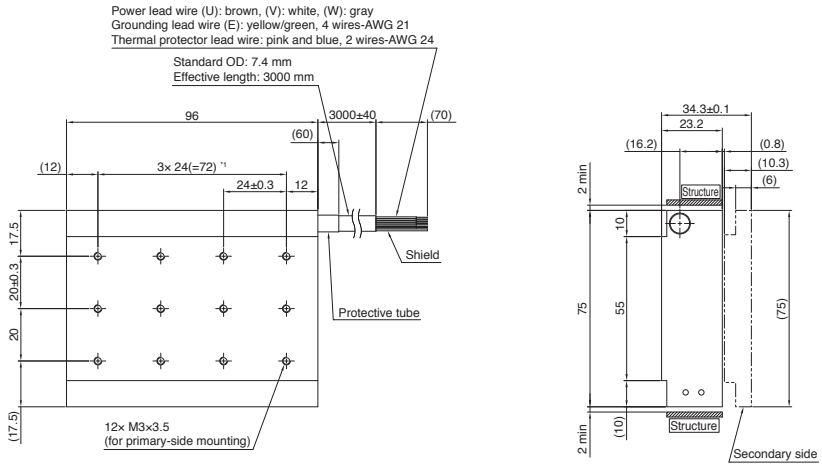

*1. Pitch tolerance between holes at both ends: ±0.3 [Unit: mm]

●LM-AJP2D-23T-JSS0

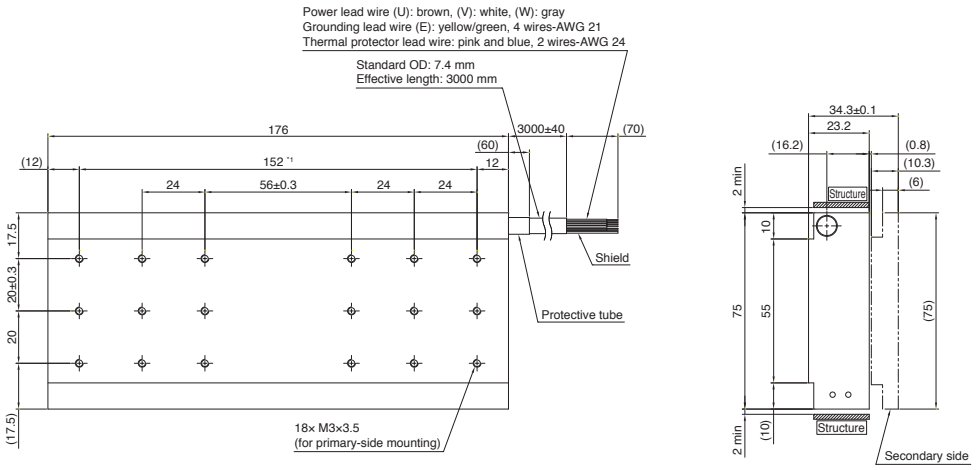

*1. Pitch tolerance between holes at both ends: ±0.3 [Unit: mm]

LM-AJ Series Secondary Side (Magnet) Dimensions

●LM-AJS20-080-JSS0 ●LM-AJS20-200-JSS0 ●LM-AJS20-400-JSS0

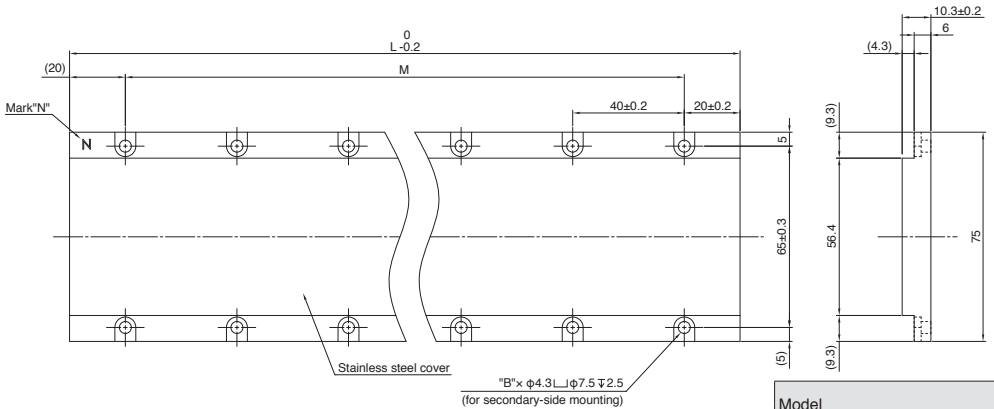

Model	Variable dimensions		
	L	M	B
LM-AJS20-080-JSS0	80	1× 40(=40) *1	4
LM-AJS20-200-JSS0	200	4× 40(=160) *1	10
LM-AJS20-400-JSS0	400	9× 40(=360) *1	20

*1. Pitch tolerance between holes at both ends: ±0.2 [Unit: mm]

Notes: 1. Power, grounding, and thermal protector lead wires do not have a long bending life. Fix the lead wires led from the primary side (coil) to a moving part to prevent the lead wires from repetitive bending.
2. Minimum bending radius of the lead wire equals to 10 times the standard overall diameter of the lead wire.

LM-AJ Series Primary Side (Coil) Dimensions (Note 1, 2)

●LM-AJP3B-17N-JSS0

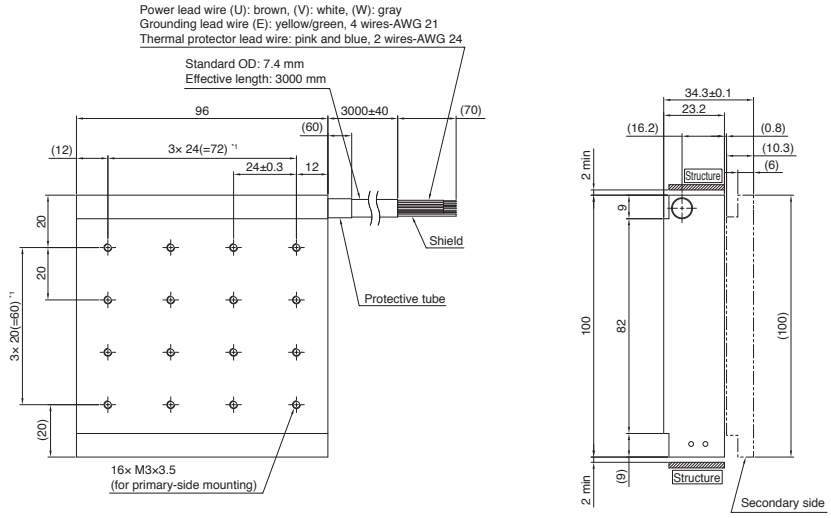

*1. Pitch tolerance between holes at both ends: ±0.3 [Unit: mm]

●LM-AJP3D-35R-JSS0

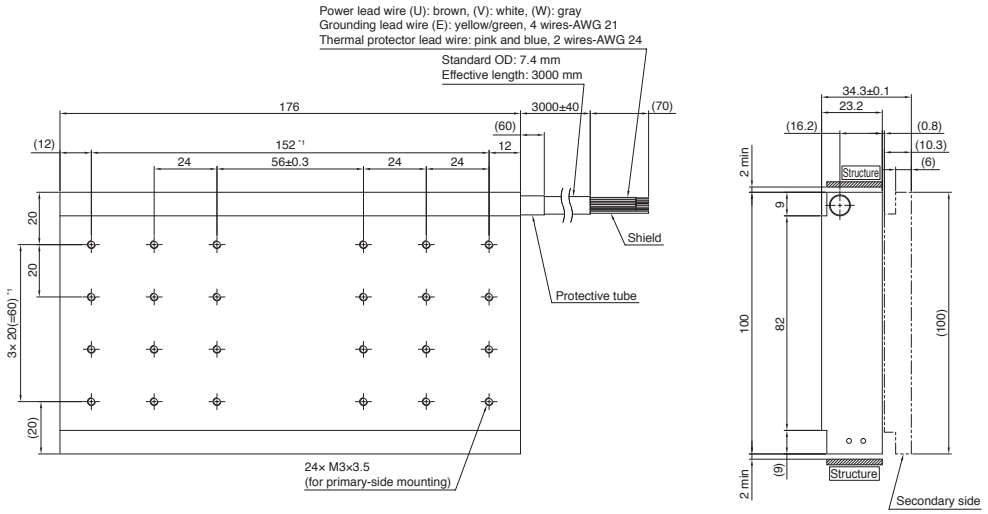

*1. Pitch tolerance between holes at both ends: ±0.3 [Unit: mm]

LM-AJ Series Secondary Side (Magnet) Dimensions

●LM-AJS30-080-JSS0 ●LM-AJS30-200-JSS0 ●LM-AJS30-400-JSS0

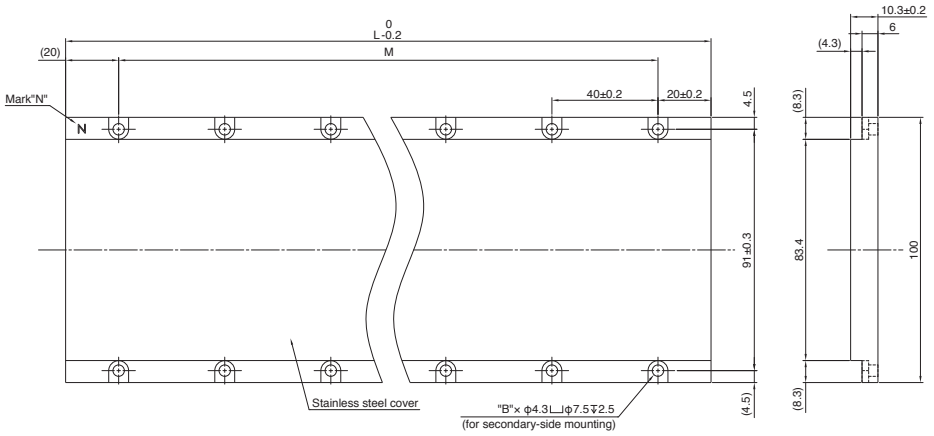

Model	Variable dimensions		
	L	M	B
LM-AJS30-080-JSS0	80	1× 40(=40) *1	4
LM-AJS30-200-JSS0	200	4× 40(=160) *1	10
LM-AJS30-400-JSS0	400	9× 40(=360) *1	20

*1. Pitch tolerance between holes at both ends: ±0.2 [Unit: mm]

Notes: 1. Power, grounding, and thermal protector lead wires do not have a long bending life. Fix the lead wires led from the primary side (coil) to a moving part to prevent the lead wires from repetitive bending.
2. Minimum bending radius of the lead wire equals to 10 times the standard overall diameter of the lead wire.

LM-AJ Series Primary Side (Coil) Dimensions (Note 1, 2)

●LM-AJP4B-22M-JSS0

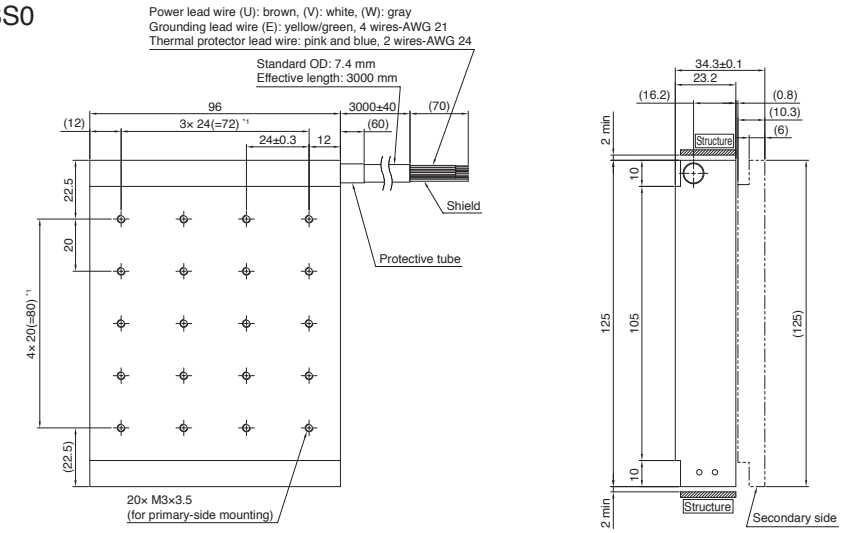

*1. Pitch tolerance between holes at both ends: ±0.3 [Unit: mm]

●LM-AJP4D-45N-JSS0

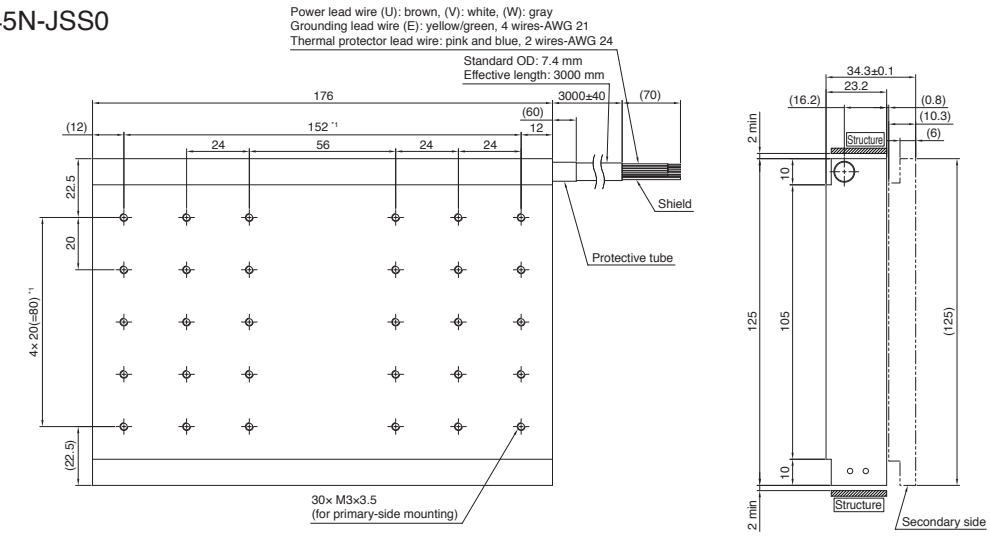

*1. Pitch tolerance between holes at both ends: ±0.3 [Unit: mm]

LM-AJ Series Secondary Side (Magnet) Dimensions

●LM-AJS40-080-JSS0 ●LM-AJS40-200-JSS0 ●LM-AJS40-400-JSS0

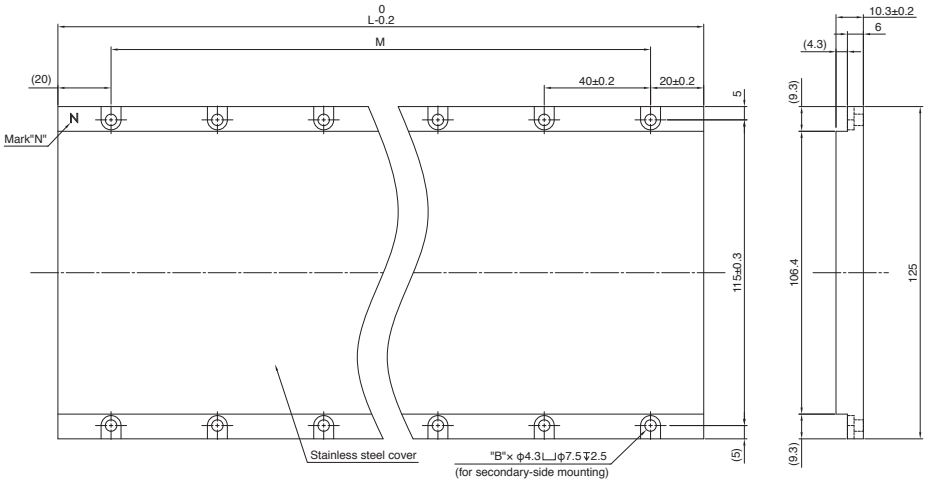

Model	Variable dimensions		
	L	M	B
LM-AJS40-080-JSS0	80	1× 40(=40) *1	4
LM-AJS40-200-JSS0	200	4× 40(=160) *1	10
LM-AJS40-400-JSS0	400	9× 40(=360) *1	20

*1. Pitch tolerance between holes at both ends: ±0.2 [Unit: mm]

Notes: 1. Power, grounding, and thermal protector lead wires do not have a long bending life. Fix the lead wires led from the primary side (coil) to a moving part to prevent the lead wires from repetitive bending.
2. Minimum bending radius of the lead wire equals to 10 times the standard overall diameter of the lead wire.

LM-F Series Primary Side (Coil) Dimensions (Note 1, 2)

●LM-FP2B-06M-1SS0 ●LM-FP2D-12M-1SS0 ●LM-FP2F-18M-1SS0

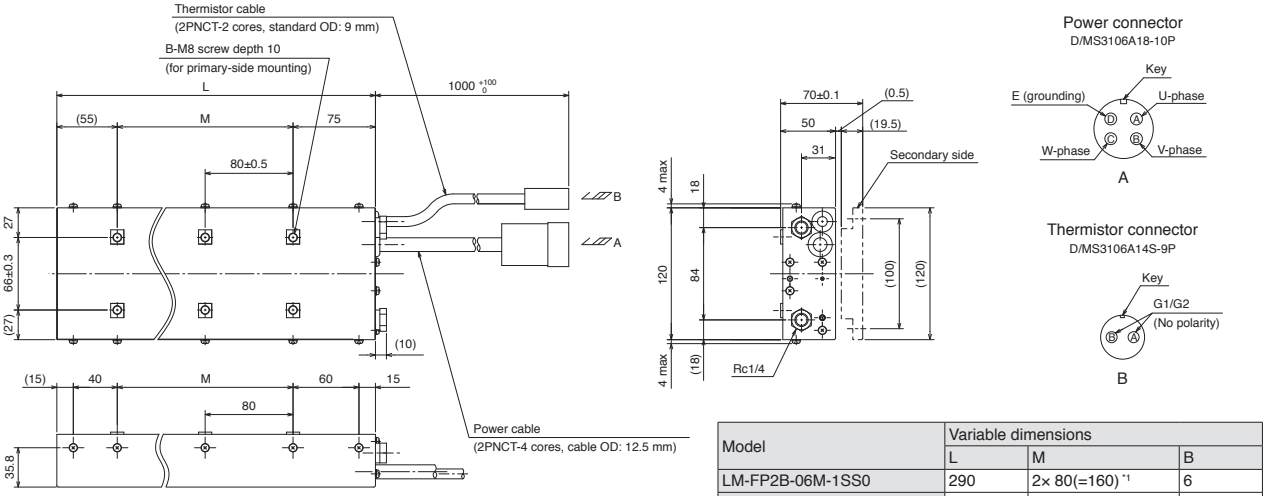

Model	Variable dimensions		
	L	M	B
LM-FP2B-06M-1SS0	290	2× 80(=160) *1	6
LM-FP2D-12M-1SS0	530	5× 80(=400) *1	12
LM-FP2F-18M-1SS0	770	8× 80(=640) *1	18

*1. Pitch tolerance between holes at both ends: ±0.5 [Unit: mm]

●LM-FP4B-12M-1SS0 ●LM-FP4D-24M-1SS0

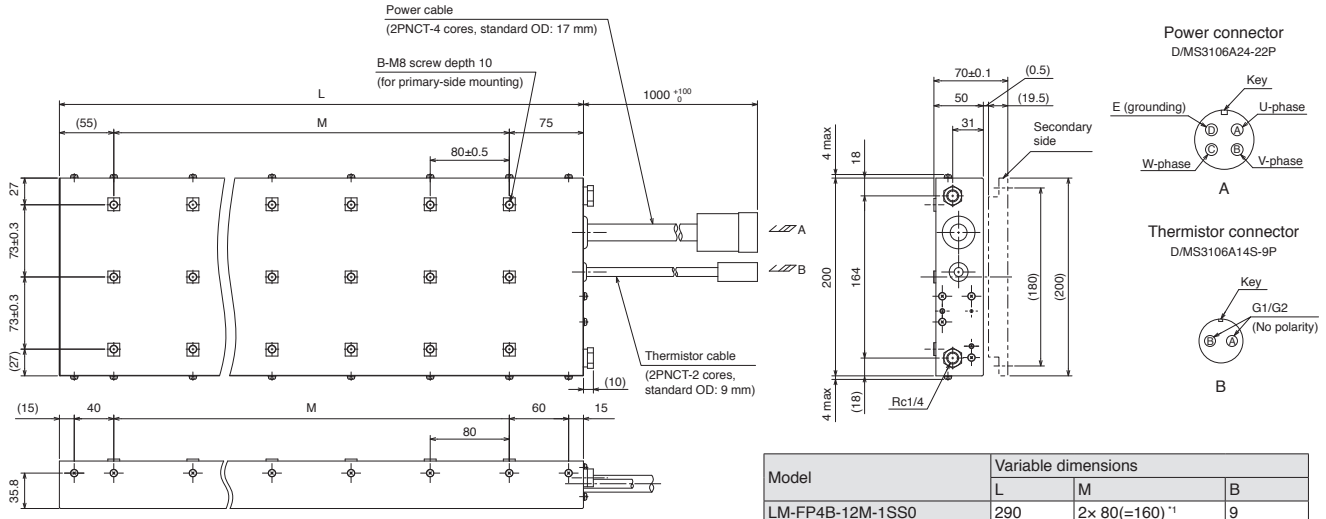

Model	Variable dimensions		
	L	M	B
LM-FP4B-12M-1SS0	290	2× 80(=160) *1	9
LM-FP4D-24M-1SS0	530	5× 80(=400) *1	18

*1. Pitch tolerance between holes at both ends: ±0.5 [Unit: mm]

Notes: 1. Power and thermistor cables do not have a long bending life. Fix the cables led from the primary side (coil) to a moving part to prevent the cables from repetitive bending.
2. Minimum bending radius of the cable equals to six times the standard overall diameter of the cable.

LM-F Series Secondary Side (Magnet) Dimensions

●LM-FS20-480-1SS0 ●LM-FS20-576-1SS0

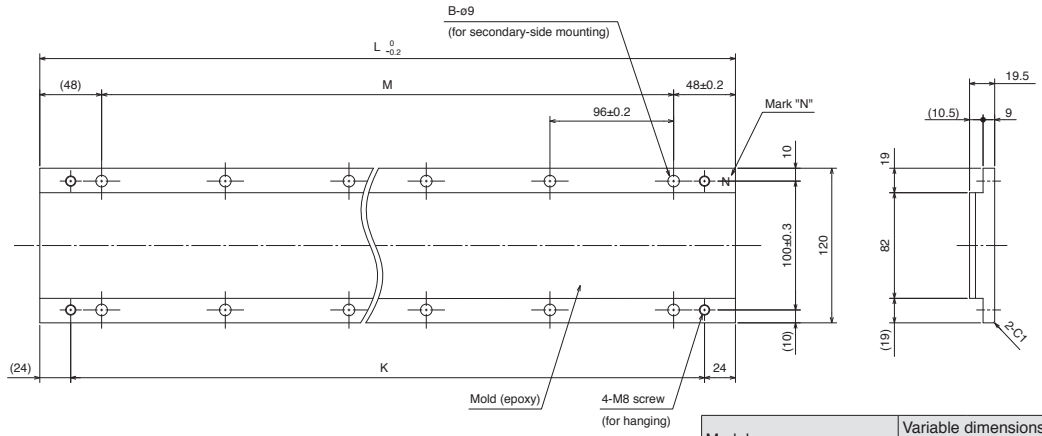

Model	Variable dimensions			
	L	M	B	K
LM-FS20-480-1SS0	480	4× 96(=384) *1	10	432
LM-FS20-576-1SS0	576	5× 96(=480) *1	12	528

*1. Pitch tolerance between holes at both ends: ±0.2 [Unit: mm]

●LM-FS40-480-1SS0 ●LM-FS40-576-1SS0

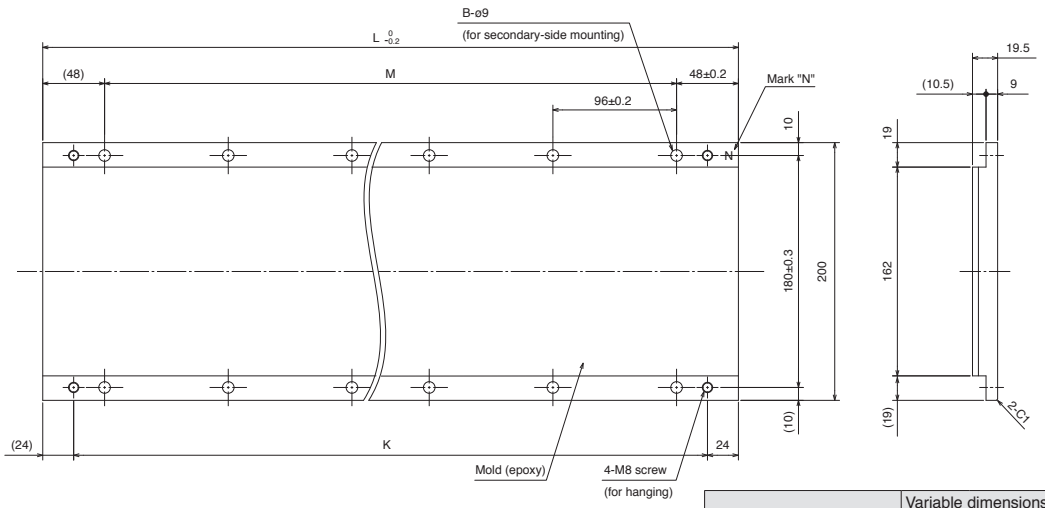

Model	Variable dimensions			
	L	M	B	K
LM-FS40-480-1SS0	480	4× 96(=384) *1	10	432
LM-FS40-576-1SS0	576	5× 96(=480) *1	12	528

*1. Pitch tolerance between holes at both ends: ±0.2 [Unit: mm]

LM-K2 Series Primary Side (Coil) Dimensions (Note 1, 2)

●LM-K2P1A-01M-2SS1 ●LM-K2P1C-03M-2SS1

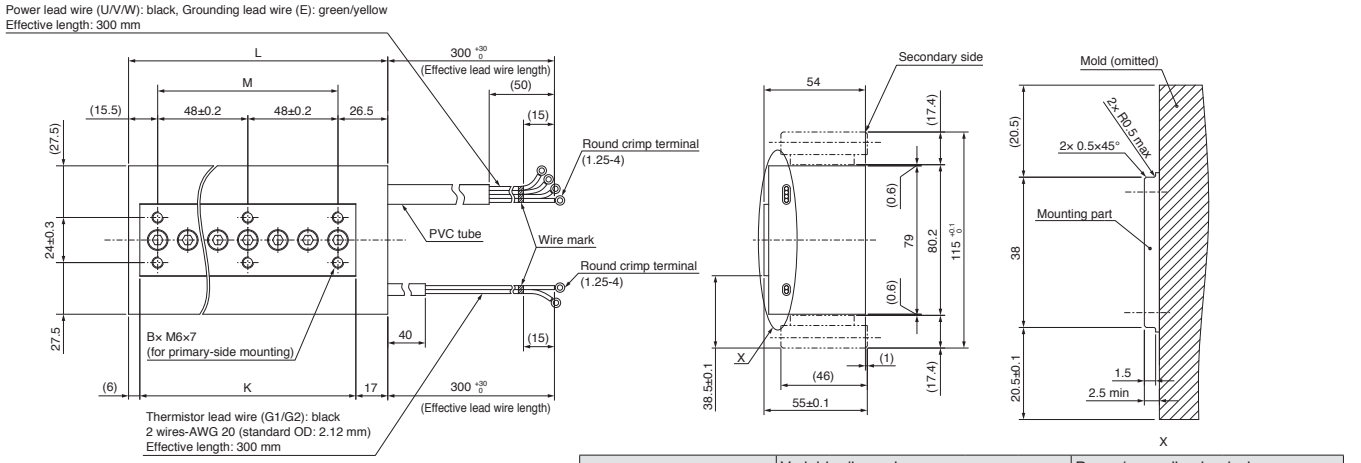

Model	Variable dimensions				Power/grounding lead wire	
	L	M	K	B	Size	Standard OD
LM-K2P1A-01M-2SS1	138	2× 48(=96) *1	115	6	4 wires-AWG 20	2.12
LM-K2P1C-03M-2SS1	330	6× 48(=288) *1	307	14	4 wires-AWG 16	2.7

*1. Pitch tolerance between holes at both ends: ±0.3 [Unit: mm]

●LM-K2P2A-02M-1SS1 ●LM-K2P2C-07M-1SS1 ●LM-K2P2E-12M-1SS1

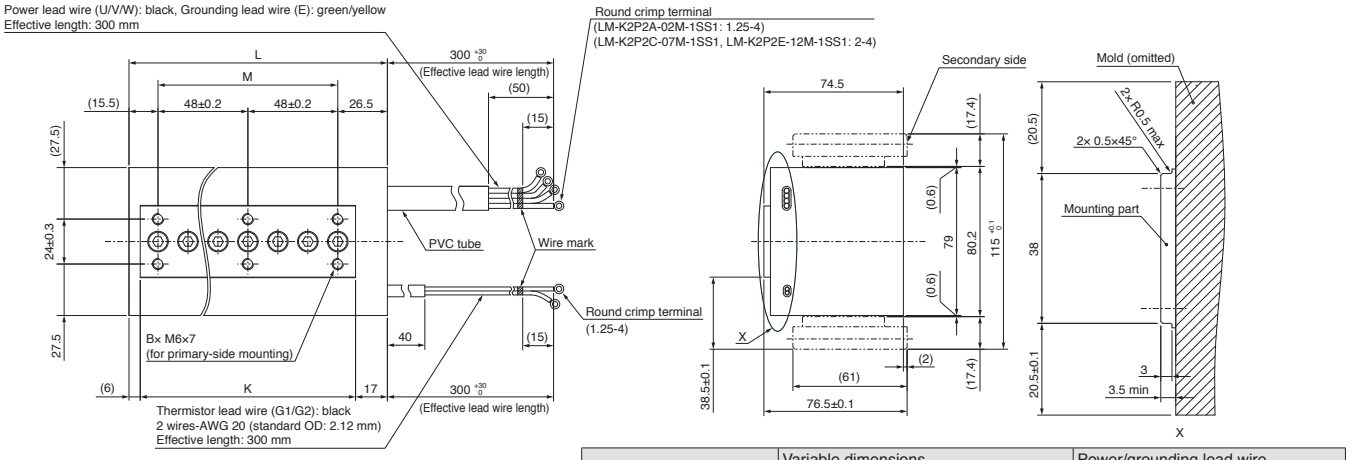

Model	Variable dimensions				Power/grounding lead wire	
	L	M	K	B	Size	Standard OD
LM-K2P2A-02M-1SS1	138	2× 48(=96) *1	115	6	4 wires-AWG 16	2.7
LM-K2P2C-07M-1SS1	330	6× 48(=288) *1	307	14	4 wires-AWG 14	3.12
LM-K2P2E-12M-1SS1	522	10× 48(=480) *1	499	22		

*1. Pitch tolerance between holes at both ends: ±0.3 [Unit: mm]

●LM-K2P3C-14M-1SS1 ●LM-K2P3E-24M-1SS1

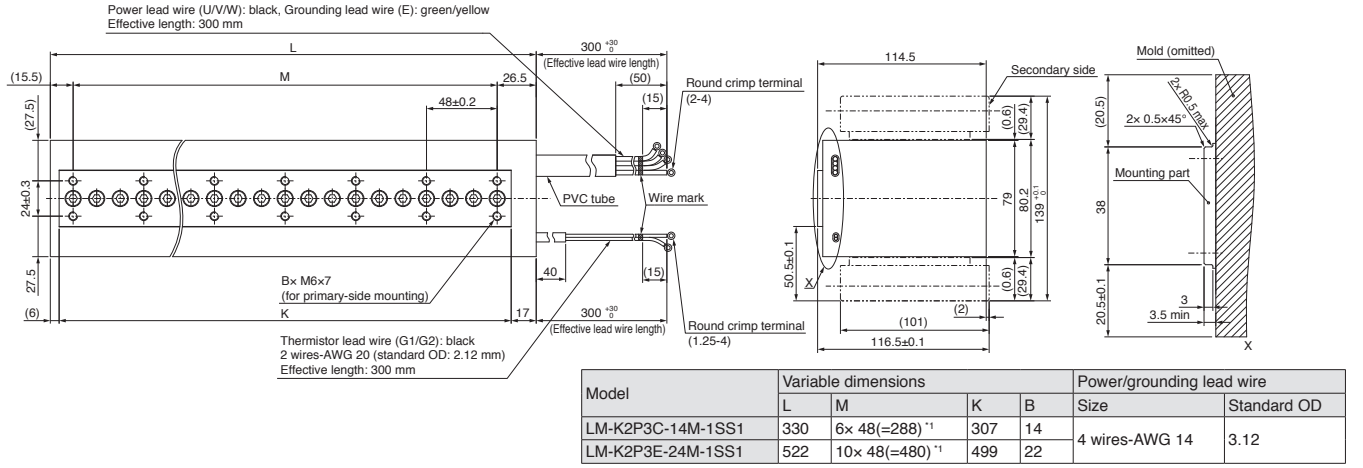

Model	Variable dimensions				Power/grounding lead wire	
	L	M	K	B	Size	Standard OD
LM-K2P3C-14M-1SS1	330	6× 48(=288) *1	307	14	4 wires-AWG 14	3.12
LM-K2P3E-24M-1SS1	522	10× 48(=480) *1	499	22		

*1. Pitch tolerance between holes at both ends: ±0.3 [Unit: mm]

Notes: 1. Power, grounding, and thermistor lead wires do not have a long bending life. Fix the lead wires led from the primary side (coil) to a moving part to prevent the lead wires from repetitive bending.
2. Minimum bending radius of the lead wire equals to six times the standard overall diameter of the lead wire.

LM-K2 Series Secondary Side (Magnet) Dimensions

●LM-K2S10-288-2SS1 ●LM-K2S10-384-2SS1 ●LM-K2S10-480-2SS1
●LM-K2S10-768-2SS1

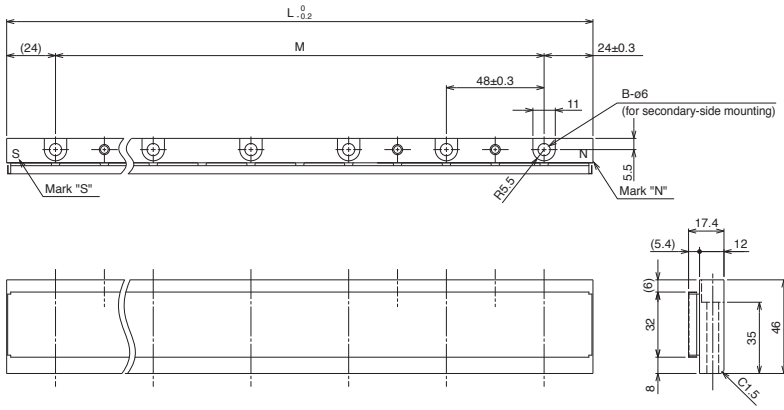

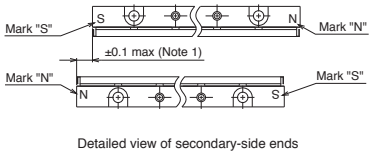

Detailed view of secondary-side ends

Model	Variable dimensions		
	L	M	B
LM-K2S10-288-2SS1	288	5× 48(=240) *1	6
LM-K2S10-384-2SS1	384	7× 48(=336) *1	8
LM-K2S10-480-2SS1	480	9× 48(=432) *1	10
LM-K2S10-768-2SS1	768	15× 48(=720) *1	16

*1. Pitch tolerance between holes at both ends: ±0.3 [Unit: mm]

●LM-K2S20-288-1SS1 ●LM-K2S20-384-1SS1 ●LM-K2S20-480-1SS1
●LM-K2S20-768-1SS1

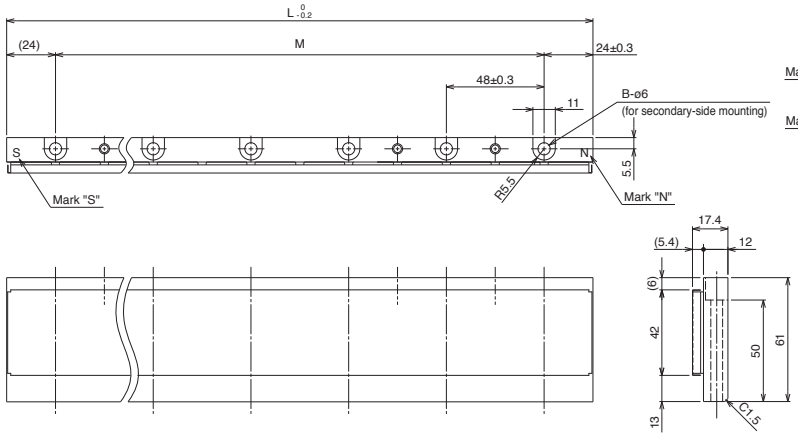

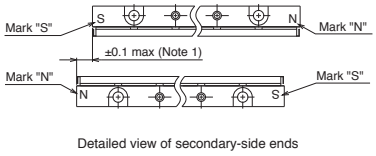

Detailed view of secondary-side ends

Model	Variable dimensions		
	L	M	B
LM-K2S20-288-1SS1	288	5× 48(=240) *1	6
LM-K2S20-384-1SS1	384	7× 48(=336) *1	8
LM-K2S20-480-1SS1	480	9× 48(=432) *1	10
LM-K2S20-768-1SS1	768	15× 48(=720) *1	16

*1. Pitch tolerance between holes at both ends: ±0.3 [Unit: mm]

●LM-K2S30-288-1SS1 ●LM-K2S30-384-1SS1 ●LM-K2S30-480-1SS1
●LM-K2S30-768-1SS1

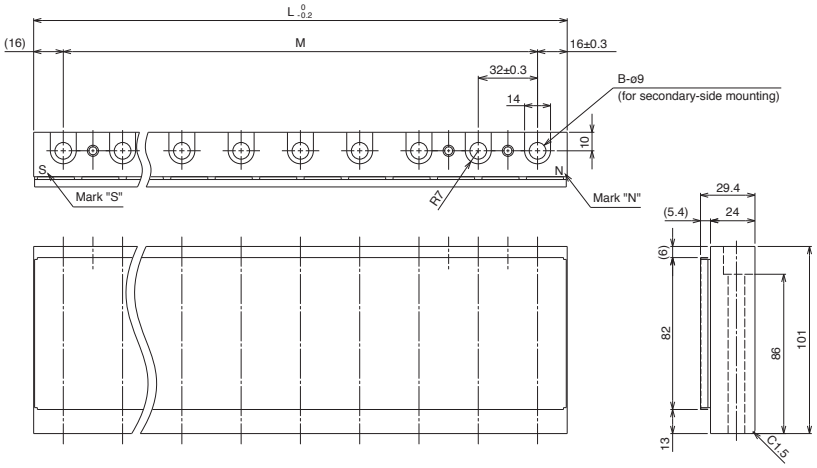

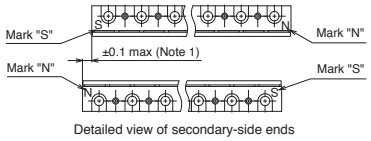

Detailed view of secondary-side ends

Model	Variable dimensions		
	L	M	B
LM-K2S30-288-1SS1	288	8× 32(=256) *1	9
LM-K2S30-384-1SS1	384	11× 32(=352) *1	12
LM-K2S30-480-1SS1	480	14× 32(=448) *1	15
LM-K2S30-768-1SS1	768	23× 32(=736) *1	24

*1. Pitch tolerance between holes at both ends: ±0.3 [Unit: mm]

Notes: 1. Longitudinal deviation of the secondary side must be within ±0.1 mm.

LM-U2 Series Primary Side (Coil) Dimensions (Note 1, 2)

●LM-U2PAB-05M-0SS0 ●LM-U2PAD-10M-0SS0 ●LM-U2PAF-15M-0SS0

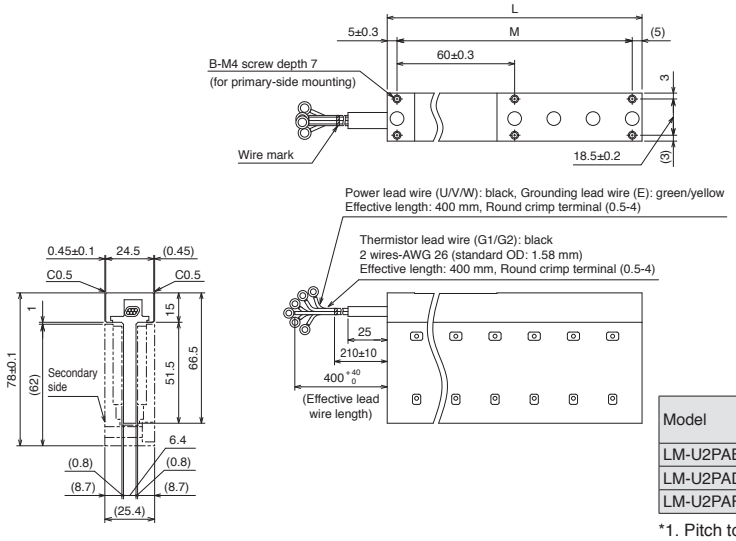

Model	Variable dimensions			Power/grounding lead wire	
	L	M	B	Size	Standard OD
LM-U2PAB-05M-0SS0	130	2× 60(=120) *1	6	AWG 26	1.58
LM-U2PAD-10M-0SS0	250	4× 60(=240) *1	10		
LM-U2PAF-15M-0SS0	370	6× 60(=360) *1	14		

*1. Pitch tolerance between holes at both ends: ±0.3 [Unit: mm]

●LM-U2PBB-07M-1SS0 ●LM-U2PBD-15M-1SS0 ●LM-U2PBF-22M-1SS0

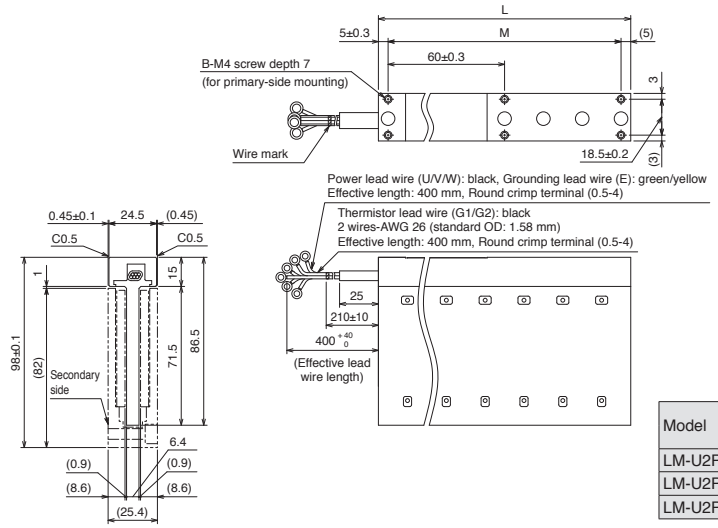

Model	Variable dimensions			Power/grounding lead wire	
	L	M	B	Size	Standard OD
LM-U2PBB-07M-1SS0	130	2× 60(=120) *1	6	AWG 26	1.58
LM-U2PBD-15M-1SS0	250	4× 60(=240) *1	10		
LM-U2PBF-22M-1SS0	370	6× 60(=360) *1	14		

*1. Pitch tolerance between holes at both ends: ±0.3 [Unit: mm]

●LM-U2P2B-40M-2SS0 ●LM-U2P2C-60M-2SS0 ●LM-U2P2D-80M-2SS0

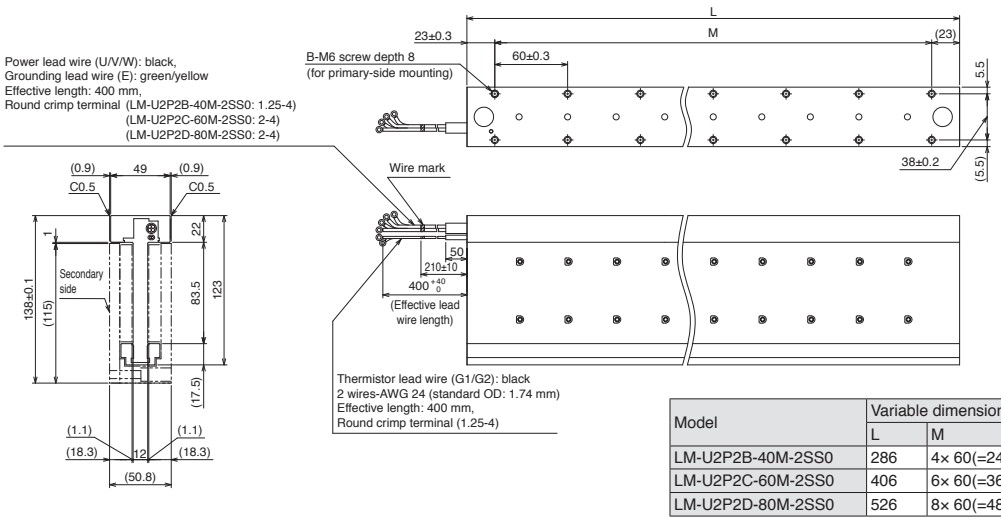

Model	Variable dimensions			Power/grounding lead wire	
	L	M	B	Size	Standard OD
LM-U2P2B-40M-2SS0	286	4× 60(=240) *1	10	AWG 16	2.7
LM-U2P2C-60M-2SS0	406	6× 60(=360) *1	14	AWG 14	3.12
LM-U2P2D-80M-2SS0	526	8× 60(=480) *1	18		

*1. Pitch tolerance between holes at both ends: ±0.3 [Unit: mm]

Notes: 1. Power, grounding, and thermistor lead wires do not have a long bending life. Fix the lead wires led from the primary side (coil) to a moving part to prevent the lead wires from repetitive bending.

2. Minimum bending radius of the lead wire equals to six times the standard overall diameter of the lead wire.

LM-U2 Series Secondary Side (Magnet) Dimensions

●LM-U2SA0-240-0SS0 ●LM-U2SA0-300-0SS0 ●LM-U2SA0-420-0SS0

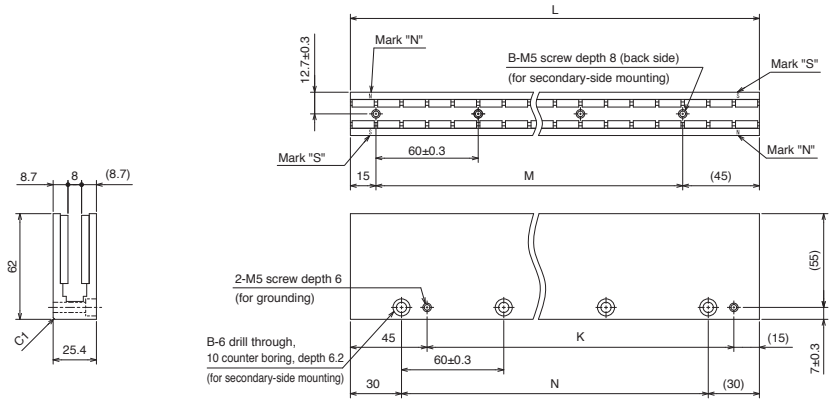

Model	Variable dimensions				
	L	M	B	K	N
LM-U2SA0-240-0SS0	240	3× 60(=180) *1	4	180	3× 60(=180) *1
LM-U2SA0-300-0SS0	300	4× 60(=240) *1	5	240	4× 60(=240) *1
LM-U2SA0-420-0SS0	420	6× 60(=360) *1	7	360	6× 60(=360) *1

*1. Pitch tolerance between holes at both ends: ±0.3 [Unit: mm]

●LM-U2SB0-240-1SS1 ●LM-U2SB0-300-1SS1 ●LM-U2SB0-420-1SS1

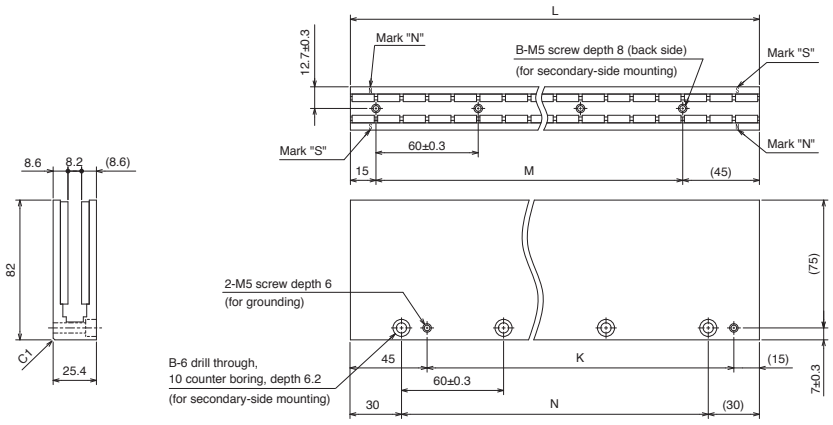

Model	Variable dimensions				
	L	M	B	K	N
LM-U2SB0-240-1SS1	240	3× 60(=180) *1	4	180	3× 60(=180) *1
LM-U2SB0-300-1SS1	300	4× 60(=240) *1	5	240	4× 60(=240) *1
LM-U2SB0-420-1SS1	420	6× 60(=360) *1	7	360	6× 60(=360) *1

*1. Pitch tolerance between holes at both ends: ±0.3 [Unit: mm]

●LM-U2S20-300-2SS1 ●LM-U2S20-480-2SS1

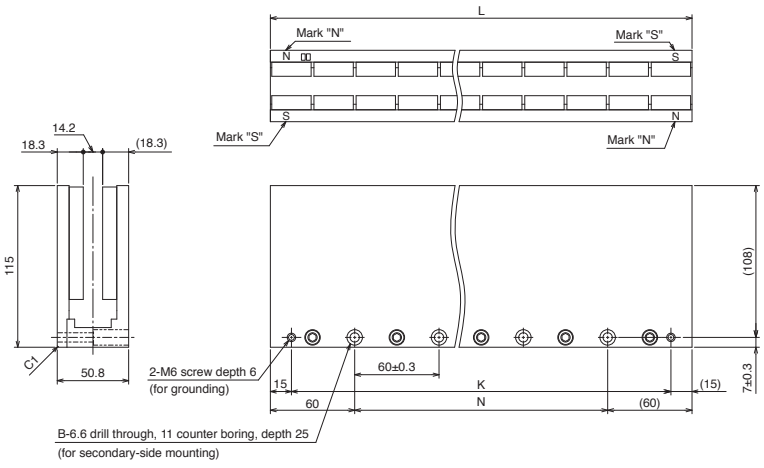

Model	Variable dimensions			
	L	N	B	K
LM-U2S20-300-2SS1	300	3× 60(=180) *1	4	270
LM-U2S20-480-2SS1	480	6× 60(=360) *1	7	450

*1. Pitch tolerance between holes at both ends: ±0.3 [Unit: mm]

LM-AU Series Primary Side (Coil) Dimensions (Note 1, 2)

●LM-AUP3A-03V-JSS0

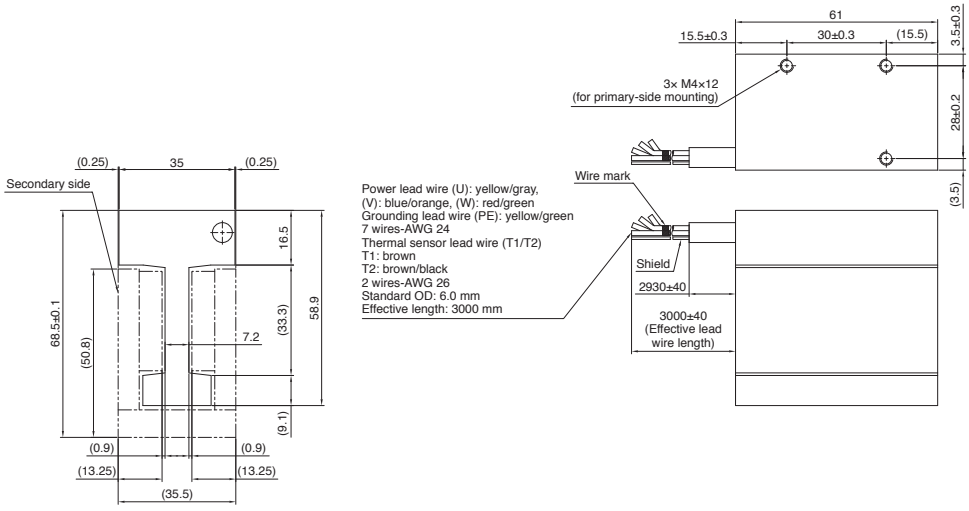

[Unit: mm]

●LM-AUP3B-06V-JSS0

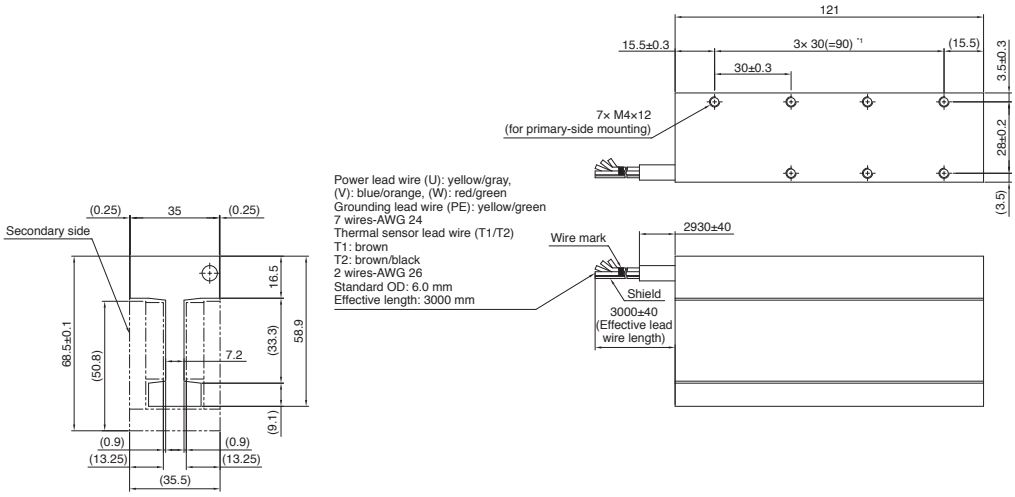

*1. Pitch tolerance between holes at both ends: ±0.3 [Unit: mm]

●LM-AUP3C-09V-JSS0

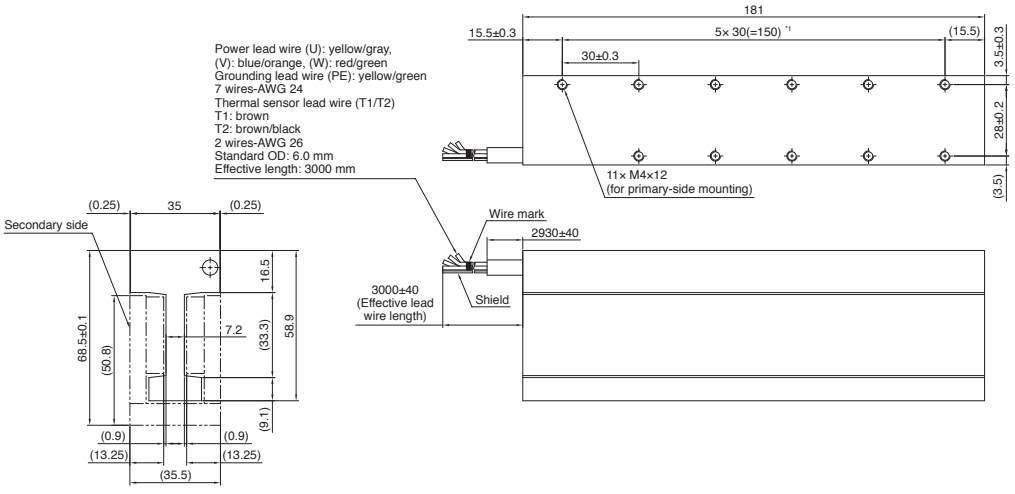

*1. Pitch tolerance between holes at both ends: ±0.3 [Unit: mm]

Notes: 1. Power, grounding, and thermal sensor lead wires do not have a long bending life. Fix the lead wires led from the primary side (coil) to a moving part to prevent the lead wires from repetitive bending.
2. Minimum bending radius of the lead wire equals to 10 times the standard overall diameter of the lead wire.

LM-AU Series Primary Side (Coil) Dimensions (Note 1, 2)

●LM-AUP3D-11R-JSS0

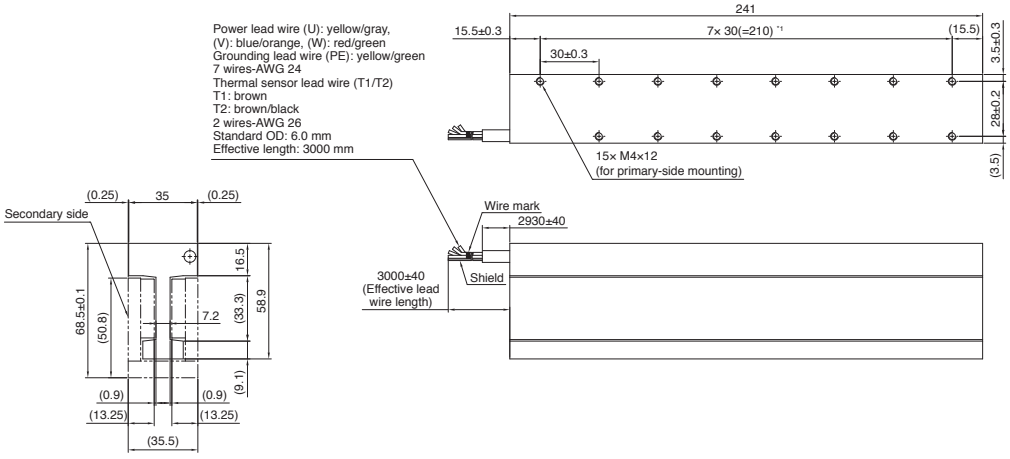

*1. Pitch tolerance between holes at both ends: ±0.3 [Unit: mm]

LM-AU Series Secondary Side (Magnet) Dimensions

●LM-AUS30-120-JSS0 ●LM-AUS30-180-JSS0 ●LM-AUS30-240-JSS0
●LM-AUS30-300-JSS0 ●LM-AUS30-600-JSS0

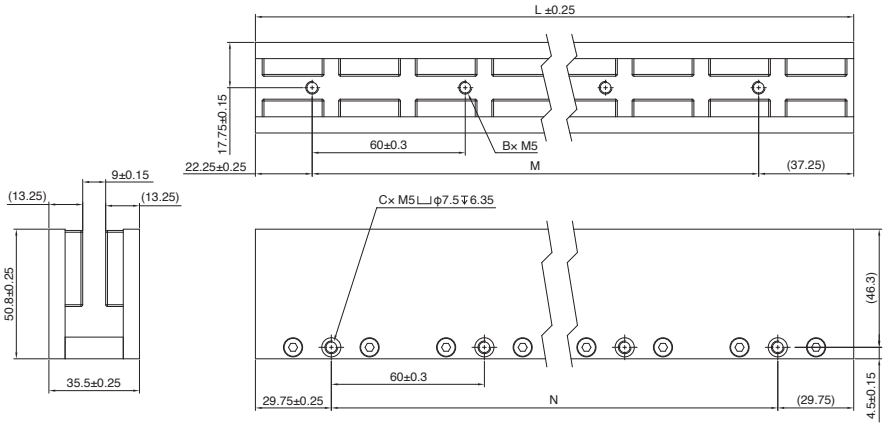

Model	Variable dimensions				
	L	M	N	B	C
LM-AUS30-120-JSS0	119.5	60 *1	60 *1	2	2
LM-AUS30-180-JSS0	179.5	2× 60(=120) *1	2× 60(=120) *1	3	3
LM-AUS30-240-JSS0	239.5	3× 60(=180) *1	3× 60(=180) *1	4	4
LM-AUS30-300-JSS0	299.5	4× 60(=240) *1	4× 60(=240) *1	5	5
LM-AUS30-600-JSS0	599.5	9× 60(=540) *1	9× 60(=540) *1	10	10

*1. Pitch tolerance between holes at both ends: ±0.3 [Unit: mm]

Notes: 1. Power, grounding, and thermal sensor lead wires do not have a long bending life. Fix the lead wires led from the primary side (coil) to a moving part to prevent the lead wires from repetitive bending.
2. Minimum bending radius of the lead wire equals to 10 times the standard overall diameter of the lead wire.

LM-AU Series Primary Side (Coil) Dimensions (Note 1, 2)

●LM-AUP4A-04R-JSS0

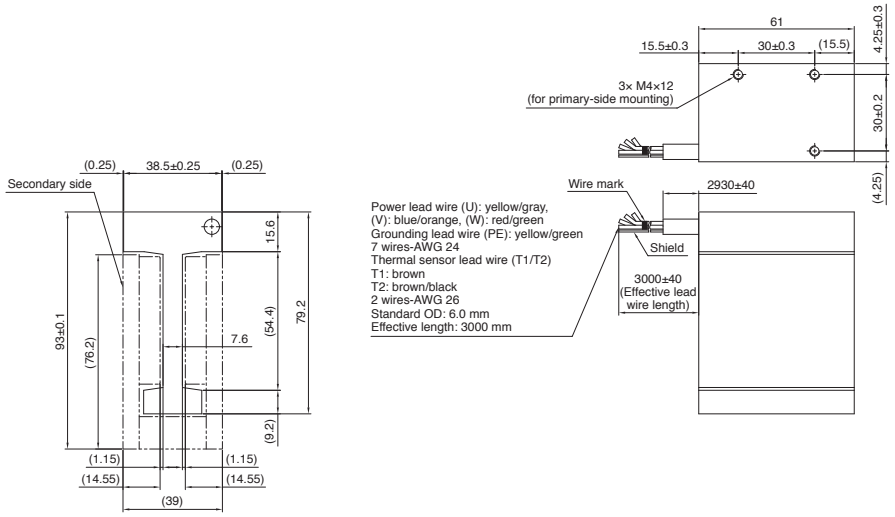

[Unit: mm]

●LM-AUP4B-09R-JSS0

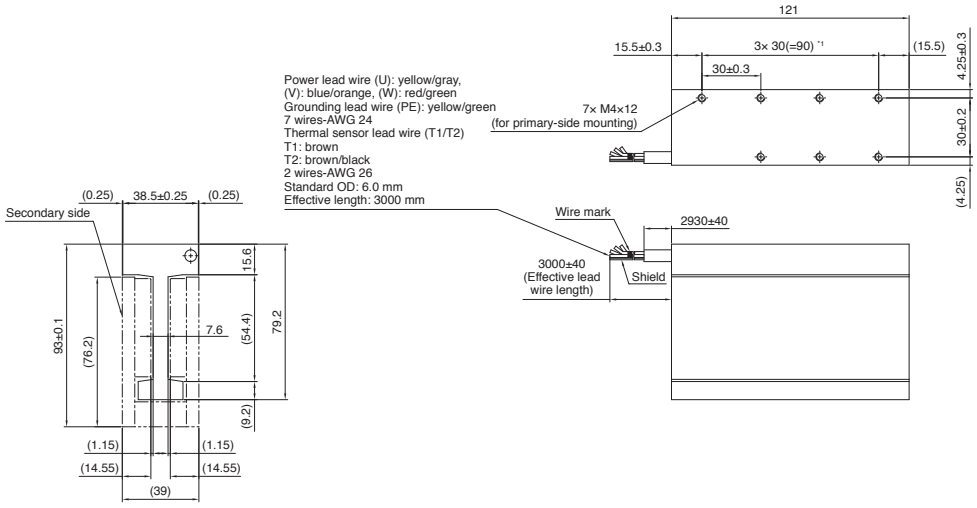

*1. Pitch tolerance between holes at both ends: ±0.3 [Unit: mm]

●LM-AUP4C-13P-JSS0

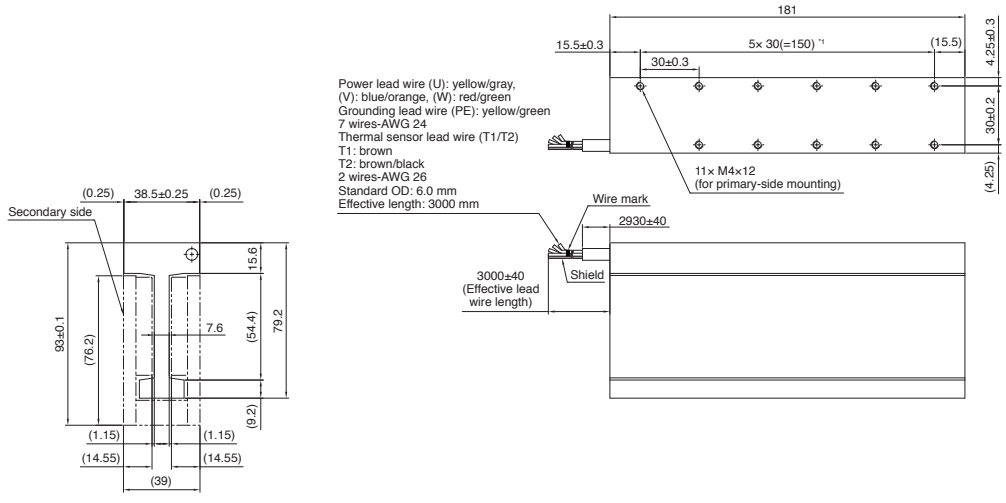

*1. Pitch tolerance between holes at both ends: ±0.3 [Unit: mm]

Notes: 1. Power, grounding, and thermal sensor lead wires do not have a long bending life. Fix the lead wires led from the primary side (coil) to a moving part to prevent the lead wires from repetitive bending.
2. Minimum bending radius of the lead wire equals to 10 times the standard overall diameter of the lead wire.

LM-AU Series Primary Side (Coil) Dimensions (Note 1, 2)

●LM-AUP4D-18M-JSS0

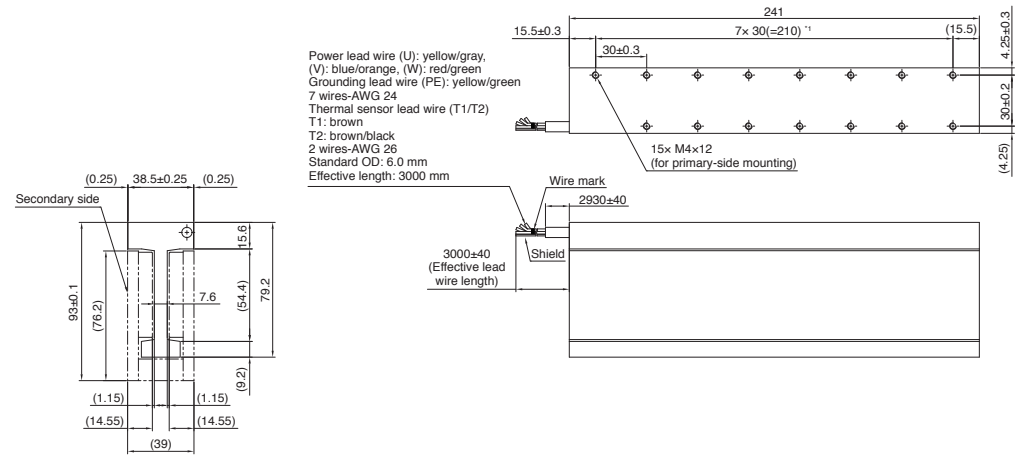

*1. Pitch tolerance between holes at both ends: ±0.3 [Unit: mm]

●LM-AUP4F-26P-JSS0

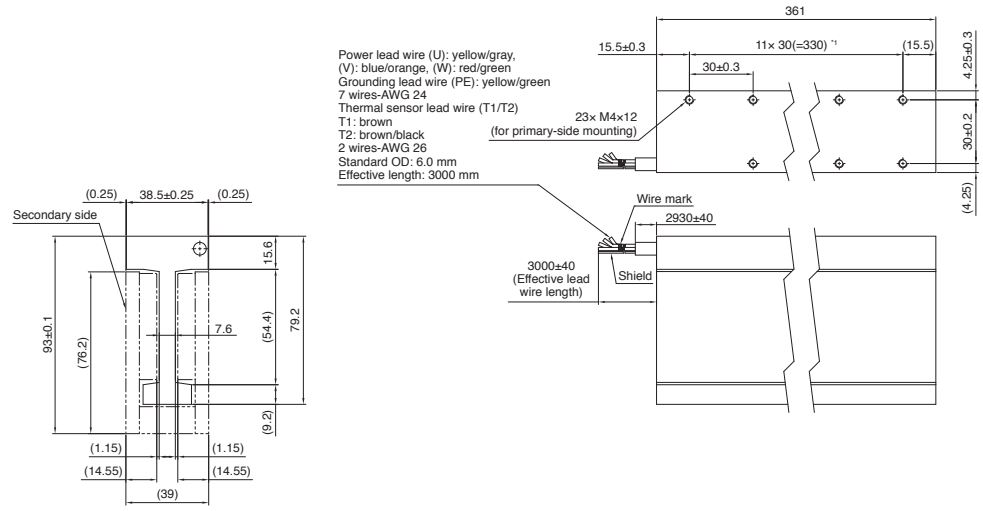

*1. Pitch tolerance between holes at both ends: ±0.3 [Unit: mm]

●LM-AUP4H-35M-JSS0

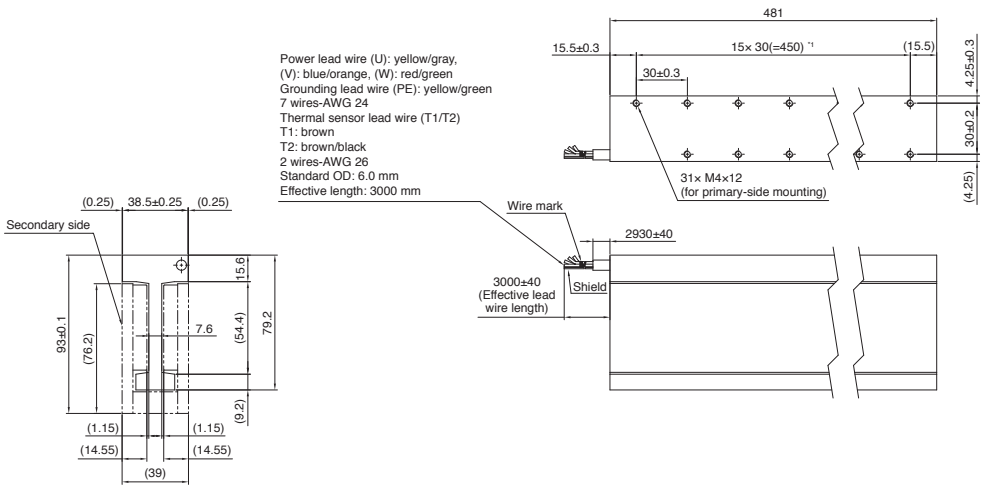

*1. Pitch tolerance between holes at both ends: ±0.3 [Unit: mm]

Notes: 1. Power, grounding, and thermal sensor lead wires do not have a long bending life. Fix the lead wires led from the primary side (coil) to a moving part to prevent the lead wires from repetitive bending.
2. Minimum bending radius of the lead wire equals to 10 times the standard overall diameter of the lead wire.

LM-AU Series Secondary Side (Magnet) Dimensions

●LM-AUS40-120-JSS0 ●LM-AUS40-180-JSS0 ●LM-AUS40-240-JSS0
●LM-AUS40-300-JSS0 ●LM-AUS40-600-JSS0

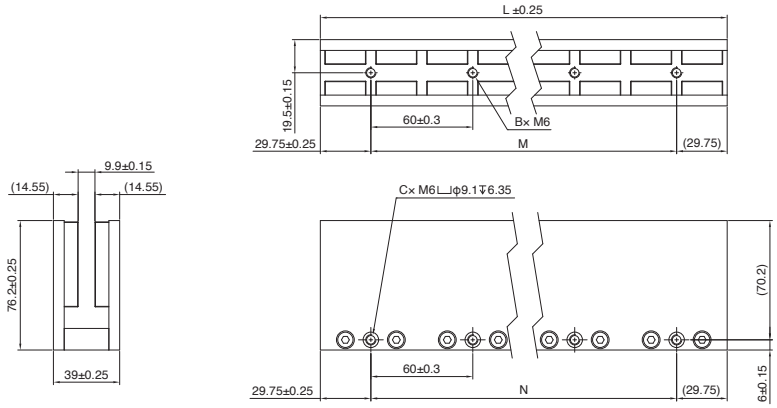

Model	Variable dimensions				
	L	M	N	B	C
LM-AUS40-120-JSS0	119.5	60 *1	60 *1	2	2
LM-AUS40-180-JSS0	179.5	2× 60(=120) *1	2× 60(=120) *1	3	3
LM-AUS40-240-JSS0	239.5	3× 60(=180) *1	3× 60(=180) *1	4	4
LM-AUS40-300-JSS0	299.5	4× 60(=240) *1	4× 60(=240) *1	5	5
LM-AUS40-600-JSS0	599.5	9× 60(=540) *1	9× 60(=540) *1	10	10

*1. Pitch tolerance between holes at both ends: ±0.3 [Unit: mm]

List of Linear Encoders (Note 1)

Contact your local sales office for compatible linear encoders.

Mitsubishi Electric high-speed serial communication-compatible absolute type

Manufacturer	Model	Resolution	Rated speed (Note 2)	Maximum effective measurement length (Note 3)	Communication method (Note 4)
Magnescale Co., Ltd.	SR77	0.01 µm, 0.05 µm	3.3 m/s	2040 mm	Two-wire type
	SR87			3040 mm	
	SR27A	0.01 µm	3.3 m/s	2040 mm	Two-wire type/ Four-wire type
	SR67A			3640 mm	
	SmartSCALE SQ47	0.005 µm	3.3 m/s	3740 mm	
	SmartSCALE SQ57			3770 mm	
Mitutoyo Corporation	AT343A	0.05 µm	2.0 m/s	3000 mm	Two-wire type
	AT543A-SC		2.5 m/s	2200 mm	
	AT545A-SC	20 µm/4096 (Approx. 0.005 µm)	2.5 m/s	2200 mm	
	ST743A	0.1 µm	5.0 m/s	6000 mm	
	ST744A				
	ST748A				
	ST1341A	0.01 µm	8.0 m/s	12000 mm	
	ST1342A	0.001 µm		4200 mm	
Renishaw	RESOLUTE RL40M	1 nm	100 m/s	2100 mm	Two-wire type
		50 nm		20990 mm	
	EVOLUTE EL40M	50 nm, 100 nm, 500 nm	100 m/s	10010 mm	
Heidenhain	LC 495M	0.001 µm, 0.01 µm	3.0 m/s	2040 mm	Four-wire type
	LC 496M				
	LC 195M			4240 mm	
	LC 196M				
	LIC 4193M	0.001 µm, 0.005 µm, 0.01 µm	10.0 m/s	3040 mm	Two-wire type/ Four-wire type
	LIC 4195M			28440 mm	
	LIC 4197M			6040 mm	
	LIC 4199M			1020 mm	
	LIC 3197M	0.01 µm	10.0 m/s	10000 mm	
	LIC 3199M				
	LIC 2197M	0.05 µm, 0.1 µm	10.0 m/s	6020 mm	
	LIC 2199M			6020 mm	
RSF Elektronik	MC15M	0.05 µm, 0.1 µm	10.0 m/s	3020 mm	
Nidec Machine Tool Corporation	MPFA-HZ-M01	0.1 µm	30.0 m/s	8000 mm	Two-wire type

Notes: 1. Contact the relevant linear encoder manufacturer for details on operating environment and specifications of the linear encoder such as ambient temperature, vibration resistance and IP rating.
2. The listed values are the manufacturer's specifications. When combined with servo amplifiers, the specification value is either the listed value or the servo motor maximum speed, whichever is lower.
3. The listed values are the manufacturer's specifications. The maximum length of the encoder cable between a linear encoder and a servo amplifier is 30 m. For a linear encoder manufactured by Nidec Machine Tool Corporation, the maximum length of the encoder cable between the linear encoder and a servo amplifier is 20 m.
4. The compatible communication method varies by the servo amplifier and operation mode. Refer to "External Encoder Connection Specifications" in this catalog.

List of Linear Encoders (Note 1)

Contact your local sales office for compatible linear encoders.

Mitsubishi Electric high-speed serial communication-compatible incremental type

Manufacturer	Model	Resolution	Rated speed (Note 2)	Maximum effective measurement length (Note 3)	Communication method (Note 4)
Magnescale Co., Ltd.	SR75	0.01 µm, 0.05 µm	3.3 m/s	2040 mm	Two-wire type
	SR85			3040 mm	
	SL710 + PL101-RM/RHM	0.1 µm	10.0 m/s	100000 mm	
	SQ10 + PQ10 + MQ10	0.05 µm, 0.1 µm	10.0 m/s	3800 mm	Two-wire type/ Four-wire type
	BL50H + BD700	400 nm/800-fold subdivision (0.5 nm) (Note 11, 12) 400 nm/400-fold subdivision (1 nm) (Note 11)	3 m/s	1070 mm	Two-wire type
	BL50H-FSE (Note 10)			1400 mm	
Heidenhain	LIDA 483 + EIB 3091M (16384-fold subdivision) (Note 7)	20 µm/16384-fold subdivision (Approx. 1.22 nm)	4.0 m/s	3040 mm	Four-wire type
	LIDA 485 + EIB 3091M (16384-fold subdivision) (Note 7)			30040 mm	
	LIDA 487 + EIB 3091M (16384-fold subdivision) (Note 7)			6040 mm	
	LIDA 489 + EIB 3091M (16384-fold subdivision) (Note 7)			1020 mm	
	LIDA 287 + EIB 3091M (16384-fold subdivision) (Note 7)	200 µm/16384-fold subdivision (Approx. 12.2 nm)		10000 mm	
	LIDA 289 + EIB 3091M (16384-fold subdivision) (Note 7)				
	LIF 481 + EIB 3091M (4096-fold subdivision)	4 µm/4096-fold subdivision (Approx. 0.977 nm)	1.6 m/s	1640 mm (Note 9)	
	LIP 6081 + EIB 3091M (4096-fold subdivision)			3040 mm (Note 9)	
Nidec Instruments Corporation	PSLH041	0.1 µm	5.0 m/s	2400 mm	Two-wire type
Nidec Machine Tool Corporation	MPFA-HI-M01 (Note 6)	0.1 µm	30.0 m/s	10000 mm (Note 8)	Two-wire type

A/B/Z-phase differential output type (Note 13)

Manufacturer	Model	Resolution	Rated speed (Note 2)	Maximum effective measurement length (Note 3)	Communication method (Note 4)
Not designated	-	0.001 µm to 5 µm (Note 5)	Depends on the linear encoder	Depends on the linear encoder	A/B/Z-phase differential output method

Notes:
1. Contact the relevant linear encoder manufacturer for details on operating environment and specifications of the linear encoder such as ambient temperature, vibration resistance and IP rating.
2. The listed values are the manufacturer's specifications. When combined with servo amplifiers, the specification value is either the listed value or the servo motor maximum speed, whichever is lower.
3. The listed values are the manufacturer's specifications. The maximum length of the encoder cable between a linear encoder and a servo amplifier is 30 m. For a linear encoder manufactured by Nidec Machine Tool Corporation, the maximum length of the encoder cable between the linear encoder and a servo amplifier is 20 m.
4. The compatible communication method varies by the servo amplifier and operation mode. Refer to "External Encoder Connection Specifications" in this catalog.
5. Select the linear encoder within this range.
6. There are some restrictions on this linear encoder. When using it, contact your local sales office.
7. For this combination, it is recommended using EIB 3091M with a subdivision of 16384. EIB 3091M with a subdivision of 4096 is also available. Contact the manufacturer for details.
8. For the measurement length over 10000 mm, contact Nidec Machine Tool Corporation.
9. The maximum effective measurement length varies depending on the scale to be used. Contact the manufacturer for details.
10. This linear encoder does not support a fully closed loop control system. In addition, it cannot be used with 3-axis servo amplifiers and 3-axis drive units.
11. The supported resolution is 1 nm or 0.5 nm. The resolution is 1 nm for 400-fold subdivision, and it is 0.5 nm for 800-fold subdivision. Contact the manufacturer for details.
12. The LM-U2 (medium thrust) series and LM-AJ series are the only linear servo motors that support a resolution of 0.5 nm.
13. The phase difference of the A-phase pulse and the B-phase pulse, and the width of the Z-phase pulse must be 200 ns or wider. The output pulse of A-phase and B-phase of the A/B/Z-phase differential output linear encoder is in the multiply-by-four count method. For linear encoders without Z-phase, some of the homing modes cannot be used. Refer to "MR-J5 User's Manual" for details.

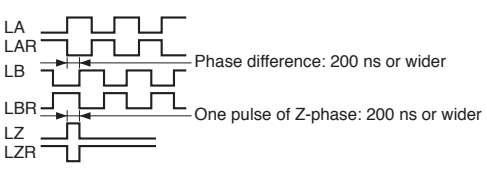

Determining the Number of the Secondary-Side (Magnet) Blocks

The number of the secondary-side (magnet) blocks is determined according to the total distance calculated from the following equation (Note 2) :

(Total length of aligned secondary side (magnet)) ≥ (Maximum feed distance) + (Length of the primary side (coil))

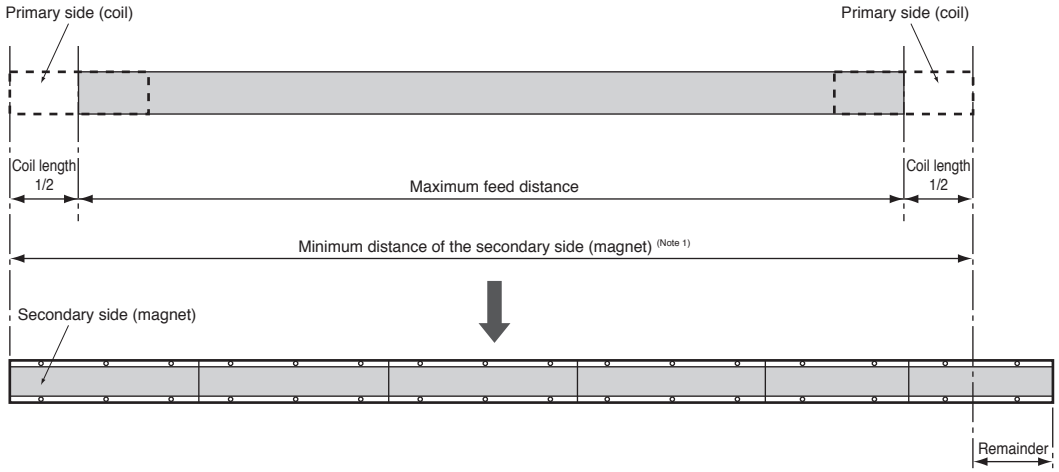

Notes: 1. Pitch tolerance between any two holes must be within ±0.2 mm. When two or more secondary sides (magnets) are mounted lined up, there may be a gap between each block, depending on the mounting method and the number of the blocks.
2. LM-K2 series has a structure of magnetic attraction counter-force and requires at least two blocks of identical secondary side (magnet). Therefore, the total number of the secondary side necessary equals to twice the number determined from the equation.

MEMO

6 Direct Drive Motors

Model Designation....6-2

Specifications
TM-RG2M Series/TM-RU2M Series....6-4
TM-RFM Series....6-6

Machine Accuracy....6-9

Power Supply Capacity....6-10

Dimensions
TM-RG2M Series....6-12
TM-RU2M Series....6-14
TM-RFM Series....6-16

* Refer to p. 7-90 in this catalog for conversion of units.
* The characteristics and numerical values without tolerances mentioned in this catalog are representative values.

Model Designation (Note 1, 2)

Low-profile series

●Flange type

T M - R G 2 M

Direct drive motor series

Symbol	Rated speed [r/min]
30	300

Symbol	Motor outer diameter [mm] (Frame dimensions)
C	ø130
E	ø180
G	ø230

Symbol	Rated torque [N•m]
002	2.2
004	4.5
009	9

●Table type

T M - R U 2 M

Direct drive motor series

Symbol	Rated speed [r/min]
30	300

Symbol	Motor outer diameter [mm] (Frame dimensions)
C	ø130
E	ø180
G	ø230

Symbol	Rated torque [N•m]
002	2.2
004	4.5
009	9

Notes: 1. This section describes what each symbol in a model name indicates. Some combinations of symbols are not available.
2. Use the direct drive motors manufactured in June 2019 or later when connecting to MR-J5 servo amplifiers.
If the direct drive motors manufactured before the date above are connected, an alarm occurs.

Model Designation (Note 1, 2)

High-rigidity series

TM-RFM□□□

Direct drive motor series

Symbol	Rated torque [N•m]
002	2
004	4
006	6
012	12
018	18
040	40
048	48
072	72
120	120
240	240

Symbol	Motor outer diameter [mm] (Frame dimensions)
C	ø130
E	ø180
G	ø230
J	ø330

Symbol	Rated speed [r/min]
10	100
20	200

Notes: 1. This section describes what each symbol in a model name indicates. Some combinations of symbols are not available.
2. Use the direct drive motors manufactured in June 2019 or later when connecting to MR-J5 servo amplifiers.
If the direct drive motors manufactured before the date above are connected, an alarm occurs.

TM-RG2M Series/TM-RU2M Series Specifications

Direct drive motor model	TM-RG2M / TM-RU2M	002C30	004E30	009G30
Motor outer diameter (frame dimensions) [mm]		ø130	ø180	ø230
Continuous running duty	Rated output (Note 4) [W]	69	141 (188)	283
	Rated torque (Note 3, 4) [N•m]	2.2	4.5 (6)	9
Maximum torque (Note 4) [N•m]		8.8	13.5 (18)	27
Rated speed [r/min]		300		
Maximum speed [r/min]		600		
Power rate at continuous rated torque (Note 4) [kW/s]		6.1	3.4 (6.0)	5.5
Rated current (Note 4) [A]		1.2	1.3 (1.7)	2.2
Maximum current (Note 4) [A]		4.9	4.0 (5.3)	6.7
Moment of inertia J [× 10^{-4} kg•m^2]		7.88	60.2	147
Recommended load to motor inertia ratio (Note 1)		50 times or less	20 times or less	
Absolute accuracy (Note 5) [s]		±15	±12.5	
Speed/ position detector	Absolute/incremental *1	21-bit encoder 2097152 pulses/rev	22-bit encoder 4194304 pulses/rev	
Type		Permanent magnet synchronous motor		
Thermistor		Built-in		
Insulation class		155 (F)		
Structure		Totally enclosed, natural cooling (IP rating: IP40) (Note 2)		
Vibration resistance *2 [m/s^2]		X: 49, Y: 49		
Vibration rank		V10 *4		
Rotor permissible load *3	Moment load [N•m]	15	49	65
	Axial load [N]	770	2300	3800
Mass [kg]		2.7	5.5	8.3

Notes: 1. Contact your local sales office if the load to motor inertia ratio exceeds the value in the table.
2. Connectors and a gap along the rotor (output shaft) are excluded.
3. When unbalanced torque is generated, such as in a vertical lift machine, use the absolute position detection system, and keep the unbalanced torque under 70 % of the servo motor rated torque.
4. The values in brackets are applicable when the torque is increased in combination with a larger-capacity servo amplifier. Refer to "Combinations of Direct Drive Motors and Servo Amplifiers" in this catalog for the combinations.
5. Absolute accuracy varies according to the mounting state of load and the surrounding environment.

Refer to "Annotations for Direct Drive Motor Specifications" on p. 6-11 in this catalog for the details about asterisks 1 to 4.

TM-RG2M Series/TM-RU2M Series Torque Characteristics

TM-RG2M002C30,
TM-RU2M002C30 (Note 1, 2, 3)

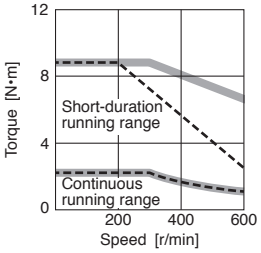

TM-RG2M004E30,
TM-RU2M004E30 (Note 1, 2, 3)

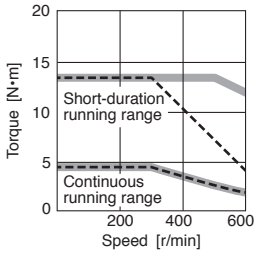

TM-RG2M004E30,
TM-RU2M004E30 (Note 1, 2, 3, 4)
(when torque is increased)

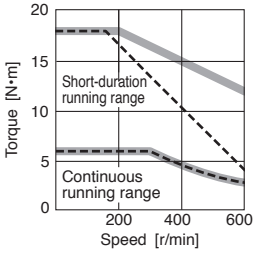

TM-RG2M009G30,
TM-RU2M009G30 (Note 1, 2, 3)

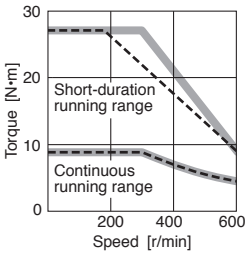

Notes: 1. ▬▬ : For 3-phase 200 V AC or 1-phase 230 V AC
2. - - - - : For 1-phase 200 V AC
3. Torque drops when the power supply voltage is below the specified value.
4. This value is applicable when the torque is increased in combination with a larger-capacity servo amplifier. Refer to "Combinations of Direct Drive Motors and Servo Amplifiers" in this catalog for the combinations.

Mounting of TM-RG2M Series/TM-RU2M Series

●Flange type (with pilot)

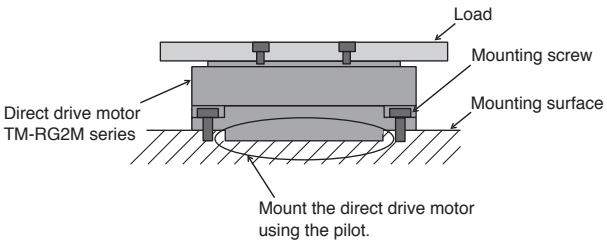

●Table type (with positioning pin holes)

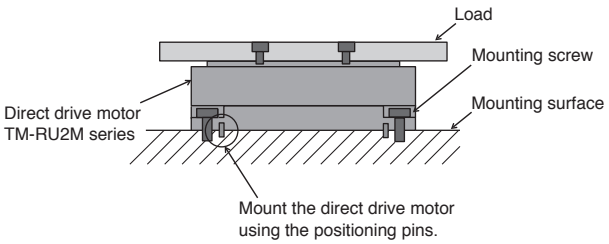

Precautions when mounting the direct drive motor

- Fix the direct drive motor securely on a high-rigid mounting surface because a machine resonance may occur if the rigidity of the mounting surface is low.
- Fix the mounting screws of the direct drive motor and a rotating table securely to ensure enough rigidity.
- To ensure heat dissipation and accuracy, mount the direct drive motor on a high-rigid mounting surface which has enough heat dissipation area without gaps between the bottom of the direct drive motor and the mounting surface.
- The flange type has a higher mounting accuracy than the table type. When a high-mounting accuracy is required, select the flange type.
  Refer to "Direct Drive Motor Machine Accuracy" on p. 6-9 in this catalog for the machine accuracy of each direct drive motor, and refer to the dimensions in this catalog for the dimensional tolerance.

TM-RFM Series Specifications

Direct drive motor model		TM-RFM	002C20	004C20	006C20	006E20	012E20	018E20
Motor outer diameter (frame dimensions)		[mm]	ø130			ø180		
Continuous running duty	Rated output	[W]	42	84	126	126	251	377
	Rated torque (Note 3)	[N•m]	2	4	6	6	12	18
Maximum torque		[N•m]	6	12	18	18	36	54
Rated speed		[r/min]	200					
Maximum speed		[r/min]	500					
Power rate at continuous rated torque		[kW/s]	3.7	9.6	16.1	4.9	12.9	21.8
Rated current		[A]	1.3	2.2	3.2	3.0	3.8	6.0
Maximum current		[A]	3.9	6.6	9.6	9.0	12	18
Moment of inertia J		[× 10^{-4} kg•m^2]	10.9	16.6	22.4	74.0	111	149
Recommended load to motor inertia ratio (Note 1)			50 times or less					
Absolute accuracy (Note 4)		[s]	±15			±12.5		
Speed/position detector			Absolute/incremental 20-bit encoder *1 (resolution: 1048576 pulses/rev)					
Type			Permanent magnet synchronous motor					
Thermistor			Built-in					
Insulation class			155 (F)					
Structure			Totally enclosed, natural cooling (IP rating: IP42) (Note 2)					
Vibration resistance *2		[m/s^2]	X: 49, Y: 49					
Vibration rank			V10 *4					
Rotor permissible load *3	Moment load	[N•m]	22.5			70		
	Axial load	[N]	1100			3300		
Mass		[kg]	5.2	6.8	8.4	11	15	18

Notes: 1. Contact your local sales office if the load to motor inertia ratio exceeds the value in the table.
2. Connectors and a gap along the rotor (output shaft) are excluded.
3. When unbalanced torque is generated, such as in a vertical lift machine, use the absolute position detection system, and keep the unbalanced torque under 70 % of the servo motor rated torque.
4. Absolute accuracy varies according to the mounting state of load and the surrounding environment.

Refer to "Annotations for Direct Drive Motor Specifications" on p. 6-11 in this catalog for the details about asterisks 1 to 4.

TM-RFM Series Specifications

Direct drive motor model		TM-RFM	012G20	048G20	072G20	040J10	120J10	240J10
Motor outer diameter (frame dimensions)		[mm]	ø230			ø330		
Continuous running duty	Rated output	[W]	251	1005	1508	419	1257	2513
	Rated torque (Note 3)	[N•m]	12	48	72	40	120	240
Maximum torque		[N•m]	36	144	216	120	360	720
Rated speed		[r/min]	200			100		
Maximum speed		[r/min]	500			200		
Power rate at continuous rated torque		[kW/s]	6.0	37.5	59.3	9.4	40.9	91.4
Rated current		[A]	3.6	11	16	4.3	11	19
Maximum current		[A]	11	33	48	13	33	57
Moment of inertia J		[× 10^{-4} kg•m^2]	238	615	875	1694	3519	6303
Recommended load to motor inertia ratio (Note 1)			50 times or less					
Absolute accuracy (Note 4)		[s]	±12.5			±10		
Speed/position detector			Absolute/incremental 20-bit encoder *1 (resolution: 1048576 pulses/rev)					
Type			Permanent magnet synchronous motor					
Thermistor			Built-in					
Insulation class			155 (F)					
Structure			Totally enclosed, natural cooling (IP rating: IP42) (Note 2)					
Vibration resistance *2		[m/s^2]	X: 49, Y: 49			X: 24.5, Y: 24.5		
Vibration rank			V10 *4					
Rotor permissible load *3	Moment load	[N•m]	93			350		
	Axial load	[N]	5500			16000		
Mass		[kg]	17	36	52	53	91	146

Notes: 1. Contact your local sales office if the load to motor inertia ratio exceeds the value in the table.
2. Connectors and a gap along the rotor (output shaft) are excluded.
3. When unbalanced torque is generated, such as in a vertical lift machine, use the absolute position detection system, and keep the unbalanced torque under 70 % of the servo motor rated torque.
4. Absolute accuracy varies according to the mounting state of load and the surrounding environment.

Refer to "Annotations for Direct Drive Motor Specifications" on p. 6-11 in this catalog for the details about asterisks 1 to 4.

TM-RFM Series Torque Characteristics

TM-RFM002C20 (Note 1, 2, 3)

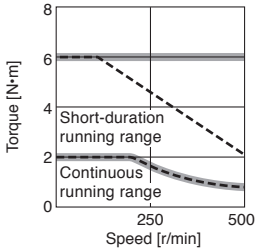

TM-RFM004C20 (Note 1, 2, 3)

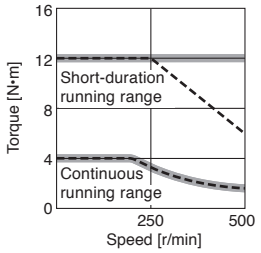

TM-RFM006C20 (Note 1, 2, 3)

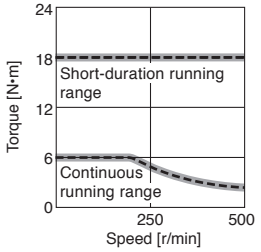

TM-RFM006E20 (Note 1, 2, 3)

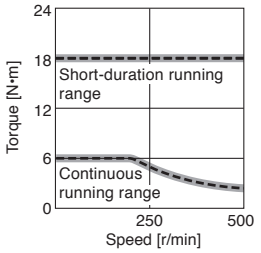

TM-RFM012E20 (Note 1, 2, 3)

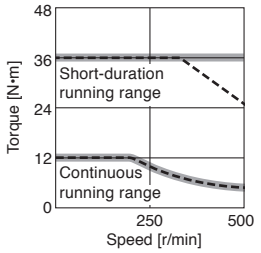

TM-RFM018E20 (Note 1, 2, 3)

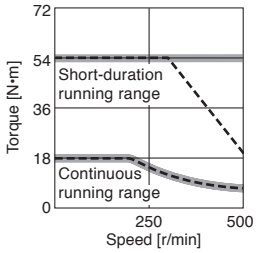

TM-RFM012G20 (Note 1, 2, 3)

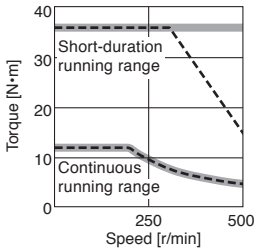

TM-RFM048G20 (Note 1, 3)

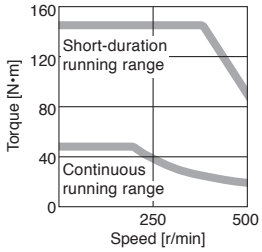

TM-RFM072G20 (Note 1, 3)

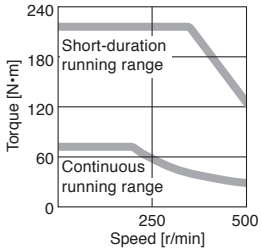

TM-RFM040J10 (Note 1, 2, 3)

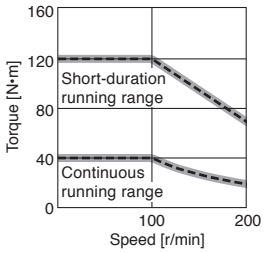

TM-RFM120J10 (Note 1, 3)

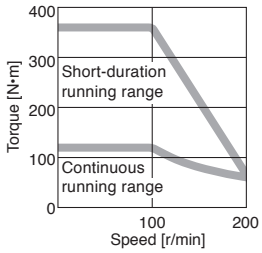

TM-RFM240J10 (Note 1, 3)

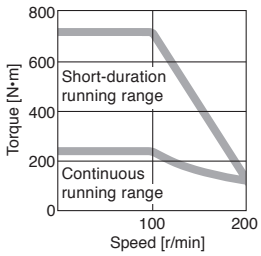

Notes: 1. ▬▬: For 3-phase 200 V AC or 1-phase 230 V AC
The following direct drive motors are compatible with 1-phase 230 V AC:
TM-RFM002C20, TM-RFM004C20, TM-RFM006C20, TM-RFM006E20, TM-RFM012E20, TM-RFM018E20, TM-RFM012G20, and TM-RFM040J10
2. - - - -: For 1-phase 200 V AC
3. Torque drops when the power supply voltage is below the specified value.

Direct Drive Motor Machine Accuracy

The machine accuracy related to the direct drive motor rotor (output shaft) and mounting is indicated below:

Item	Measuring position	Accuracy [mm]
Runout of flange surface about rotor (output shaft)	a	0.05
Runout of fitting outer diameter of flange surface	b	0.07
Runout of rotor (output shaft)	c	0.04
Runout of rotor (output shaft) end	d	0.02

●TM-RG2M series

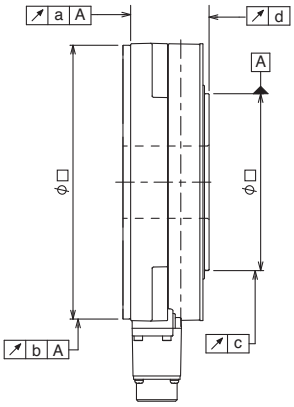

●TM-RU2M series

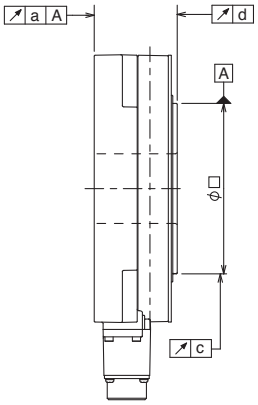

●TM-RFM series

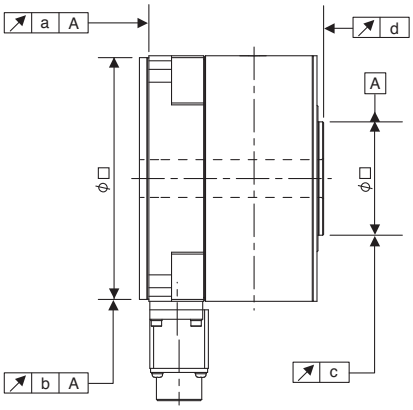

Power Supply Capacity

The power supply capacity of a servo amplifier is the same when used with either a 3-phase power supply input or a 1-phase power supply input.
When the servo motor runs at less than the rated speed, the power supply capacity is smaller than the value in the table.

Direct drive motor		Servo amplifier (Note 3)	Power supply capacity [kVA] (Note 1, 2)
TM-RG2M series/ TM-RU2M series	TM-RG2M002C30	MR-J5-20G/B/A MR-J5W2-22G/B, MR-J5W2-44G/B MR-J5W3-222G/B, MR-J5W3-444G/B	0.25
	TM-RU2M002C30		
	TM-RG2M004E30	MR-J5-20G/B/A MR-J5W2-22G/B MR-J5W3-222G/B	0.5
	TM-RU2M004E30		
	TM-RG2M004E30	MR-J5-40G/B/A MR-J5W2-44G/B MR-J5W3-444G/B	0.7
	TM-RU2M004E30		
	TM-RG2M009G30	MR-J5-40G/B/A MR-J5W2-44G/B, MR-J5W2-77G/B MR-J5W2-1010G/B MR-J5W3-444G/B	0.9
	TM-RU2M009G30		
TM-RFM series	TM-RFM002C20	MR-J5-20G/B/A MR-J5W2-22G/B, MR-J5W2-44G/B MR-J5W3-222G/B, MR-J5W3-444G/B	0.25
	TM-RFM004C20	MR-J5-40G/B/A MR-J5W2-44G/B, MR-J5W2-77G/B MR-J5W2-1010G/B MR-J5W3-444G/B	0.38
	TM-RFM006C20	MR-J5-60G/B/A MR-J5W2-77G/B, MR-J5W2-1010G/B	0.53
	TM-RFM006E20	MR-J5-60G/B/A MR-J5W2-77G/B, MR-J5W2-1010G/B	0.46
	TM-RFM012E20	MR-J5-70G/B/A MR-J5W2-77G/B, MR-J5W2-1010G/B	0.81
	TM-RFM018E20	MR-J5-100G/B/A MR-J5W2-1010G/B	1.3
	TM-RFM012G20	MR-J5-70G/B/A MR-J5W2-77G/B, MR-J5W2-1010G/B	0.71
	TM-RFM048G20	MR-J5-350G/B/A	2.7
	TM-RFM072G20	MR-J5-350G/B/A	3.8
	TM-RFM040J10	MR-J5-70G/B/A MR-J5W2-77G/B, MR-J5W2-1010G/B	1.2
	TM-RFM120J10	MR-J5-350G/B/A	3.4
	TM-RFM240J10	MR-J5-500G/B/A	6.6

Notes: 1. The power supply capacity varies depending on the power supply impedance.
2. The listed values are the power supply capacity for one servo motor. For the multi-axis servo amplifiers, calculate the power supply capacity with the equation below:
Power supply capacity [kVA] = Sum of power supply capacity [kVA] of the connected servo motors
3. Note that the power supply capacity for servo amplifiers with special specifications is the same as that for standard servo amplifiers. Refer to the servo amplifiers with the same rated output.

Annotations for Direct Drive Motor Specifications

*1. Connect the following options for absolute position detection system.
• MR-J5-G_/MR-J5-B_/MR-J5-A_: battery (MR-BAT6V1SET or MR-BAT6V1SET-A) and absolute position storage unit (MR-BTAS01)
• MR-J5W_: battery case (MR-BT6VCASE), battery (MR-BAT6V1) × 5 pcs., and absolute position storage unit (MR-BTAS01)
Refer to "MR-J5 User's Manual" for details.

*2. The vibration direction is shown in the diagram below. The numerical value indicates the maximum value of the component.
Fretting tends to occur on the bearing when the direct drive motor stops. Thus, maintain vibration level at approximately one-half of the allowable value.

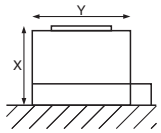

*3. The following is calculation examples of axial and moment loads to the rotor (output shaft) of the direct drive motor. The axial and moment loads must be maintained equal to or below the permissible value.

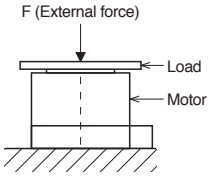

Axial load
= F + Load mass

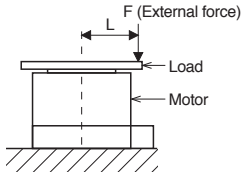

Axial load
= F + Load mass
Moment load
= F × L

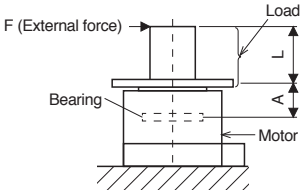

Axial load = Load mass
Moment load = F × (L + A)

Motor outer diameter [mm] (Frame dimensions)	Dimension A [mm]	
	TM-RG2M series TM-RU2M series	TM-RFM series
ø130	20.6	19.1
ø180	20.7	20.2
ø230	18.0	24.4
ø330	-	32.5

*4. V10 indicates that the amplitude of the direct drive motor itself is 10 μm or less. The following shows mounting orientation and measuring position of the direct drive motor during the measurement:

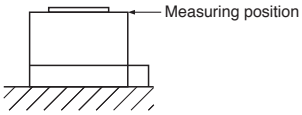

TM-RG2M Series Dimensions (Note 1, 2)

●TM-RG2M002C30

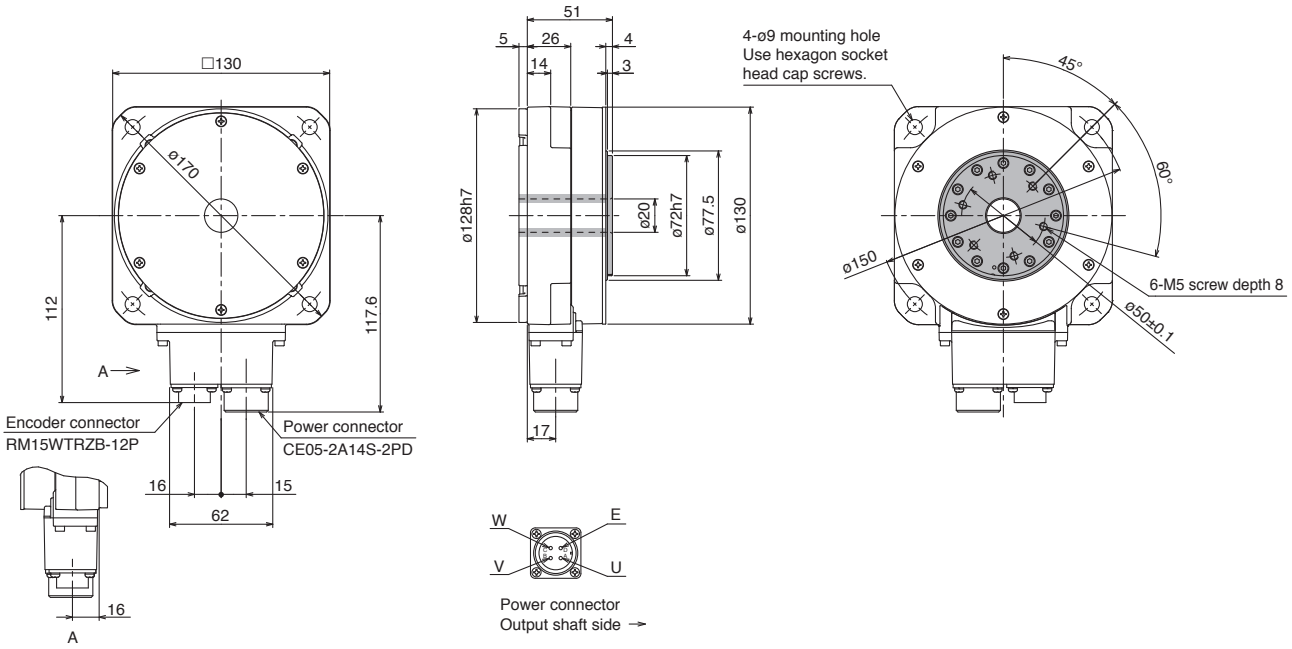

[Unit: mm]

●TM-RG2M004E30

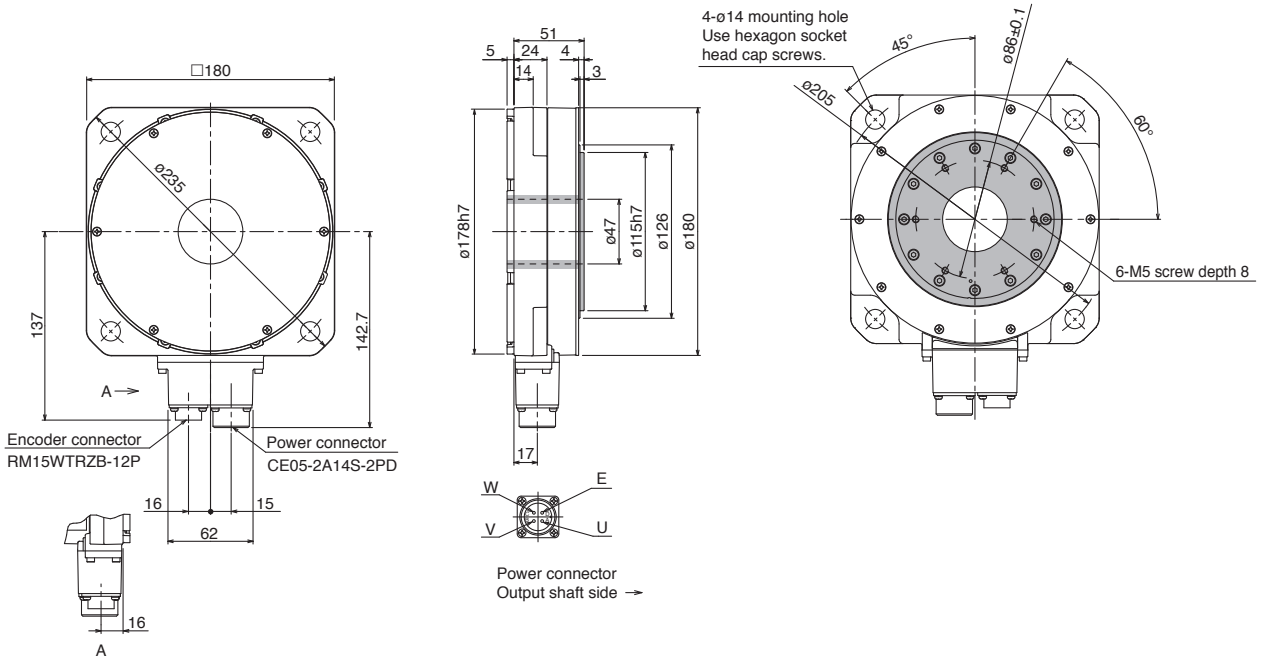

[Unit: mm]

Notes: 1. General tolerances are applied to the dimensions in which tolerances are not given in the drawing.
2. ▒ indicates rotor.

TM-RG2M Series Dimensions (Note 1, 2)

●TM-RG2M009G30

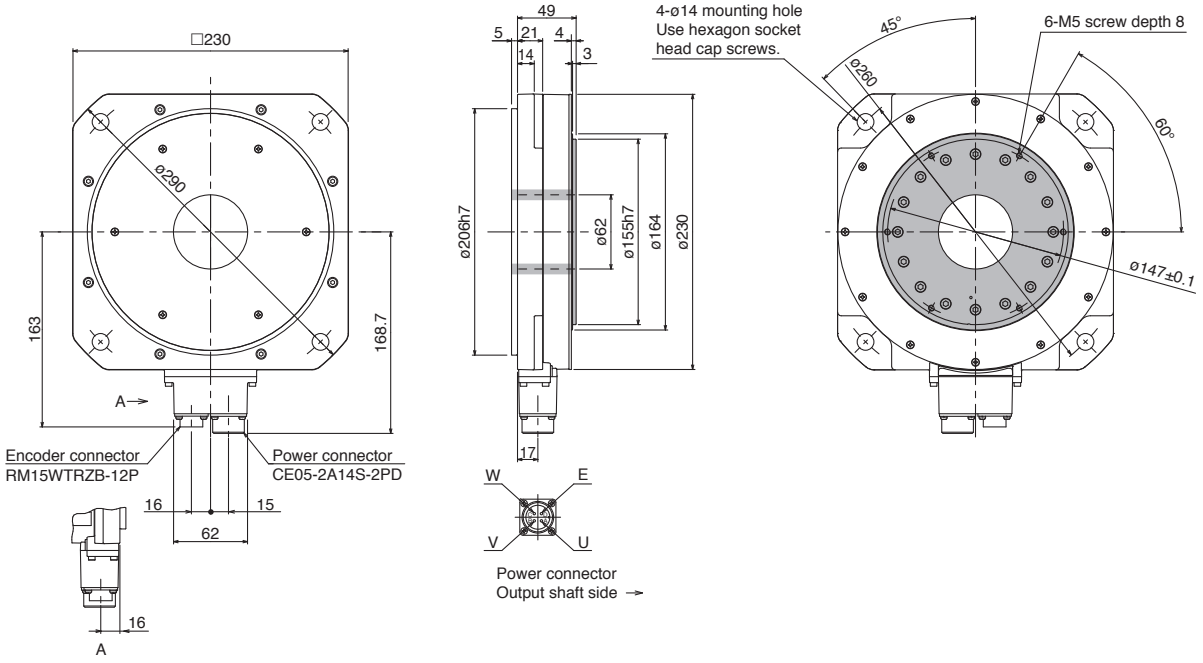

[Unit: mm]

Notes: 1. General tolerances are applied to the dimensions in which tolerances are not given in the drawing.
2. ▒ indicates rotor.

TM-RU2M Series Dimensions (Note 1, 2)

●TM-RU2M002C30

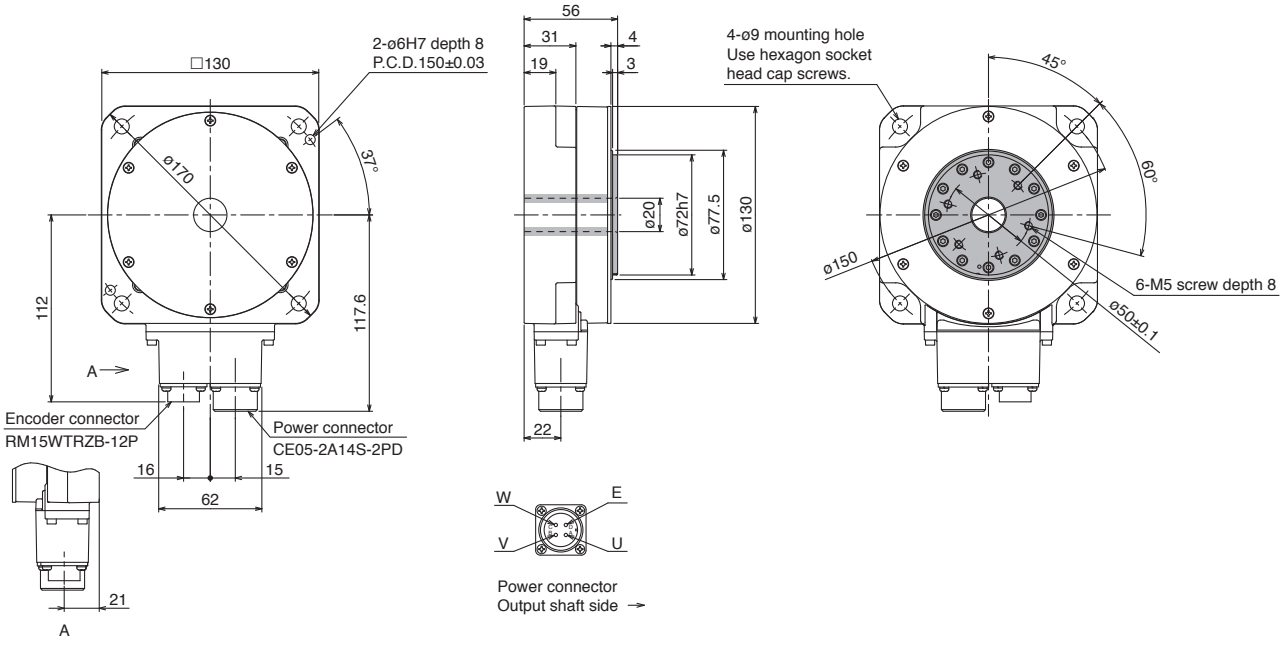

[Unit: mm]

●TM-RU2M004E30

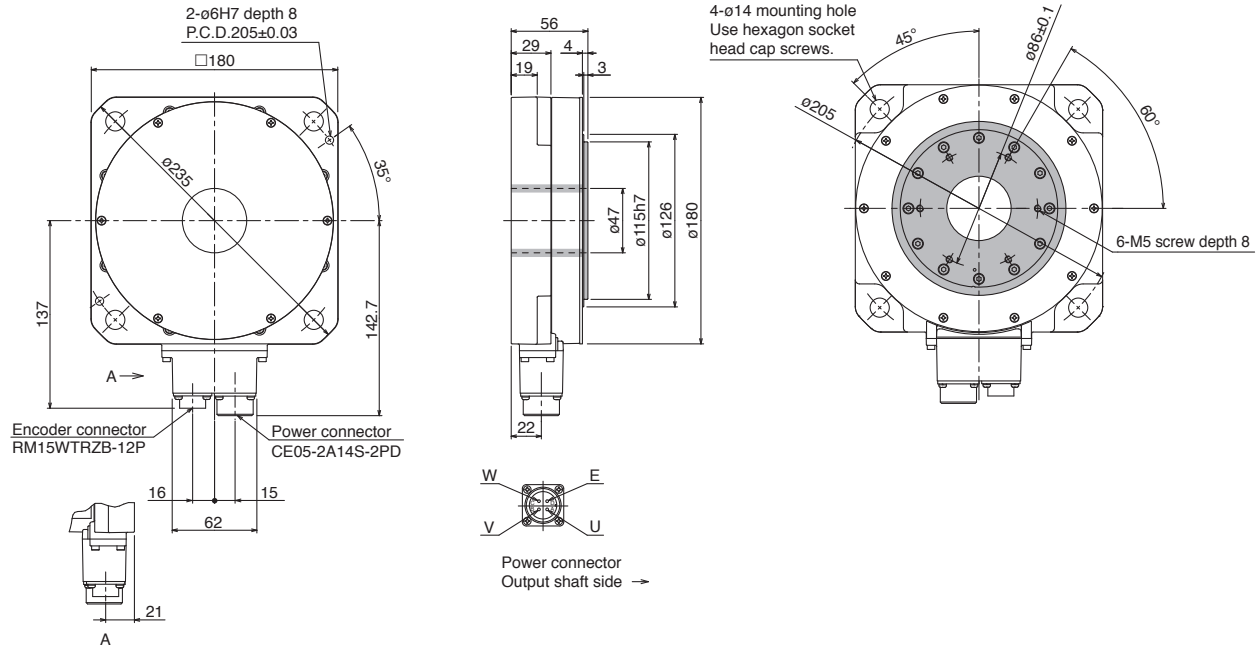

[Unit: mm]

Notes: 1. General tolerances are applied to the dimensions in which tolerances are not given in the drawing.
2. ▒ indicates rotor.

TM-RU2M Series Dimensions (Note 1, 2)

●TM-RU2M009G30

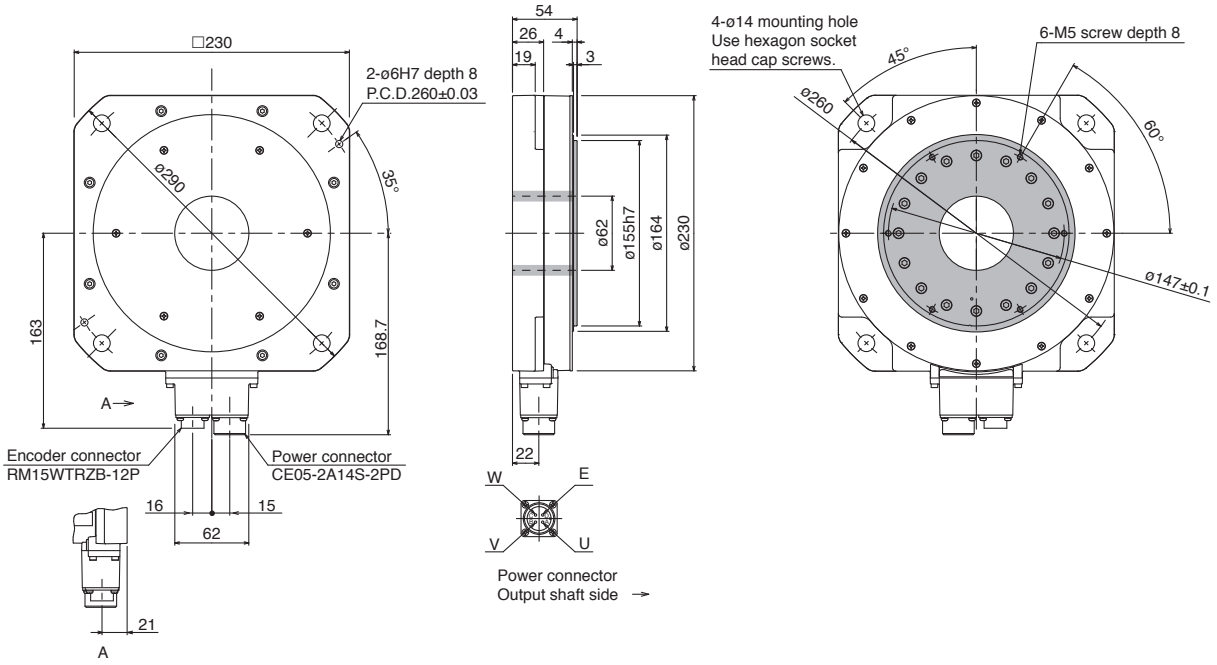

[Unit: mm]

Notes: 1. General tolerances are applied to the dimensions in which tolerances are not given in the drawing.
2. ▒ indicates rotor.

TM-RFM Series Dimensions (Note 1, 2)

●TM-RFM002C20, TM-RFM004C20, TM-RFM006C20

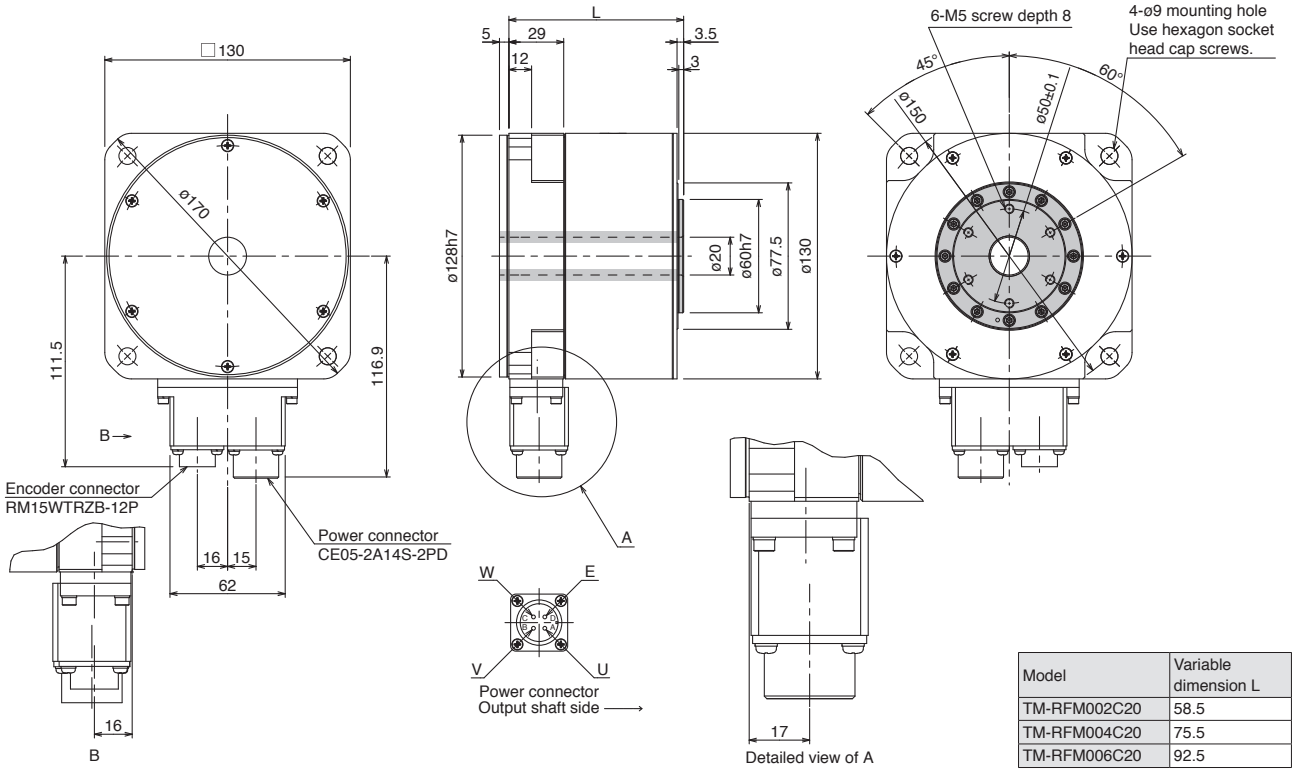

Model	Variable dimension L
TM-RFM002C20	58.5
TM-RFM004C20	75.5
TM-RFM006C20	92.5

[Unit: mm]

●TM-RFM006E20, TM-RFM012E20, TM-RFM018E20

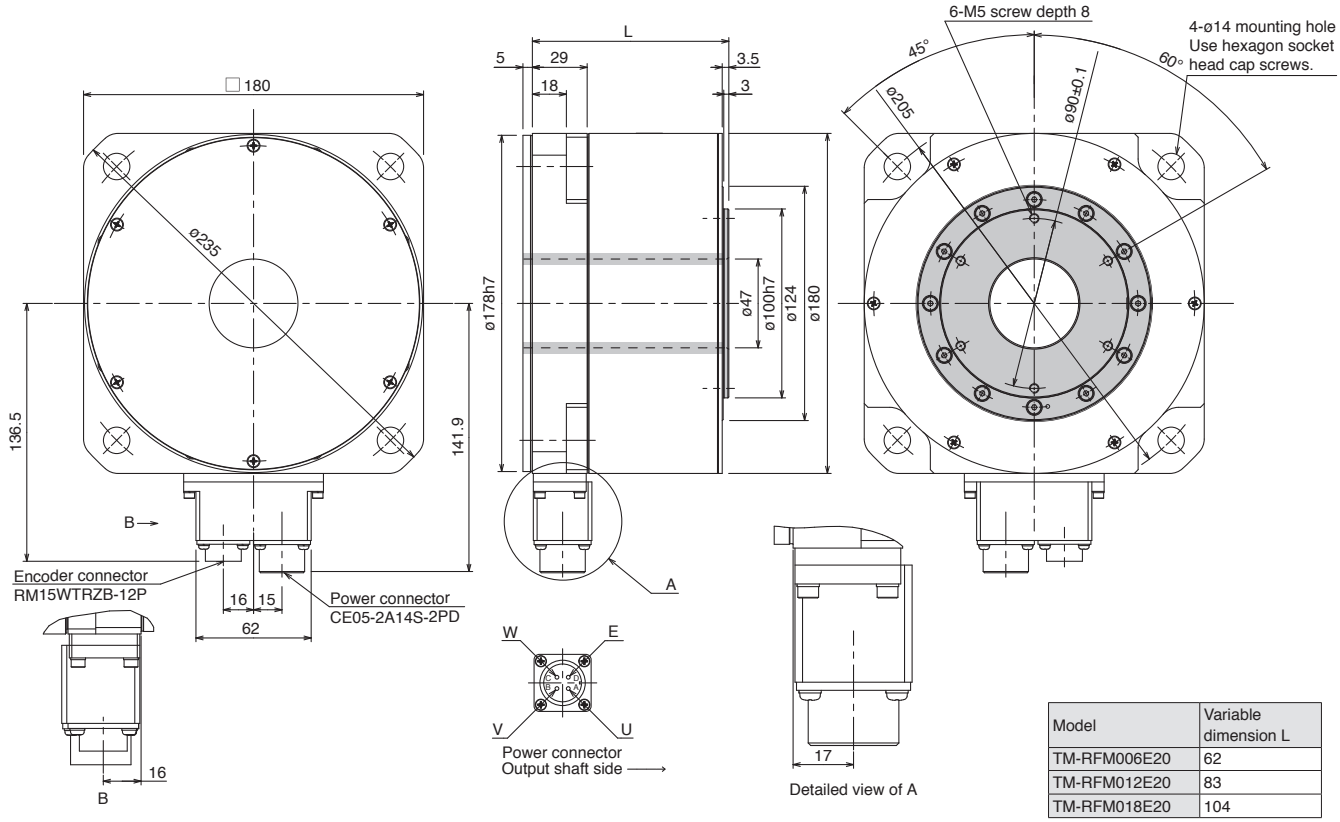

Model	Variable dimension L
TM-RFM006E20	62
TM-RFM012E20	83
TM-RFM018E20	104

[Unit: mm]

Notes: 1. General tolerances are applied to the dimensions in which tolerances are not given in the drawing. The actual dimensions may be 1 mm to 3 mm larger than the dimensions indicated. Make allowances for the tolerance when designing a machine.
2. ▒ indicates rotor.

TM-RFM Series Dimensions (Note 1, 2)

●TM-RFM012G20, TM-RFM048G20, TM-RFM072G20

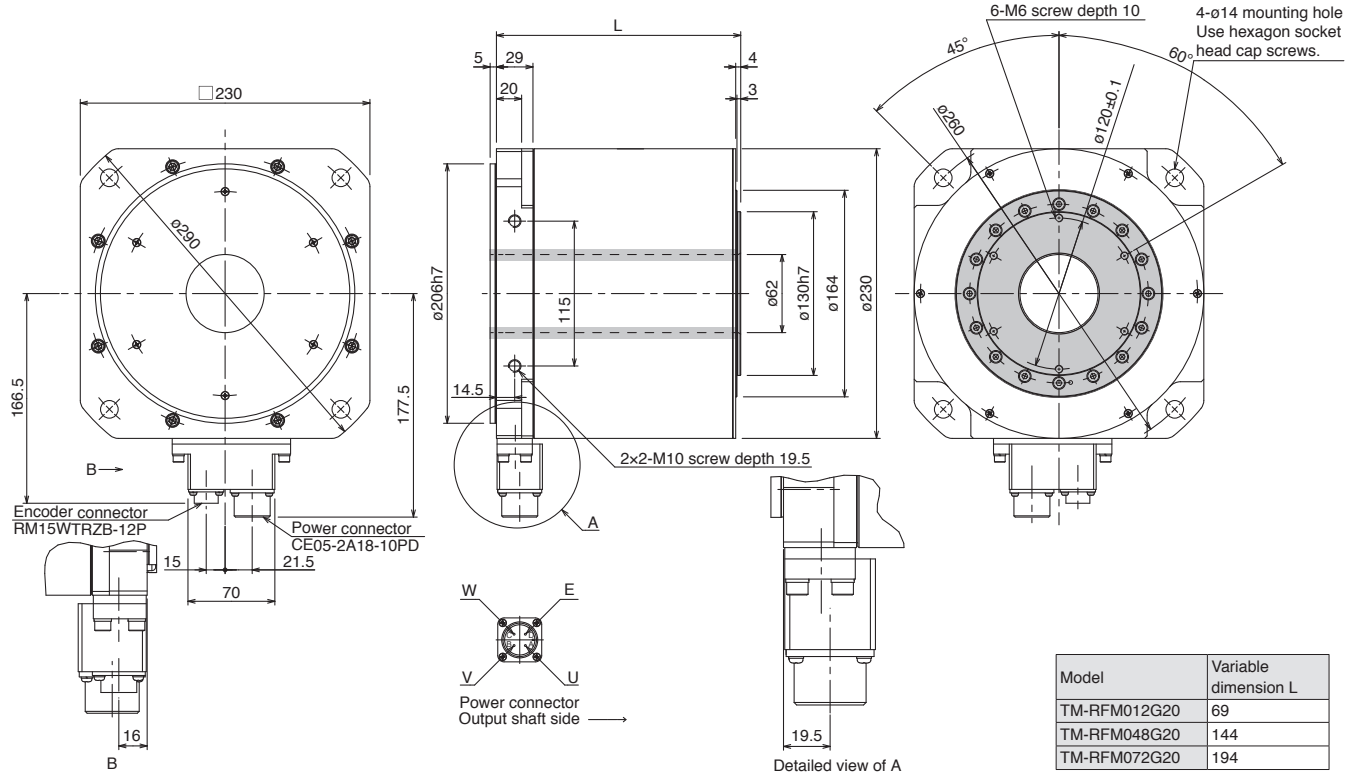

Model	Variable dimension L
TM-RFM012G20	69
TM-RFM048G20	144
TM-RFM072G20	194

[Unit: mm]

●TM-RFM040J10, TM-RFM120J10, TM-RFM240J10

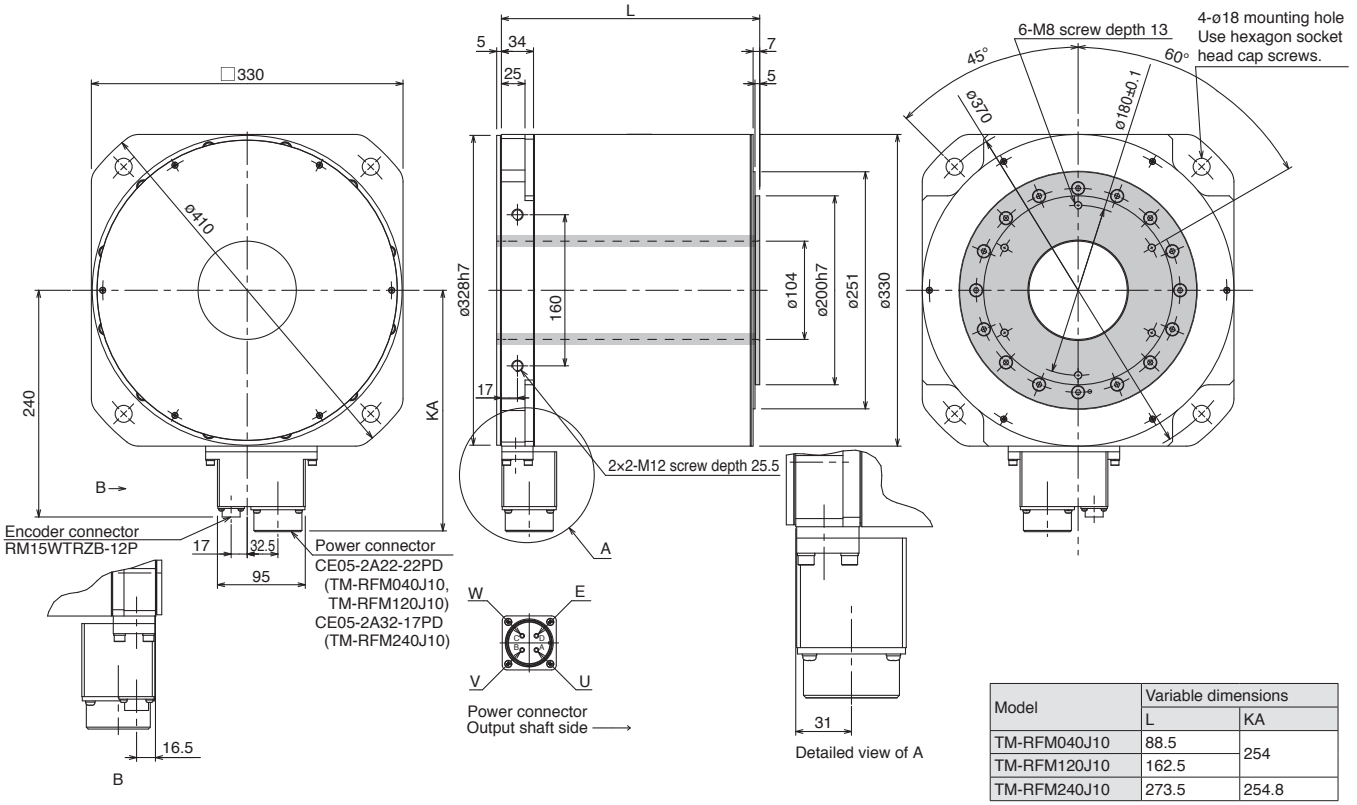

Model	Variable dimensions	
	L	KA
TM-RFM040J10	88.5	254
TM-RFM120J10	162.5	
TM-RFM240J10	273.5	254.8

[Unit: mm]

Notes: 1. General tolerances are applied to the dimensions in which tolerances are not given in the drawing. The actual dimensions may be 1 mm to 3 mm larger than the dimensions indicated. Make allowances for the tolerance when designing a machine.
2. ▭ indicates rotor.

MEMO

7 Options/Peripheral Equipment

	Servo amplifier										
	G	G-HS	G-RJ	WG	DG	B	B-RJ	WB	A	A-RJ	● : Applicable
Introducing FA Integrated Selection Tool	●	●	●	●	●	●	●	●	●	●	 7-3
Cable and Connector Selection Table for Servo Motors	●	●	●	●	●	●	●	●	●	●	 7-3
Configuration Example for Servo Motors	●	●	●	●	●	●	●	●	●	●	 7-5
Details of Option Connectors for Servo Motors	●	●	●	●	●	●	●	●	●	●	 7-22
Products on the Market for Servo Motors	●	●	●	●	●	●	●	●	●	●	 7-27
Configuration Example for MR-J5-_G-HS		●									 7-35
Configuration Example for MR-J5-_G(-RJ)	●		●								 7-35
Configuration Example for MR-J5W_-_G				●							 7-36
Configuration Example for MR-J5D_-_G4					●						 7-37
Ethernet Cable Specifications	●	●	●	●	●						 7-37
Configuration Example for MR-J5-_B(-RJ)						●	●				 7-38
Configuration Example for MR-J5W_-_B								●			 7-38
Configuration Example for MR-J5-_A(-RJ)									●	●	 7-39
Bus Bar					●						 7-44
Configuration Example for MR-CM	●		●	●		●	●	●	●	●	 7-45
Configuration Example for MR-J3-D05	●		●	●	●	●	●	●	●	●	 7-46
Details of Option Connectors for Servo Amplifiers/MR-CM/MR-J3-D05	●	●	●	●	●	●	●	●	●	●	 7-47
Products on the Market for Servo Amplifiers	●	●	●	●	●	●	●	●	●	●	 7-51
Safety Logic Unit	●		●	●	●	●	●	●	●	●	 7-55
Regenerative Option	●	●	●	●		●	●	●	●	●	 7-57
Multifunction Regeneration Converter	●	●	●			●	●		●	●	 7-61
Dynamic Brake	●	●				●	●		●	●	 7-63
Battery and Battery Case	●		●	●		●	●	●	●	●	 7-64
Absolute Position Storage Unit	●		●	●		●	●	●	●	●	 7-66
Replacement Fan Unit	●	●	●	●	●	●	●	●	●	●	 7-66
Cabinet-Mounting Attachment	●		●	●		●	●	●	●	●	 7-67
Grounding Terminal Attachment	●		●			●	●		●	●	 7-67
Shield Clamp Attachment	●	●				●	●		●	●	 7-68
Panel Through Attachment	●	●				●	●		●	●	 7-68

	Servo amplifier										
	G	G-HS	G-RJ	WG	DG	B	B-RJ	WB	A	A-RJ	● : Applicable
Mounting Attachment					●						 7-69
Side Protection Cover					●						 7-69
Junction Terminal Block	●		●	●		●	●	●	●	●	 7-70
Radio Noise Filter/Line Noise Filter/Data Line Filter	●	●	●	●	●	●	●	●	●	●	 7-72
Surge Killer	●	●	●	●	●	●	●	●	●	●	 7-72
EMC Filter	●	●	●	●	●	●	●	●	●	●	 7-73
Surge Protector	●	●	●	●	●	●	●	●	●	●	 7-77
Power Factor Improving DC Reactor	●	●	●	●	●	●	●	●	●	●	 7-78
Power Factor Improving AC Reactor	●	●	●	●	●	●	●	●	●	●	 7-83
AC Reactor					●						 7-87
Motorizer/MR Configurator2	●	●	●	●	●	●	●	●	●	●	 7-88
Unit Conversion Table	●	●	●	●	●	●	●	●	●	●	 7-90

G MR-J5-G(-N1) **G-HS** MR-J5-G-HS(N1) **G-RJ** MR-J5-G-RJ(N1) **WG** MR-J5W2-G(-N1)/MR-J5W3-G(-N1)
DG MR-J5D1-G4(-N1)/MR-J5D2-G4(-N1)/MR-J5D3-G4(-N1) **B** MR-J5-B **B-RJ** MR-J5-B-RJ **WB** MR-J5W2-B/MR-J5W3-B
A MR-J5-A **A-RJ** MR-J5-A-RJ

* Note that options/peripheral equipment necessary for servo amplifiers or drive units with special specifications are the same as those for standard servo amplifiers or standard drive units. Refer to the servo amplifiers or drive units with the same rated output.
* Refer to p. 7-90 in this catalog for conversion of units.
* In this section, a term of servo amplifier includes a combination of a drive unit and a converter unit.

Introducing FA Integrated Selection Tool

FA Integrated Selection Tool is now available, so you can select options such as encoder cables and power cables which are required to use with controllers, servo motors, servo amplifiers, and regenerative options of your choice.



Cable and Connector Selection Table for Servo Motors

Necessary option cables and connectors vary depending on the servo motor series.
Refer to the following tables for necessary options.

Cables for HK-KT series/HK-MT series/HK-RT (1.0 kW to 2.0 kW) series servo motors

Cable type	Cable length	IP rating (Note 1)	Electromagnetic brake wires	Cable direction	Bending life (Note 5)	Model	Reference
Dual cable type	10 m or shorter (direct connection type)	IP65 (Note 3)	Available	In the direction of the load side	Long bending life	MR-AEPB2CBL_M-A1-H	p. 7-8
					Standard	MR-AEPB2CBL_M-A1-L	
				In the opposite direction of the load side	Long bending life	MR-AEPB2CBL_M-A2-H	
					Standard	MR-AEPB2CBL_M-A2-L	
				Vertical (Note 4)	Long bending life	MR-AEPB2CBL_M-A5-H	
					Standard	MR-AEPB2CBL_M-A5-L	
			Not available	In the direction of the load side	Long bending life	MR-AEP2CBL_M-A1-H	
					Standard	MR-AEP2CBL_M-A1-L	
				In the opposite direction of the load side	Long bending life	MR-AEP2CBL_M-A2-H	
					Standard	MR-AEP2CBL_M-A2-L	
				Vertical (Note 4)	Long bending life	MR-AEP2CBL_M-A5-H	
					Standard	MR-AEP2CBL_M-A5-L	
	Over 10 m (junction type) (Note 2)	IP20	Available	In the direction of the load side	Long bending life	MR-AEPB2J10CBL03M-A1-L, MR-AEKCBL_M-H	p. 7-9
					Standard	MR-AEPB2J10CBL03M-A1-L, MR-AEKCBL_M-L	
				In the opposite direction of the load side	Long bending life	MR-AEPB2J10CBL03M-A2-L, MR-AEKCBL_M-H	
					Standard	MR-AEPB2J10CBL03M-A2-L, MR-AEKCBL_M-L	
				Vertical (Note 4)	Long bending life	MR-AEPB2J10CBL03M-A5-L, MR-AEKCBL_M-H	
					Standard	MR-AEPB2J10CBL03M-A5-L, MR-AEKCBL_M-L	
			Not available	In the direction of the load side	Long bending life	MR-AEP2J10CBL03M-A1-L, MR-AEKCBL_M-H	
					Standard	MR-AEP2J10CBL03M-A1-L, MR-AEKCBL_M-L	
				In the opposite direction of the load side	Long bending life	MR-AEP2J10CBL03M-A2-L, MR-AEKCBL_M-H	
					Standard	MR-AEP2J10CBL03M-A2-L, MR-AEKCBL_M-L	
				Vertical (Note 4)	Long bending life	MR-AEP2J10CBL03M-A5-L, MR-AEKCBL_M-H	
					Standard	MR-AEP2J10CBL03M-A5-L, MR-AEKCBL_M-L	
		IP65 (Note 3)	Available	In the direction of the load side	Long bending life	MR-AEPB2J20CBL03M-A1-L, MR-AENSCBL_M-H	pp. 7-10 and 7-11
					Standard	MR-AEPB2J20CBL03M-A1-L, MR-AENSCBL_M-L	
				In the opposite direction of the load side	Long bending life	MR-AEPB2J20CBL03M-A2-L, MR-AENSCBL_M-H	
					Standard	MR-AEPB2J20CBL03M-A2-L, MR-AENSCBL_M-L	
				Vertical (Note 4)	Long bending life	MR-AEPB2J20CBL03M-A5-L, MR-AENSCBL_M-H	
					Standard	MR-AEPB2J20CBL03M-A5-L, MR-AENSCBL_M-L	
			Not available	In the direction of the load side	Long bending life	MR-AEP2J20CBL03M-A1-L, MR-AENSCBL_M-H	
					Standard	MR-AEP2J20CBL03M-A1-L, MR-AENSCBL_M-L	
				In the opposite direction of the load side	Long bending life	MR-AEP2J20CBL03M-A2-L, MR-AENSCBL_M-H	
					Standard	MR-AEP2J20CBL03M-A2-L, MR-AENSCBL_M-L	
				Vertical (Note 4)	Long bending life	MR-AEP2J20CBL03M-A5-L, MR-AENSCBL_M-H	
					Standard	MR-AEP2J20CBL03M-A5-L, MR-AENSCBL_M-L	

Notes: 1. The IP rating indicated is for the connector's protection against ingress of dust and water when coupled to a servo motor. If the IP rating of the servo motor differs from that of these connectors, overall IP rating depends on the lowest of all.
2. The two types of cables indicated are required.
3. When IP67 cables are required, please contact Mitsubishi Electric System & Service Co., Ltd. OVERSEAS SERVICE SECTION. (Email: osb.webmaster@melsc.jp)
4. The vertical cable should be attached to the servo motor with the locking lever facing the load side.
5. Long bending life cables and standard cables are for moving parts and fixed parts respectively.

Cable and Connector Selection Table for Servo Motors

Cables for HK-KT series/HK-MT series/HK-RT (1.0 kW to 2.0 kW) series servo motors

Cable type	Cable length	IP rating (Note 1)	Electromagnetic brake wires	Cable direction	Bending life (Note 5)	Model	Reference
Single cable type	10 m or shorter (direct connection type)	IP65 (Note 3)	Available	In the direction of the load side	Long bending life	MR-AEPB1CBL_M-A1-H	p. 7-12
					Standard	MR-AEPB1CBL_M-A1-L	
				In the opposite direction of the load side	Long bending life	MR-AEPB1CBL_M-A2-H	
					Standard	MR-AEPB1CBL_M-A2-L	
				Vertical (Note 4)	Long bending life	MR-AEPB1CBL_M-A5-H	
					Standard	MR-AEPB1CBL_M-A5-L	
			Not available	In the direction of the load side	Long bending life	MR-AEP1CBL_M-A1-H	
					Standard	MR-AEP1CBL_M-A1-L	
				In the opposite direction of the load side	Long bending life	MR-AEP1CBL_M-A2-H	
					Standard	MR-AEP1CBL_M-A2-L	
				Vertical (Note 4)	Long bending life	MR-AEP1CBL_M-A5-H	
					Standard	MR-AEP1CBL_M-A5-L	

Cables for HK-ST series/HK-RT (3.5 kW to 7.0 kW) series servo motors

Application	Compatible servo motor	IP rating (Note 1)	Bending life (Note 5)	Length	Model	Reference
Encoder	HK-ST series HK-RT353(4)W, 503(4)W, 703(4)W	IP67	Long bending life	2 m to 10 m	MR-J3ENSCBL_M-H	p. 7-11
				20 m to 50 m	MR-AENSCBL_M-H	
			Standard	2 m to 10 m	MR-J3ENSCBL_M-L	
				20 m to 30 m	MR-AENSCBL_M-L	

Connectors for HK-ST series/HK-RT (3.5 kW to 7.0 kW) series/HK-JT series servo motors

Application	Compatible servo motor	IP rating (Note 1)	Connector shape	Type of connection	Model (Note 2)	Reference
Encoder	HK-ST series HK-RT353(4)W, 503(4)W, 703(4)W HK-JT701M(4)J, 11K1M(4)J, 15K1M(4)J	IP67	Straight	One-touch	MR-J3SCNS	p. 7-11
				Screw	MR-ENCNS2	p. 7-13
			Angle	One-touch	MR-J3SCNSA	
				Screw	MR-ENCNS2A	
	HK-JT15K1J, 22K1M(4)J	IP67	Straight	Screw	MR-ENECNS	
Power supply (Note 6)	HK-ST52(4)(W), 102(4)(W), 172(4)W, 202(4)AW, 302(4)W, 353(4)W, 503(4)W	IP67	Straight	One-touch	MR-APWCNS4	p. 7-13
	HK-ST7M2UW, 172UW, 202(4)(W), 352(4)(W), 502(4)(W), 702(4)(W) HK-RT353(4)W, 503(4)W, 703(4)W			One-touch	MR-APWCNS5	
	HK-JT701M(4)J, 11K1M(4)J, 15K1M(4)J	IP67	Straight	One-touch	MR-APWCNS3	
Electromagnetic brake	HK-ST series HK-RT353(4)WB, 503(4)WB, 703(4)WB	IP67	Straight	One-touch	MR-BKCNS1	p. 7-14
				Screw	MR-BKCNS2	
			Angle	One-touch	MR-BKCNS1A	
				Screw	MR-BKCNS2A	
	HK-JT701M(4)J, 11K1M(4)J, 15K1M(4)J	IP67	Straight	Screw	MR-BKCN	
Cooling fan	HK-JT15K1J, 22K1M(4)J	IP67	Straight	Screw	MR-PWCNF	

Notes: 1. The IP rating indicated is for the connector's protection against ingress of dust and water when coupled to a servo motor. If the IP rating of the servo motor differs from that of these connectors, overall IP rating depends on the lowest of all.
2. Use the option connector set indicated to fabricate a cable.
3. When IP67 cables are required, please contact Mitsubishi Electric System & Service Co., Ltd. OVERSEAS SERVICE SECTION. (Email: osb.webmaster@melsc.jp)
4. The vertical cable should be attached to the servo motor with the locking lever facing the load side.
5. Long bending life cables and standard cables are for moving parts and fixed parts respectively.
6. Connectors for HK-ST152(4)G1/G1H/G5/G7 geared servo motors are the same as those for HK-ST172(4)W.

Configuration Example for Rotary Servo Motors (Note 2)

G | G-HS | G-RJ | WG | DG | B | B-RJ | WB | A | A-RJ

HK-KT series/HK-MT series/HK-RT (1.0 kW to 2.0 kW) series
(Cable direction: load side/opposite to load side/vertical) (Note 4, 5)

●Cable length of 10 m or shorter

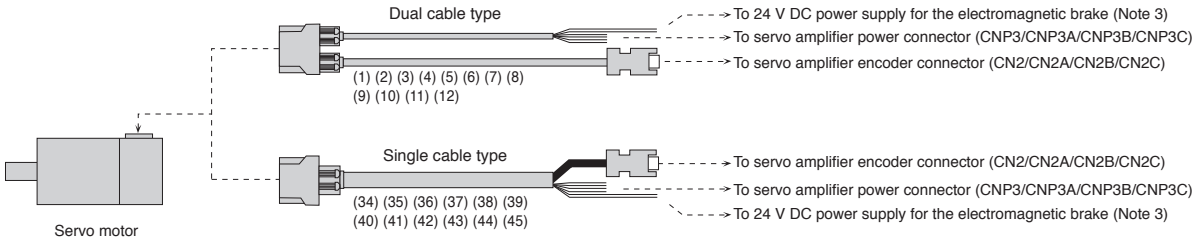

●Cable length of over 10 m

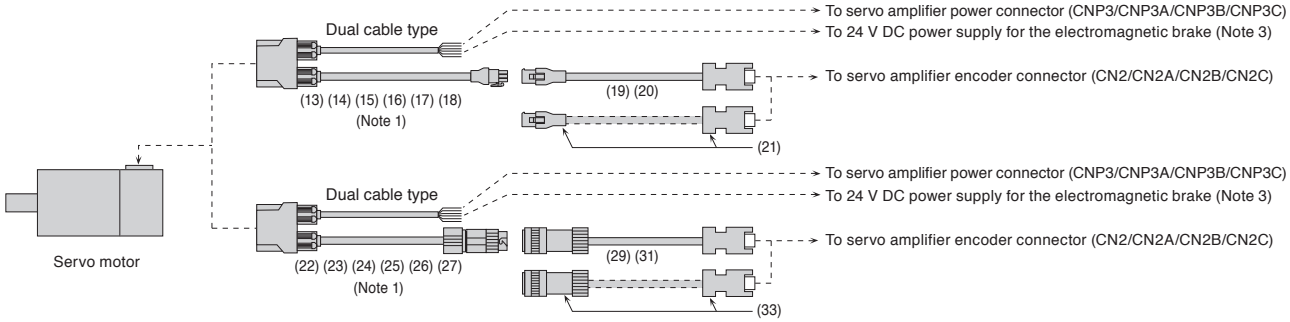

HK-ST series/HK-RT (3.5 kW to 7.0 kW) series

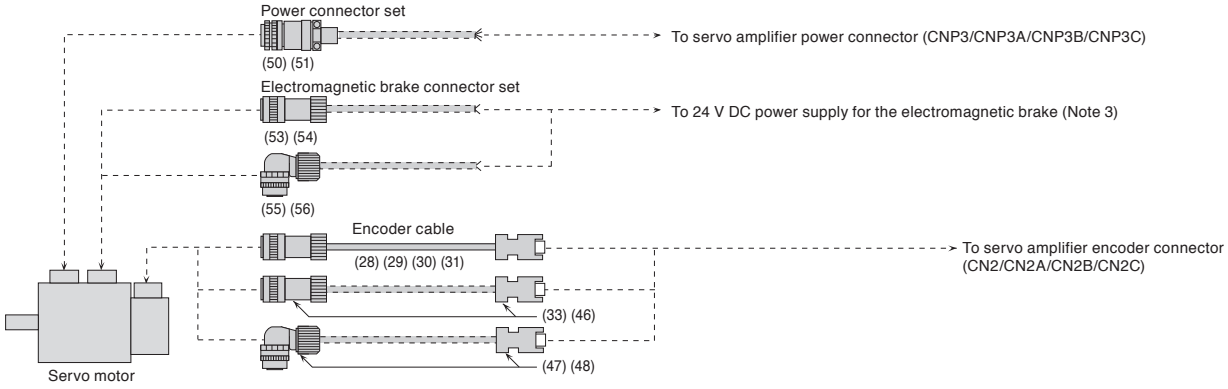

Notes: 1. Secure this cable as it does not have a long bending life.
2. Cables drawn with dashed lines need to be fabricated by users. Refer to "Rotary Servo Motor User's Manual (For MR-J5)" when fabricating the cables.
3. This is for the servo motors with an electromagnetic brake.
4. The vertical cable should be attached to the servo motor with the locking lever facing the load side.
5. The cable direction in the configuration examples is in the opposite direction to the load side.
Cables can be led out in the direction of the load side, the opposite to the load side, and vertical, depending on the option to be used.
These cable directions are shown below.

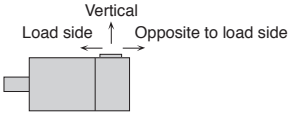

Configuration Example for Rotary Servo Motors (Note 1)

G | G-HS | B | B-RJ | A | A-RJ

HK-JT 1500 r/min (7 kW to 15 kW) series

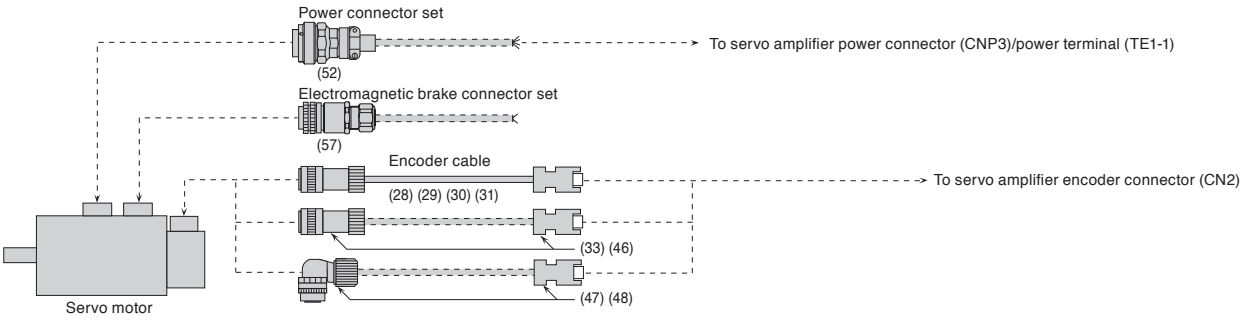

HK-JT 1000 r/min (15 kW) series/HK-JT 1500 r/min (22 kW) series

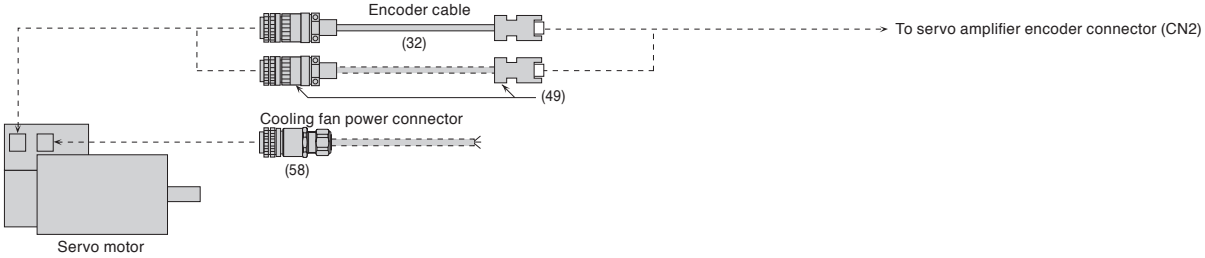

Notes: 1. Cables drawn with dashed lines need to be fabricated by users. Refer to "Rotary Servo Motor User's Manual (For MR-J5)" when fabricating the cables.

Configuration Example for Rotary Servo Motors (Note 2)

For fully closed loop control (Note 5)
(MR-J5-G_/MR-J5W2-G/MR-J5D2-G4/MR-J5-B_/MR-J5W2-B/MR-J5-A_ and rotary servo motors) (Note 3)

G WG DG B WB A

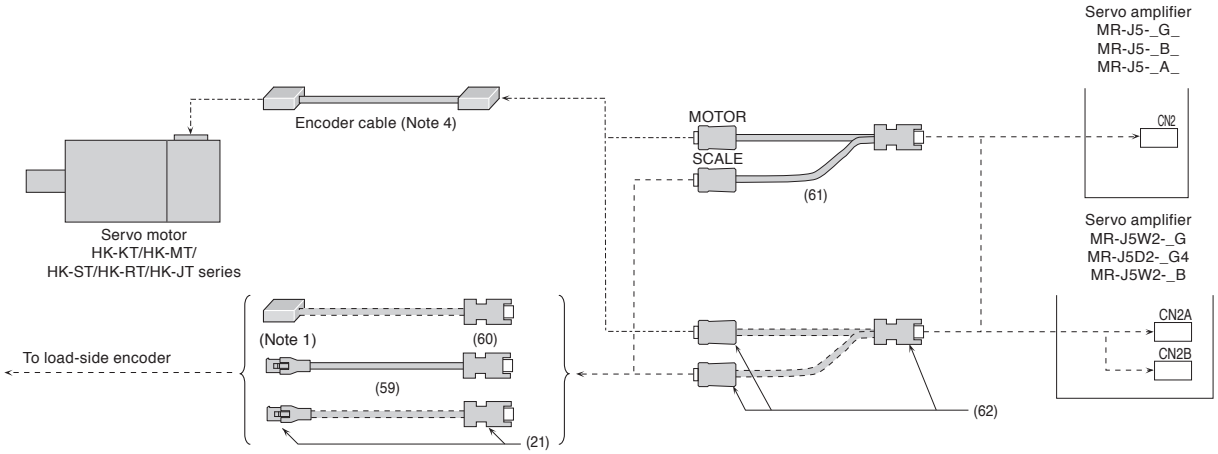

For fully closed loop control (Note 5)
(MR-J5-G_-HS/MR-J5-G_-RJ/MR-J5D1-G4/MR-J5-B_-RJ/MR-J5-A_-RJ and rotary servo motors) (Note 3)

G-HS G-RJ DG B-RJ A-RJ

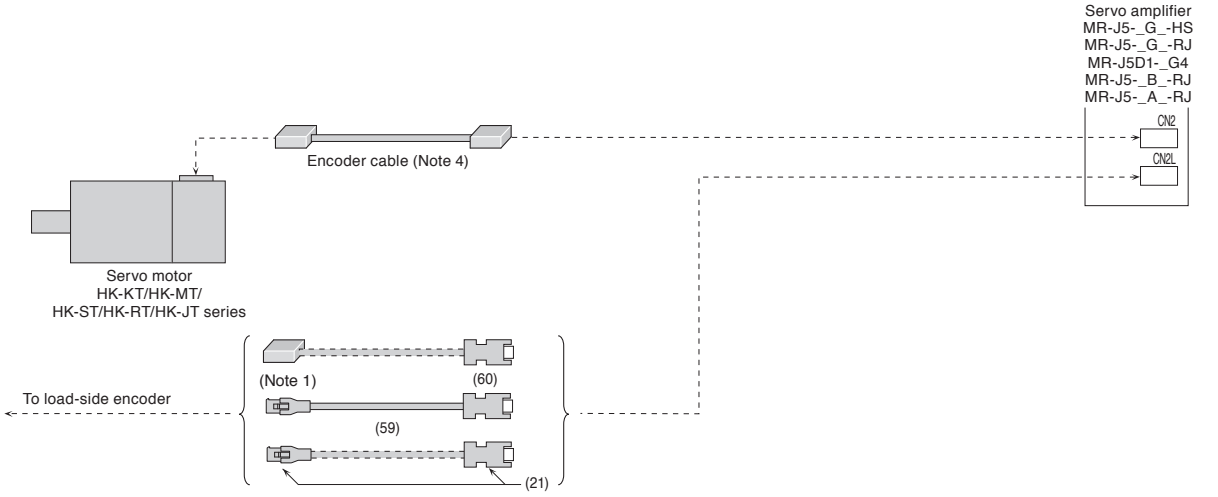

Notes: 1. Contact the relevant linear encoder manufacturers for connectors to connect with the head cables.
2. Cables drawn with dashed lines need to be fabricated by users. Refer to "Rotary Servo Motor User's Manual (For MR-J5)" when fabricating the cables.
3. Connections other than mentioned are the same as those for each rotary servo motor. Refer to cables and connectors for relevant servo motors in this catalog.
4. Necessary encoder cables vary depending on the servo motor series. Refer to cables and connectors for relevant servo motors in this catalog.
5. For connections when an A/B/Z-phase differential output linear encoder is used, refer to "MR-J5 Partner's Encoder User's Manual".
Refer to the manual when fabricating the branch cables to connect an A/B/Z-phase differential output linear encoder.

Cables and Connectors for Rotary Servo Motors

Refer to "Details of Option Connectors for Servo Motors" in this catalog for the detailed models.

No.	Item	Application	Bending life (Note 4)	Cable length	Model	Description/IP rating (Note 1)
(1)	Motor cable (Note 2, 3) (dual cable type/ direct connection type for 10 m or shorter)	HK-KT series HK-MT series HK-RT103(4)WB, 153(4)WB, 203(4)WB Load-side lead With electromagnetic brake wires	Long bending life	2 m	MR-AEPB2CBL2M-A1-H	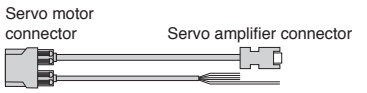 IP65
				5 m	MR-AEPB2CBL5M-A1-H	
				10 m	MR-AEPB2CBL10M-A1-H	
(2)			Standard	2 m	MR-AEPB2CBL2M-A1-L	
				5 m	MR-AEPB2CBL5M-A1-L	
				10 m	MR-AEPB2CBL10M-A1-L	
(3)		HK-KT series HK-MT series HK-RT103(4)WB, 153(4)WB, 203(4)WB Opposite to load-side lead With electromagnetic brake wires	Long bending life	2 m	MR-AEPB2CBL2M-A2-H	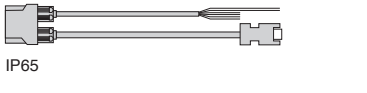 IP65
				5 m	MR-AEPB2CBL5M-A2-H	
				10 m	MR-AEPB2CBL10M-A2-H	
(4)			Standard	2 m	MR-AEPB2CBL2M-A2-L	
				5 m	MR-AEPB2CBL5M-A2-L	
				10 m	MR-AEPB2CBL10M-A2-L	
(5)		HK-KT series HK-MT series HK-RT103(4)WB, 153(4)WB, 203(4)WB Vertical lead (Note 5) With electromagnetic brake wires	Long bending life	2 m	MR-AEPB2CBL2M-A5-H	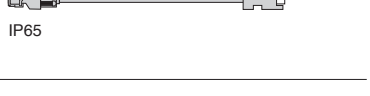 IP65
				5 m	MR-AEPB2CBL5M-A5-H	
				10 m	MR-AEPB2CBL10M-A5-H	
(6)			Standard	2 m	MR-AEPB2CBL2M-A5-L	
				5 m	MR-AEPB2CBL5M-A5-L	
				10 m	MR-AEPB2CBL10M-A5-L	
(7)		HK-KT series HK-MT series HK-RT103(4)W, 153(4)W, 203(4)W Load-side lead Without electromagnetic brake wires	Long bending life	2 m	MR-AEP2CBL2M-A1-H	 IP65
				5 m	MR-AEP2CBL5M-A1-H	
				10 m	MR-AEP2CBL10M-A1-H	
(8)			Standard	2 m	MR-AEP2CBL2M-A1-L	
				5 m	MR-AEP2CBL5M-A1-L	
				10 m	MR-AEP2CBL10M-A1-L	
(9)		HK-KT series HK-MT series HK-RT103(4)W, 153(4)W, 203(4)W Opposite to load-side lead Without electromagnetic brake wires	Long bending life	2 m	MR-AEP2CBL2M-A2-H	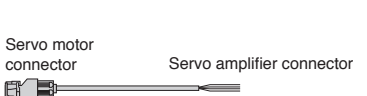 IP65
				5 m	MR-AEP2CBL5M-A2-H	
				10 m	MR-AEP2CBL10M-A2-H	
(10)			Standard	2 m	MR-AEP2CBL2M-A2-L	
				5 m	MR-AEP2CBL5M-A2-L	
				10 m	MR-AEP2CBL10M-A2-L	
(11)		HK-KT series HK-MT series HK-RT103(4)W, 153(4)W, 203(4)W Vertical lead (Note 5) Without electromagnetic brake wires	Long bending life	2 m	MR-AEP2CBL2M-A5-H	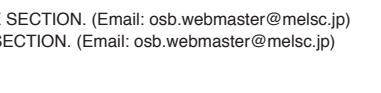 IP65
				5 m	MR-AEP2CBL5M-A5-H	
				10 m	MR-AEP2CBL10M-A5-H	
(12)			Standard	2 m	MR-AEP2CBL2M-A5-L	
				5 m	MR-AEP2CBL5M-A5-L	
				10 m	MR-AEP2CBL10M-A5-L	

Notes: 1. The IP rating indicated is for the connector's protection against ingress of dust and water when coupled to a servo motor. If the IP rating of the servo motor differs from that of these connectors, overall IP rating depends on the lowest of all.
2. For unlisted lengths of the cables, please contact Mitsubishi Electric System & Service Co., Ltd. OVERSEAS SERVICE SECTION. (Email: osb.webmaster@melsc.jp)
3. When IP67 cables are required, please contact Mitsubishi Electric System & Service Co., Ltd. OVERSEAS SERVICE SECTION. (Email: osb.webmaster@melsc.jp)
4. Long bending life cables and standard cables are for moving parts and fixed parts respectively.
5. The vertical cable should be attached to the servo motor with the locking lever facing the load side.

Cables and Connectors for Rotary Servo Motors

Refer to "Details of Option Connectors for Servo Motors" in this catalog for the detailed models.

No.	Item	Application	Bending life (Note 7)	Cable length	Model	Description/IP rating (Note 1)
(13)	Motor cable (Note 3, 5) (dual cable type/ junction type for over 10 m)	HK-KT series HK-MT series HK-RT103(4)WB, 153(4)WB, 203(4)WB Load-side lead With electromagnetic brake wires	Standard	0.3 m	MR-AEPB2J10CBL03M-A1-L	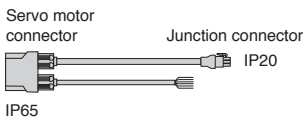
(14)		HK-KT series HK-MT series HK-RT103(4)WB, 153(4)WB, 203(4)WB Opposite to load-side lead With electromagnetic brake wires	Standard	0.3 m	MR-AEPB2J10CBL03M-A2-L	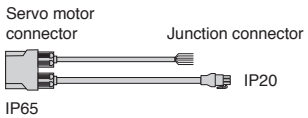
(15)		HK-KT series HK-MT series HK-RT103(4)WB, 153(4)WB, 203(4)WB Vertical lead (Note 8) With electromagnetic brake wires	Standard	0.3 m	MR-AEPB2J10CBL03M-A5-L	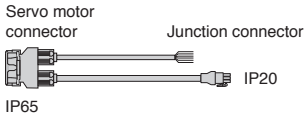
(16)		HK-KT series HK-MT series HK-RT103(4)W, 153(4)W, 203(4)W Load-side lead Without electromagnetic brake wires	Standard	0.3 m	MR-AEP2J10CBL03M-A1-L	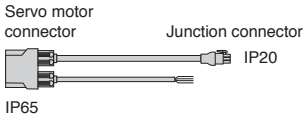
(17)		HK-KT series HK-MT series HK-RT103(4)W, 153(4)W, 203(4)W Opposite to load-side lead Without electromagnetic brake wires	Standard	0.3 m	MR-AEP2J10CBL03M-A2-L	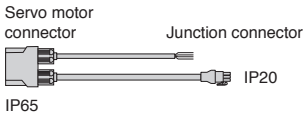
(18)		HK-KT series HK-MT series HK-RT103(4)W, 153(4)W, 203(4)W Vertical lead (Note 8) Without electromagnetic brake wires	Standard	0.3 m	MR-AEP2J10CBL03M-A5-L	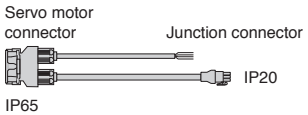
(19)	Encoder cable (Note 4, 5, 9)	HK-KT series HK-MT series HK-RT103(4)W, 153(4)W, 203(4)W	Long bending life	20 m	MR-AEKCBL20M-H	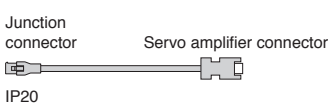
				30 m	MR-AEKCBL30M-H	
				40 m	MR-AEKCBL40M-H	
				50 m	MR-AEKCBL50M-H	
(20)			Standard	20 m	MR-AEKCBL20M-L	
				30 m	MR-AEKCBL30M-L	
(21)	Encoder connector set (Note 2, 4, 6)	HK-KT series HK-MT series HK-RT103(4)W, 153(4)W, 203(4)W Connecting a load-side encoder	-	-	MR-ECNM	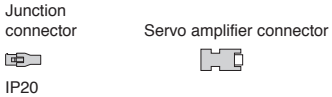 Applicable cable Wire size: AWG 26 to 22 Cable OD: 7 mm to 9 mm

Notes:
1. The IP rating indicated is for the connector's protection against ingress of dust and water when coupled to a servo motor. If the IP rating of the servo motor differs from that of these connectors, overall IP rating depends on the lowest of all.
2. The crimping tool (91529-1) manufactured by TE Connectivity is required. Contact the manufacturer directly.
3. Use this cable in combination with an option from (19) to (21).
4. When using this cable or connector set for HK-KT series/HK-MT series/HK-RT (1.0 kW to 2.0 kW) series, use it in combination with an option from (13) to (18).
5. For unlisted lengths of the cables, please contact Mitsubishi Electric System & Service Co., Ltd. OVERSEAS SERVICE SECTION. (Email: osb.webmaster@melsc.jp)
6. Use MR-EKCBL_M-H or MR-ECNM to connect to an output cable for AT343A, AT543A-SC or AT545A-SC scales manufactured by Mitutoyo Corporation.
7. Long bending life cables and standard cables are for moving parts and fixed parts respectively.
8. The vertical cable should be attached to the servo motor with the locking lever facing the load side.
9. Encoder cables are not subject to Low Voltage Directive (50 V AC to 1000 V AC and 75 V DC to 1500 V DC).

Cables and Connectors for Rotary Servo Motors

Refer to "Details of Option Connectors for Servo Motors" in this catalog for the detailed models.

No.	Item	Application	Bending life (Note 6)	Cable length	Model	Description/IP rating (Note 1)
(22)	Motor cable (Note 2, 4, 5) (dual cable type/ junction type for over 10 m)	HK-KT series HK-MT series HK-RT103(4)WB, 153(4)WB, 203(4)WB Load-side lead With electromagnetic brake wires	Standard	0.3 m	MR-AEPB2J20CBL03M-A1-L	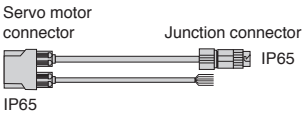
(23)		HK-KT series HK-MT series HK-RT103(4)WB, 153(4)WB, 203(4)WB Opposite to load-side lead With electromagnetic brake wires	Standard	0.3 m	MR-AEPB2J20CBL03M-A2-L	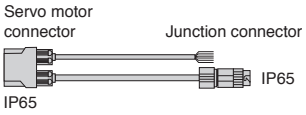
(24)		HK-KT series HK-MT series HK-RT103(4)WB, 153(4)WB, 203(4)WB Vertical lead (Note 3) With electromagnetic brake wires	Standard	0.3 m	MR-AEPB2J20CBL03M-A5-L	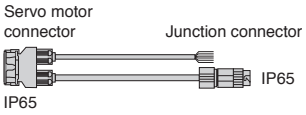
(25)		HK-KT series HK-MT series HK-RT103(4)W, 153(4)W, 203(4)W Load-side lead Without electromagnetic brake wires	Standard	0.3 m	MR-AEP2J20CBL03M-A1-L	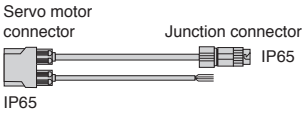
(26)		HK-KT series HK-MT series HK-RT103(4)W, 153(4)W, 203(4)W Opposite to load-side lead Without electromagnetic brake wires	Standard	0.3 m	MR-AEP2J20CBL03M-A2-L	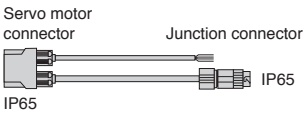
(27)		HK-KT series HK-MT series HK-RT103(4)W, 153(4)W, 203(4)W Vertical lead (Note 3) Without electromagnetic brake wires	Standard	0.3 m	MR-AEP2J20CBL03M-A5-L	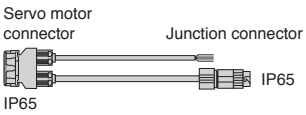

Notes: 1. The IP rating indicated is for the connector's protection against ingress of dust and water when coupled to a servo motor. If the IP rating of the servo motor differs from that of these connectors, overall IP rating depends on the lowest of all.
2. Use this cable in combination with (29), (31), or (33).
3. The vertical cable should be attached to the servo motor with the locking lever facing the load side.
4. For unlisted lengths of the cables, please contact Mitsubishi Electric System & Service Co., Ltd. OVERSEAS SERVICE SECTION. (Email: osb.webmaster@melsc.jp)
5. When IP67 cables are required, please contact Mitsubishi Electric System & Service Co., Ltd. OVERSEAS SERVICE SECTION. (Email: osb.webmaster@melsc.jp)
6. Long bending life cables and standard cables are for moving parts and fixed parts respectively.

Cables and Connectors for Rotary Servo Motors

Refer to "Details of Option Connectors for Servo Motors" in this catalog for the detailed models.

No.	Item	Application	Bending life (Note 4)	Cable length	Model	Description/IP rating (Note 1)
(28)	Encoder cable (Note 2, 3, 8)	HK-ST series HK-RT353(4)W, 503(4)W, 703(4)W HK-JT701M(4)J, 11K1M(4)J, 15K1M(4)J	Long bending life	2 m	MR-J3ENSCBL2M-H	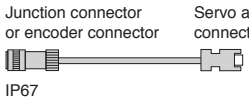
				5 m	MR-J3ENSCBL5M-H	
				10 m	MR-J3ENSCBL10M-H	
(29)		HK-KT series HK-MT series HK-ST series HK-RT series HK-JT701M(4)J, 11K1M(4)J, 15K1M(4)J	Long bending life	20 m	MR-AENSCBL20M-H	
				30 m	MR-AENSCBL30M-H	
				40 m	MR-AENSCBL40M-H	
				50 m	MR-AENSCBL50M-H	
(30)		HK-ST series HK-RT353(4)W, 503(4)W, 703(4)W HK-JT701M(4)J, 11K1M(4)J, 15K1M(4)J	Standard	2 m	MR-J3ENSCBL2M-L	
				5 m	MR-J3ENSCBL5M-L	
				10 m	MR-J3ENSCBL10M-L	
(31)		HK-KT series HK-MT series HK-ST series HK-RT series HK-JT701M(4)J, 11K1M(4)J, 15K1M(4)J	Standard	20 m	MR-AENSCBL20M-L	
				30 m	MR-AENSCBL30M-L	
(32)	Encoder cable (Note 3, 5)	HK-JT15K1J, 22K1M(4)J	Long bending life	2 m	MR-AENECBL2M-H-MTH	
				5 m	MR-AENECBL5M-H-MTH	
				10 m	MR-AENECBL10M-H-MTH	
				20 m	MR-AENECBL20M-H-MTH	
				30 m	MR-AENECBL30M-H-MTH	
				40 m	MR-AENECBL40M-H-MTH	
				50 m	MR-AENECBL50M-H-MTH	
(33)	Encoder connector set (Note 6, 7, 8) (one-touch connection type)	HK-KT series HK-MT series HK-ST series HK-RT series HK-JT701M(4)J, 11K1M(4)J, 15K1M(4)J	-	-	MR-J3SCNS	 Applicable cable Wire size: 0.5 mm² (AWG 20) or smaller Cable OD: 5.5 mm to 9.0 mm

Notes:
1. The IP rating indicated is for the connector's protection against ingress of dust and water when coupled to a servo motor. If the IP rating of the servo motor differs from that of these connectors, overall IP rating depends on the lowest of all.
2. For unlisted lengths of the cables, please contact Mitsubishi Electric System & Service Co., Ltd. OVERSEAS SERVICE SECTION. (Email: osb.webmaster@melsc.jp)
3. Encoder cables are not subject to Low Voltage Directive (50 V AC to 1000 V AC and 75 V DC to 1500 V DC).
4. Long bending life cables and standard cables are for moving parts and fixed parts respectively.
5. This encoder cable includes thermistor signal wires.
6. Cable clamps and bushings for cable OD of 5.5 mm to 7.5 mm and of 7.0 mm to 9.0 mm are included in the set.
7. The connector set contains a plug and contacts. Using contacts for other plugs may damage the connector. Use the enclosed contacts.
8. When using this cable or connector set for HK-KT series/HK-MT series/HK-RT (1.0 kW to 2.0 kW) series, use it in combination with an option from (22) to (27).

Cables and Connectors for Rotary Servo Motors

Refer to "Details of Option Connectors for Servo Motors" in this catalog for the detailed models.

No.	Item	Application	Bending life (Note 4)	Cable length	Model	Description/IP rating (Note 1)
(34)	Motor cable (Note 2, 3) (single cable type/ direct connection type for 10 m or shorter)	HK-KT series HK-MT series HK-RT103(4)WB, 153(4)WB, 203(4)WB Load-side lead With electromagnetic brake wires	Long bending life	2 m	MR-AEPB1CBL2M-A1-H	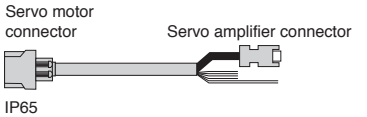
				5 m	MR-AEPB1CBL5M-A1-H	
				10 m	MR-AEPB1CBL10M-A1-H	
(35)			Standard	2 m	MR-AEPB1CBL2M-A1-L	
				5 m	MR-AEPB1CBL5M-A1-L	
				10 m	MR-AEPB1CBL10M-A1-L	
(36)		HK-KT series HK-MT series HK-RT103(4)WB, 153(4)WB, 203(4)WB Opposite to load-side lead With electromagnetic brake wires	Long bending life	2 m	MR-AEPB1CBL2M-A2-H	
				5 m	MR-AEPB1CBL5M-A2-H	
				10 m	MR-AEPB1CBL10M-A2-H	
(37)			Standard	2 m	MR-AEPB1CBL2M-A2-L	
				5 m	MR-AEPB1CBL5M-A2-L	
				10 m	MR-AEPB1CBL10M-A2-L	
(38)		HK-KT series HK-MT series HK-RT103(4)WB, 153(4)WB, 203(4)WB Vertical lead (Note 5) With electromagnetic brake wires	Long bending life	2 m	MR-AEPB1CBL2M-A5-H	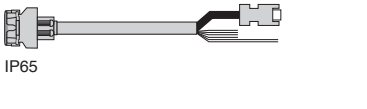
				5 m	MR-AEPB1CBL5M-A5-H	
				10 m	MR-AEPB1CBL10M-A5-H	
(39)			Standard	2 m	MR-AEPB1CBL2M-A5-L	
				5 m	MR-AEPB1CBL5M-A5-L	
				10 m	MR-AEPB1CBL10M-A5-L	
(40)		HK-KT series HK-MT series HK-RT103(4)W, 153(4)W, 203(4)W Load-side lead Without electromagnetic brake wires	Long bending life	2 m	MR-AEP1CBL2M-A1-H	
				5 m	MR-AEP1CBL5M-A1-H	
				10 m	MR-AEP1CBL10M-A1-H	
(41)			Standard	2 m	MR-AEP1CBL2M-A1-L	
				5 m	MR-AEP1CBL5M-A1-L	
				10 m	MR-AEP1CBL10M-A1-L	
(42)		HK-KT series HK-MT series HK-RT103(4)W, 153(4)W, 203(4)W Opposite to load-side lead Without electromagnetic brake wires	Long bending life	2 m	MR-AEP1CBL2M-A2-H	
				5 m	MR-AEP1CBL5M-A2-H	
				10 m	MR-AEP1CBL10M-A2-H	
(43)			Standard	2 m	MR-AEP1CBL2M-A2-L	
				5 m	MR-AEP1CBL5M-A2-L	
				10 m	MR-AEP1CBL10M-A2-L	
(44)		HK-KT series HK-MT series HK-RT103(4)W, 153(4)W, 203(4)W Vertical lead (Note 5) Without electromagnetic brake wires	Long bending life	2 m	MR-AEP1CBL2M-A5-H	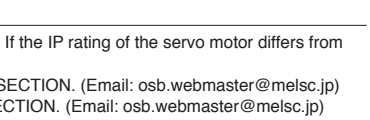
				5 m	MR-AEP1CBL5M-A5-H	
				10 m	MR-AEP1CBL10M-A5-H	
(45)			Standard	2 m	MR-AEP1CBL2M-A5-L	
				5 m	MR-AEP1CBL5M-A5-L	
				10 m	MR-AEP1CBL10M-A5-L	

Notes: 1. The IP rating indicated is for the connector's protection against ingress of dust and water when coupled to a servo motor. If the IP rating of the servo motor differs from that of these connectors, overall IP rating depends on the lowest of all.
2. For unlisted lengths of the cables, please contact Mitsubishi Electric System & Service Co., Ltd. OVERSEAS SERVICE SECTION. (Email: osb.webmaster@melsc.jp)
3. When IP67 cables are required, please contact Mitsubishi Electric System & Service Co., Ltd. OVERSEAS SERVICE SECTION. (Email: osb.webmaster@melsc.jp)
4. Long bending life cables and standard cables are for moving parts and fixed parts respectively.
5. The vertical cable should be attached to the servo motor with the locking lever facing the load side.

Cables and Connectors for Rotary Servo Motors

Refer to "Details of Option Connectors for Servo Motors" in this catalog for the detailed models.

No.	Item	Application	Bending life	Cable length	Model	Description/IP rating (Note 1)
(46)	Encoder connector set (Note 2, 3, 4) (screw type)	HK-ST series HK-RT353(4)W, 503(4)W, 703(4)W HK-JT701M(4)J, 11K1M(4)J, 15K1M(4)J (straight type)	-	-	MR-ENCNS2	Encoder connector Servo amplifier connector   IP67 Applicable cable Wire size: 0.5 mm² (AWG 20) or smaller Cable OD: 5.5 mm to 9.0 mm
(47)	Encoder connector set (Note 2, 3, 4) (one-touch connection type)	HK-ST series HK-RT353(4)W, 503(4)W, 703(4)W HK-JT701M(4)J, 11K1M(4)J, 15K1M(4)J (angle type)	-	-	MR-J3SCNSA	Encoder connector Servo amplifier connector   IP67 Applicable cable Wire size: 0.5 mm² (AWG 20) or smaller Cable OD: 5.5 mm to 9.0 mm
(48)	Encoder connector set (Note 2, 3, 4) (screw type)	HK-ST series HK-RT353(4)W, 503(4)W, 703(4)W HK-JT701M(4)J, 11K1M(4)J, 15K1M(4)J (angle type)	-	-	MR-ENCNS2A	
(49)	Encoder connector set	HK-JT15K1J, 22K1M(4)J	-	-	MR-ENECNS	Encoder connector Servo amplifier connector   IP67 Applicable cable Wire size: 0.3 mm² to 1.25 mm² (AWG 22 to 16) Cable OD: 6.8 mm to 10 mm
(50)	Power connector set (Note 4, 5, 6) (one-touch connection type)	HK-ST52(4)(W), 102(4)(W), 172(4)W, 202(4)AW, 302(4)W, 353(4)W, 503(4)W (Note 7)	-	-	MR-APWCNS4	Power connector  IP67 Applicable cable Wire size: 3.5 mm² (AWG 12) or smaller Cable OD: 11 mm to 14.1 mm
(51)	Power connector set (Note 4, 5) (one-touch connection type)	HK-ST7M2UW, 172UW, 202(4)(W), 352(4)(W), 502(4)(W), 702(4)(W) HK-RT353(4)W, 503(4)W, 703(4)W	-	-	MR-APWCNS5	Power connector  IP67 Applicable cable Wire size: 8 mm² (AWG 8) or smaller Cable OD: 12.9 mm to 16 mm
(52)	Power connector set (Note 4, 5) (one-touch connection type)	HK-JT701M(4)J, 11K1M(4)J, 15K1M(4)J	-	-	MR-APWCNS3	Power connector  IP67 Applicable cable Wire size: 22 mm² (AWG 4) or smaller Cable OD: 22 mm to 25 mm

Notes:
1. The IP rating indicated is for the connector's protection against ingress of dust and water when coupled to a servo motor. If the IP rating of the servo motor differs from that of these connectors, overall IP rating depends on the lowest of all.
2. Cable clamps and bushings for cable OD of 5.5 mm to 7.5 mm and of 7.0 mm to 9.0 mm are included in the set.
3. The connector set contains a plug and contacts. Using contacts for other plugs may damage the connector. Use the enclosed contacts.
4. For fabricating cables with these connectors, please contact Mitsubishi Electric System & Service Co., Ltd. OVERSEAS SERVICE SECTION. (Email: osb.webmaster@melsc.jp)
5. When the screw type is required, refer to "Products on the Market for Rotary Servo Motors" in this catalog.
6. Connectors for HK-ST152(4)G1/G1H/G5/G7 geared servo motors are the same as those for HK-ST172(4)W.
7. When using HK-ST503W for a machine that is required to comply with UL/CSA standards, do not use MR-APWCNS4. Use a cable (SC-PWC403C_M-SBLL or SC-PWC403C_M-SBLH) manufactured by Mitsubishi Electric System & Service Co., Ltd., and fabricate an extension cable with wires of AWG 10. For details of SC-PWC403C_M-SBLL and SC-PWC403C_M-SBLH, please contact Mitsubishi Electric System & Service Co., Ltd. OVERSEAS SERVICE SECTION. (Email: osb.webmaster@melsc.jp)

Cables and Connectors for Rotary Servo Motors

Refer to "Details of Option Connectors for Servo Motors" in this catalog for the detailed models.

No.	Item	Application	Bending life (Note 5)	Cable length	Model	Description/IP rating (Note 1)
(53)	Electromagnetic brake connector set (Note 7, 8) (one-touch connection type)	HK-ST series HK-RT353(4)WB, 503(4)WB, 703(4)WB (straight type)	-	-	MR-BKCNS1	Electromagnetic brake connector  IP67 Applicable cable Wire size: 1.25 mm² (AWG 16) or smaller Cable OD: 9.0 mm to 11.6 mm
(54)	Electromagnetic brake connector set (Note 7, 8) (screw type)		-	-	MR-BKCNS2	
(55)	Electromagnetic brake connector set (Note 7, 8) (one-touch connection type)	HK-ST series HK-RT353(4)WB, 503(4)WB, 703(4)WB (angle type)	-	-	MR-BKCNS1A	Electromagnetic brake connector  IP67 Applicable cable Wire size: 1.25 mm² (AWG 16) or smaller Cable OD: 9.0 mm to 11.6 mm
(56)	Electromagnetic brake connector set (Note 7, 8) (screw type)		-	-	MR-BKCNS2A	
(57)	Electromagnetic brake connector set	HK-JT701M(4)J, 11K1M(4)J, 15K1M(4)J	-	-	MR-BKCN	Electromagnetic brake connector  IP67 Applicable cable Wire size: 0.3 mm² to 1.25 mm² (AWG 22 to 16) Cable OD: 5.0 mm to 8.3 mm
(58)	Cooling fan power connector set (Note 8)	HK-JT15K1J, 22K1M(4)J	-	-	MR-PWCNF	Power connector  IP67 Applicable cable Wire size: 0.3 mm² to 1.25 mm² (AWG 22 to 16) Cable OD: 8.3 mm to 11.3 mm
(59)	Encoder cable (Note 2, 3, 6)	Connecting a load-side encoder	Long bending life	2 m	MR-EKCBL2M-H	Junction connector Servo amplifier connector  IP20
				5 m	MR-EKCBL5M-H	
(60)	Encoder connector set	Connecting a load-side encoder	-	-	MR-J3CN2	Servo amplifier connector 
(61)	Junction cable for fully closed loop control (Note 4)	Branching a load-side encoder	Standard	0.3 m	MR-J4FCCBL03M	Junction connector Servo amplifier connector 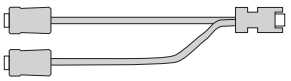
(62)	Connector set	Branching a load-side encoder	-	-	MR-J3THMCN2	Junction connector Servo amplifier connector 

Notes:
1. The IP rating indicated is for the connector's protection against ingress of dust and water when coupled to a servo motor. If the IP rating of the servo motor differs from that of these connectors, overall IP rating depends on the lowest of all.
2. Use MR-EKCBL_M-H or MR-ECNM to connect to an output cable for AT343A, AT543A-SC or AT545A-SC scales manufactured by Mitutoyo Corporation.
3. For unlisted lengths of the cables, please contact Mitsubishi Electric System & Service Co., Ltd. OVERSEAS SERVICE SECTION. (Email: osb.webmaster@melsc.jp)
4. Servo system will not operate correctly when the junction cables for fully closed loop control and for linear servo motors are used mistakenly or interchangeably. Make sure of the model before placing an order.
5. Long bending life cables and standard cables are for moving parts and fixed parts respectively.
6. Encoder cables are not subject to Low Voltage Directive (50 V AC to 1000 V AC and 75 V DC to 1500 V DC).
7. The connector set contains a plug and contacts. Using contacts for other plugs may damage the connector. Use the enclosed contacts.
8. For fabricating cables with these connectors, please contact Mitsubishi Electric System & Service Co., Ltd. OVERSEAS SERVICE SECTION. (Email: osb.webmaster@melsc.jp)

Configuration Example for Linear Servo Motors (Note 3)

G WG B WB A

MR-J5-G/B/A or MR-J5W_-G/B, and LM-H3 series/LM-K2 series/LM-U2 series

●When using a junction cable

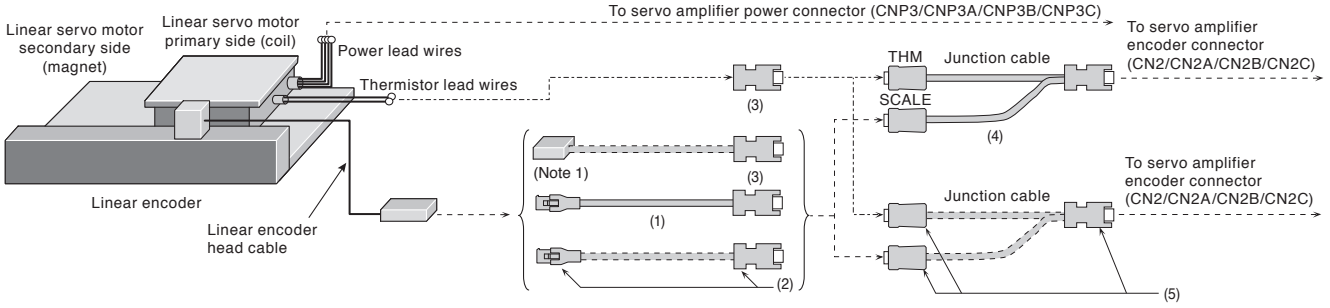

●When not using a junction cable

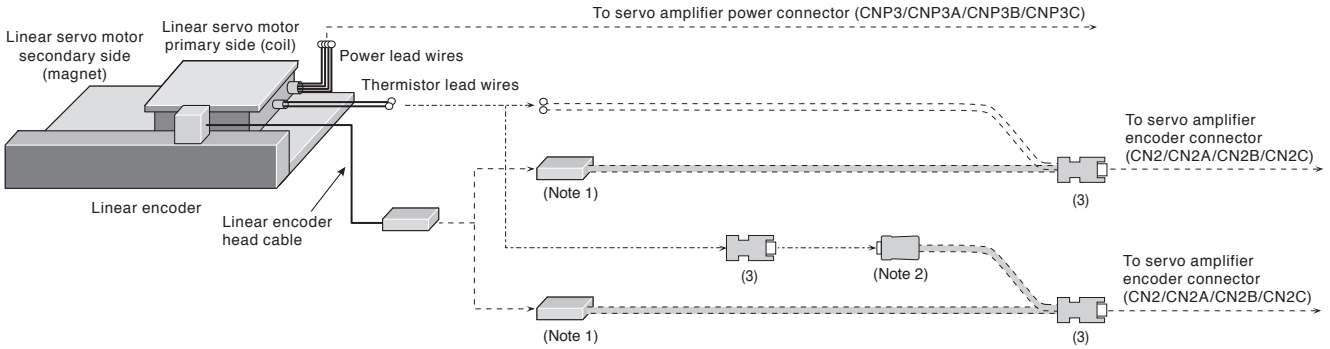

MR-J5-G/B/A and LM-F series

●When using a junction cable

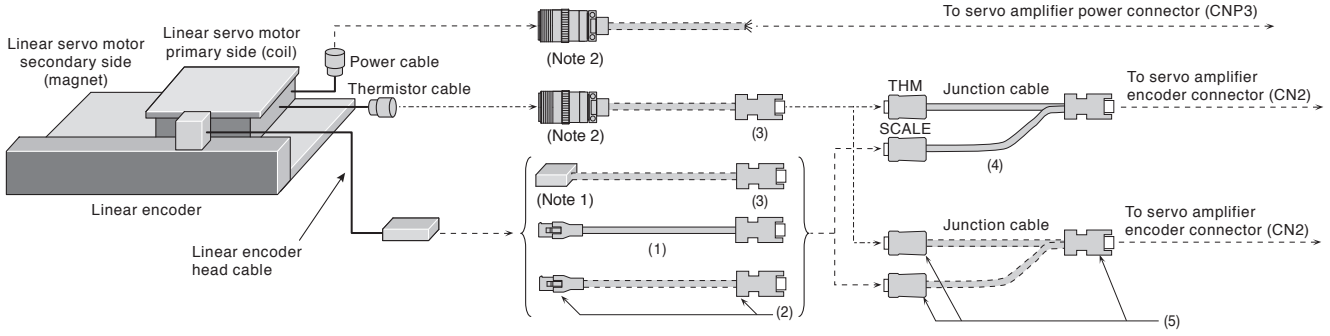

●When not using a junction cable

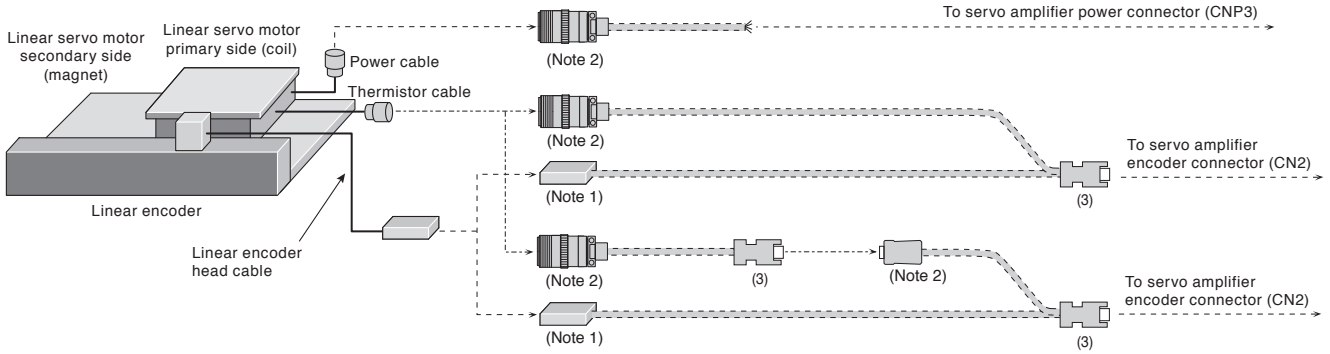

Notes: 1. Contact the relevant linear encoder manufacturers for connectors to connect with the head cables.
2. Refer to "Products on the Market for Linear Servo Motors" in this catalog for these connectors.
3. Cables drawn with dashed lines need to be fabricated by users. Refer to "Linear Servo Motor User's Manual" when fabricating the cables.

Configuration Example for Linear Servo Motors (Note 3)

G-RJ B-RJ A-RJ

MR-J5-G-RJ/B-RJ/A-RJ and LM-H3 series/LM-K2 series/LM-U2 series with a serial linear encoder

●When using a junction cable

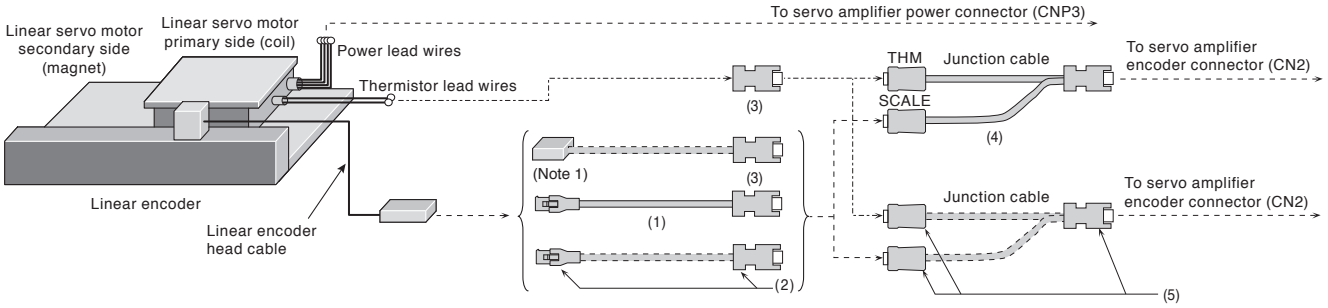

●When not using a junction cable

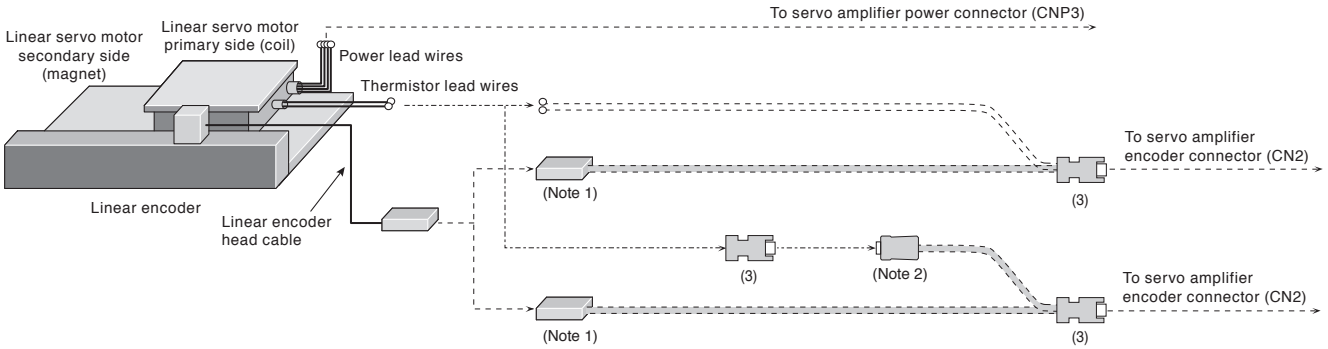

MR-J5-G-RJ/B-RJ/A-RJ and LM-F series with a serial linear encoder

●When using a junction cable

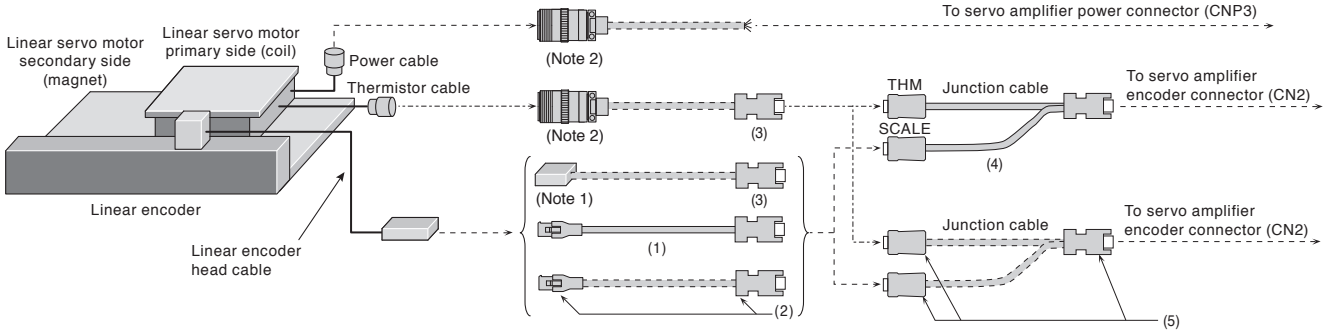

●When not using a junction cable

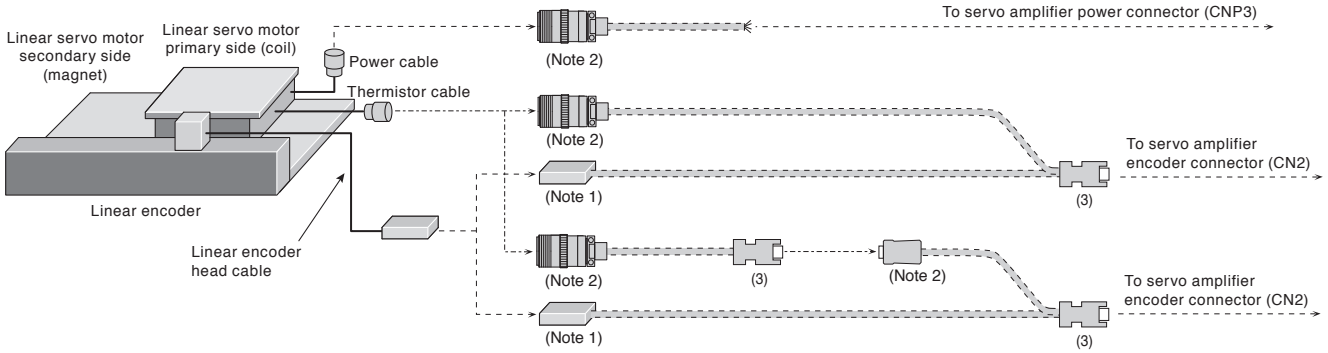

Notes: 1. Contact the relevant linear encoder manufacturers for connectors to connect with the head cables.
2. Refer to "Products on the Market for Linear Servo Motors" in this catalog for these connectors.
3. Cables drawn with dashed lines need to be fabricated by users. Refer to "Linear Servo Motor User's Manual" when fabricating the cables.

Configuration Example for Linear Servo Motors (Note 3)

G-RJ B-RJ A-RJ

MR-J5-G-RJ/B-RJ/A-RJ and LM-H3 series/LM-K2 series/LM-U2 series
with an A/B/Z-phase differential output type linear encoder

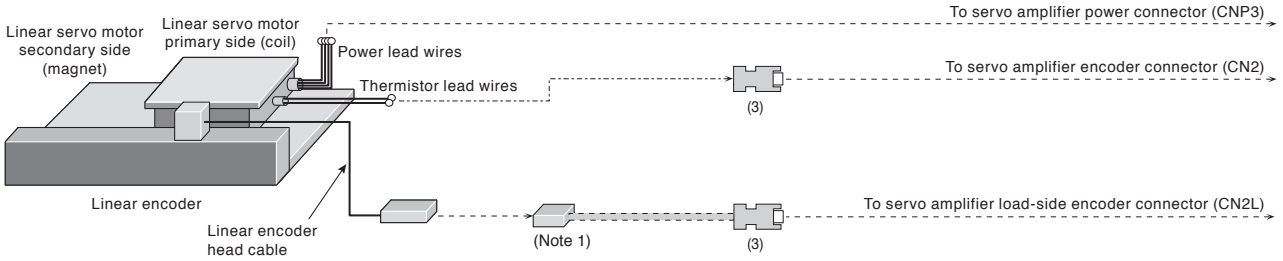

MR-J5-G-RJ/B-RJ/A-RJ and LM-F series with an A/B/Z-phase differential output type linear encoder

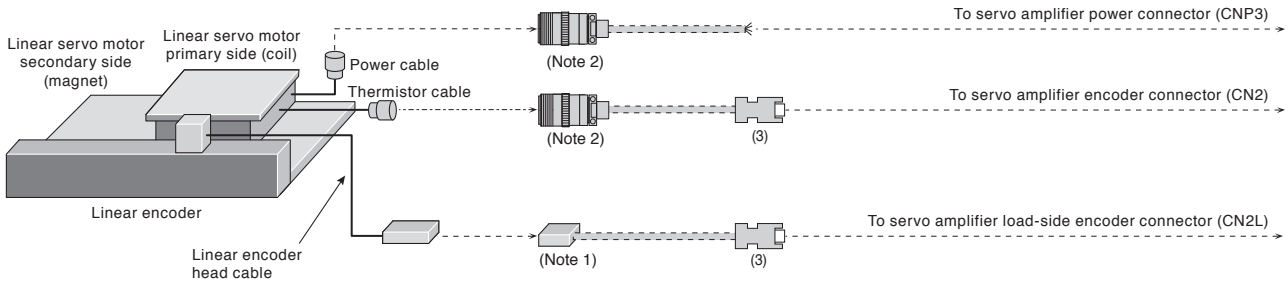

Notes: 1. Contact the relevant linear encoder manufacturers for connectors to connect with the head cables.
2. Refer to "Products on the Market for Linear Servo Motors" in this catalog for these connectors.
3. Cables drawn with dashed lines need to be fabricated by users. Refer to "Linear Servo Motor User's Manual" when fabricating the cables.

Configuration Example for Linear Servo Motors (Note 2)

G | G-RJ | WG | A | A-RJ

MR-J5-G(-RJ)/A(-RJ) or MR-J5W_-G, and LM-AJ series/LM-AU series with a serial linear encoder

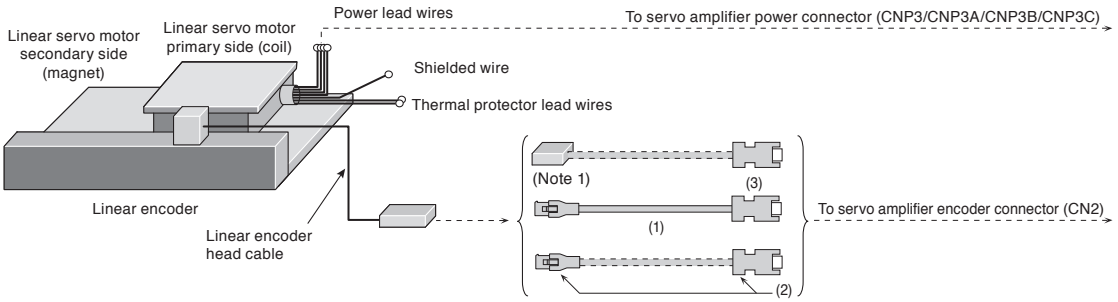

MR-J5-G-RJ/A-RJ and LM-AJ series/LM-AU series with an A/B/Z-phase differential output type linear encoder

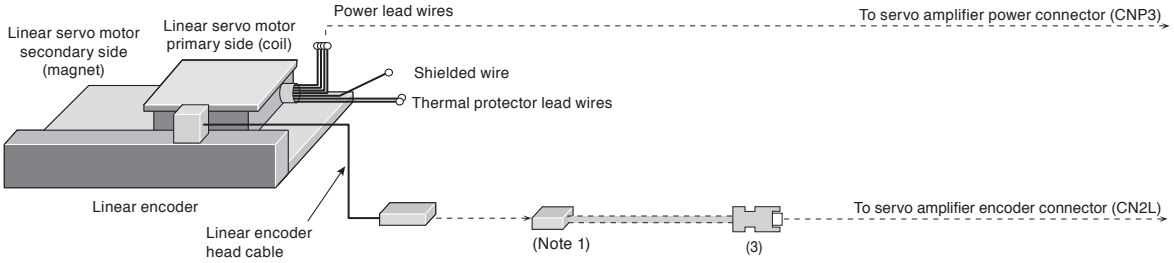

Notes: 1. Contact the relevant linear encoder manufacturers for connectors to connect with the head cables.
2. Cables drawn with dashed lines need to be fabricated by users. Refer to "Linear Servo Motor User's Manual" when fabricating the cables.

Cables and Connectors for Linear Servo Motors

Refer to "Details of Option Connectors for Servo Motors" in this catalog for the detailed models.

No.	Item	Application	Bending life (Note 6)	Cable length	Model	Description/IP rating (Note 1)
(1)	Encoder cable (Note 3, 4, 7)	Connecting a linear encoder	Long bending life	2 m	MR-EKCBL2M-H	Junction connector Servo amplifier connector  IP20
				5 m	MR-EKCBL5M-H	
(2)	Encoder connector set (Note 2, 3)	Connecting a linear encoder	-	-	MR-ECNM	Junction connector Servo amplifier connector  IP20 Applicable cable Wire size: AWG 26 to 22 Cable OD: 7 mm to 9 mm
(3)	Encoder connector set	Connecting a linear encoder or a thermistor	-	-	MR-J3CN2	Servo amplifier connector 
(4)	Junction cable for linear servo motors (Note 5)	Branching a thermistor	Standard	0.3 m	MR-J4THCBL03M	Junction connector Servo amplifier connector 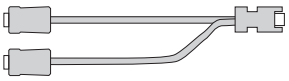
(5)	Connector set	Branching a thermistor	-	-	MR-J3THMCN2	Junction connector Servo amplifier connector 

Notes:
1. The IP rating indicated is for the connector's protection against ingress of dust and water when coupled to a servo motor. If the IP rating of the servo motor differs from that of these connectors, overall IP rating depends on the lowest of all.
2. The crimping tool (91529-1) manufactured by TE Connectivity is required. Contact the manufacturer directly.
3. Use MR-EKCBL_M-H or MR-ECNM to connect to an output cable for AT343A, AT543A-SC or AT545A-SC scales manufactured by Mitutoyo Corporation.
4. For unlisted lengths of the cables, please contact Mitsubishi Electric System & Service Co., Ltd. OVERSEAS SERVICE SECTION. (Email: osb.webmaster@melsc.jp)
5. Servo system will not operate correctly when the junction cables for fully closed loop control and for linear servo motors are used mistakenly or interchangeably. Make sure of the model before placing an order.
6. Long bending life cables and standard cables are for moving parts and fixed parts respectively.
7. Encoder cables are not subject to Low Voltage Directive (50 V AC to 1000 V AC and 75 V DC to 1500 V DC).

Configuration Example for Direct Drive Motors (Note 1)

G | G-RJ | WG | B | B-RJ | WB | A | A-RJ

TM-RG2M series/TM-RU2M series/TM-RFM series

●Incremental system

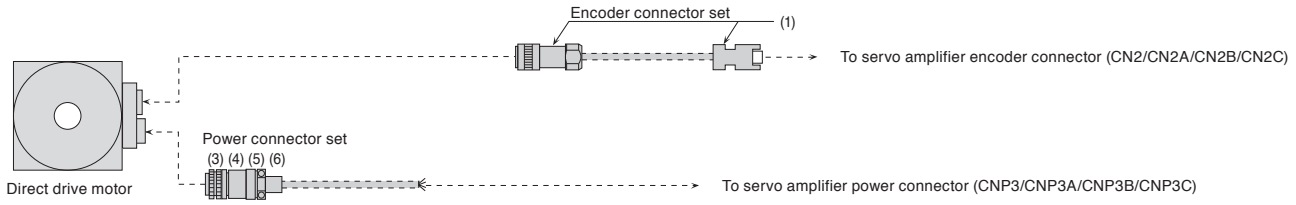

●Absolute position detection system

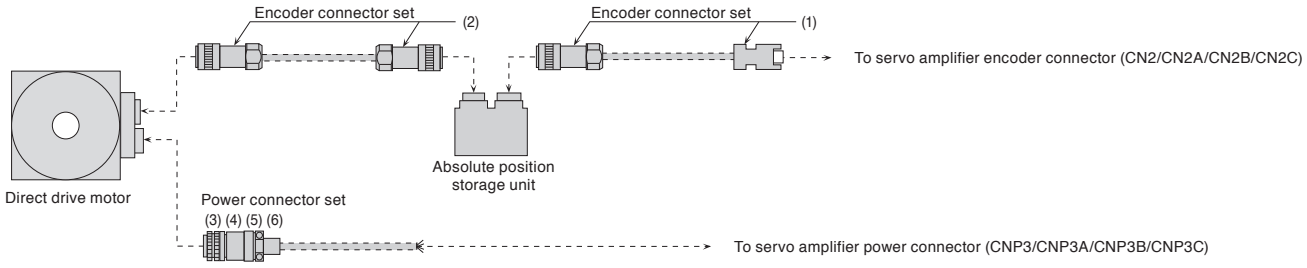

Notes: 1. Cables drawn with dashed lines need to be fabricated by users. Refer to "Direct Drive Motor User's Manual" when fabricating the cables.

Cables and Connectors for Direct Drive Motors

Refer to "Details of Option Connectors for Servo Motors" in this catalog for the detailed models.

No.	Item	Application	Bending life	Cable length	Model	Description/IP rating (Note 1)
(1)	Encoder connector set	TM-RG2M series TM-RU2M series TM-RFM series (Connecting a direct drive motor and a servo amplifier, or an absolute position storage unit and a servo amplifier)	-	-	MR-J3DDCNS	Encoder connector or absolute position storage unit connector  IP67 Servo amplifier connector  Applicable cable Wire size: 0.25 mm² to 0.5 mm² (AWG 23 to 20) Cable OD: 7.8 mm to 8.2 mm
(2)	Encoder connector set	TM-RG2M series TM-RU2M series TM-RFM series (Connecting a direct drive motor and an absolute position storage unit)	-	-	MR-J3DDSPS	Encoder connector  IP67 Absolute position storage unit connector  IP67 Applicable cable Wire size: 0.25 mm² to 0.5 mm² (AWG 23 to 20) Cable OD: 7.8 mm to 8.2 mm
(3)	Power connector set (Note 2, 3)	TM-RG2M series TM-RU2M series TM-RFM_C20 TM-RFM_E20	-	-	MR-PWCNF	Power connector  IP67 Applicable cable Wire size: 0.3 mm² to 1.25 mm² (AWG 22 to 16) Cable OD: 8.3 mm to 11.3 mm
(4)	Power connector set (Note 2)	TM-RFM_G20	-	-	MR-PWCNS4	Power connector  IP67 Applicable cable Wire size: 2 mm² to 3.5 mm² (AWG 14 to 12) Cable OD: 10.5 mm to 14.1 mm
(5)	Power connector set (Note 2)	TM-RFM040J10, TM-RFM120J10	-	-	MR-PWCNS5	Power connector  IP67 Applicable cable Wire size: 5.5 mm² to 8 mm² (AWG 10 to 8) Cable OD: 12.5 mm to 16 mm
(6)	Power connector set (Note 2)	TM-RFM240J10	-	-	MR-PWCNS3	Power connector  IP67 Applicable cable Wire size: 14 mm² to 22 mm² (AWG 6 to 4) Cable OD: 22 mm to 23.8 mm

Notes: 1. The IP rating indicated is for the connector's protection against ingress of dust and water when coupled to a servo motor/absolute position storage unit. If the IP rating of the servo motor/absolute position storage unit differs from that of these connectors, overall IP rating depends on the lowest of all.
2. For fabricating cables with these connectors, please contact Mitsubishi Electric System & Service Co., Ltd. OVERSEAS SERVICE SECTION. (Email: osb.webmaster@melsc.jp)
3. When using TM-RG2M series/TM-RU2M series/TM-RFM_C20/TM-RFM_E20 for a machine that is required to comply with UL/CSA standards, do not use MR-PWCNF. Use a cable (SC-PWCFCBL_M-L or SC-PWCFCBL_M-H) manufactured by Mitsubishi Electric System & Service Co., Ltd. For details of SC-PWCFCBL_M-L or SC-PWCFCBL_M-H, please contact Mitsubishi Electric System & Service Co., Ltd. OVERSEAS SERVICE SECTION. (Email: osb.webmaster@melsc.jp)

Details of Option Connectors for Servo Motors

Model	Servo motor connector	Servo amplifier connector
MR-AEPB2CBL_M-A1-H MR-AEPB2CBL_M-A1-L MR-AEPB2CBL_M-A2-H MR-AEPB2CBL_M-A2-L MR-AEP2CBL_M-A1-H MR-AEP2CBL_M-A1-L MR-AEP2CBL_M-A2-H MR-AEP2CBL_M-A2-L	 Connector set: MT50W-8D/2D4ES-CVLD(7.5) Contact for power supply: MT50E-1820SCFA Contact for signal: MT50D-2224SCFA (Hirose Electric Co., Ltd.)	 Connector set: 54599-1016 (Molex, LLC) or Receptacle: 36210-0100PL Shell kit: 36310-3200-008 (3M)

Model	Servo motor connector	Servo amplifier connector
MR-AEPB2CBL_M-A5-H MR-AEPB2CBL_M-A5-L MR-AEP2CBL_M-A5-H MR-AEP2CBL_M-A5-L	 Connector set: MT50W-8D/2D4ES-CVSD(7.5) Contact for power supply: MT50E-1820SCFA Contact for signal: MT50D-2224SCFA (Hirose Electric Co., Ltd.)	 Connector set: 54599-1016 (Molex, LLC) or Receptacle: 36210-0100PL Shell kit: 36310-3200-008 (3M)

Model	Servo motor connector	Junction connector
MR-AEPB2J10CBL03M-A1-L MR-AEPB2J10CBL03M-A2-L MR-AEP2J10CBL03M-A1-L MR-AEP2J10CBL03M-A2-L	 Connector set: MT50W-8D/2D4ES-CVLD(7.5) Contact for power supply: MT50E-1820SCFA Contact for signal: MT50D-2224SCFA (Hirose Electric Co., Ltd.)	 Contact: 170361-4 Housing: 1-172169-9 Cable clamp: 316454-1 (TE Connectivity)

Model	Servo motor connector	Junction connector
MR-AEPB2J10CBL03M-A5-L MR-AEP2J10CBL03M-A5-L	 Connector set: MT50W-8D/2D4ES-CVSD(7.5) Contact for power supply: MT50E-1820SCFA Contact for signal: MT50D-2224SCFA (Hirose Electric Co., Ltd.)	 Contact: 170361-4 Housing: 1-172169-9 Cable clamp: 316454-1 (TE Connectivity)

Model	Junction connector	Servo amplifier connector
MR-AEKCBL_M-H MR-AEKCBL_M-L	 Housing: 1-172161-9 Connector pin: 170359-1 (TE Connectivity) or an equivalent product Cable clamp: MTI-0002 (Toa Electric Industrial Co., Ltd.)	 Connector set: 54599-1016 (Molex, LLC) or Receptacle: 36210-0100PL Shell kit: 36310-3200-008 (3M)

Model	Junction connector	Servo amplifier connector
MR-ECNM MR-EKCBL_M-H	 Housing: 1-172161-9 Connector pin: 170359-1 (TE Connectivity) or an equivalent product Cable clamp: MTI-0002 (Toa Electric Industrial Co., Ltd.)	 Receptacle: 36210-0100PL Shell kit: 36310-3200-008 (3M) or Connector set: 54599-1019 (Molex, LLC)

Model	Servo motor connector	Junction connector
MR-AEPB2J20CBL03M-A1-L MR-AEPB2J20CBL03M-A2-L MR-AEP2J20CBL03M-A1-L MR-AEP2J20CBL03M-A2-L	 Connector set: MT50W-8D/2D4ES-CVLD(7.5) Contact for power supply: MT50E-1820SCFA Contact for signal: MT50D-2224SCFA (Hirose Electric Co., Ltd.)	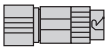 Cable receptacle: CMV1-CR10P-M2 (DDK Ltd.)

Details of Option Connectors for Servo Motors

Model	Servo motor connector	Junction connector
MR-AEPB2J20CBL03M-A5-L MR-AEP2J20CBL03M-A5-L	 Connector set: MT50W-8D/2D4ES-CVSD(7.5) Contact for power supply: MT50E-1820SCFA Contact for signal: MT50D-2224SCFA (Hirose Electric Co., Ltd.)	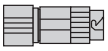 Cable receptacle: CMV1-CR10P-M2 (DDK Ltd.)

Model	Encoder connector	Servo amplifier connector
MR-J3ENSCBL_M-H (Note 2) MR-J3ENSCBL_M-L (Note 2)	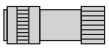 Straight plug: CMV1-SP10S-M1 Socket contact: CMV1-#22ASC-C1-100 (DDK Ltd.)	 Receptacle: 36210-0100PL Shell kit: 36310-3200-008 (3M) or Connector set: 54599-1019 (Molex, LLC)

Model	Junction connector/encoder connector	Servo amplifier connector
MR-AENSCBL_M-H (Note 2) MR-AENSCBL_M-L (Note 2)	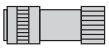 Straight plug: CMV1-SP10S-M2 Socket contact: CMV1-#22ASC-S1-100 (DDK Ltd.)	 Connector set: 54599-1016 (Molex, LLC) or Receptacle: 36210-0100PL Shell kit: 36310-3200-008 (3M)

Model	Encoder connector	Servo amplifier connector
MR-AENECBL_M-H-MTH	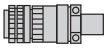 Plug: D/MS3106A20-29S(D190)(R1) Backshell: CE02-20BS-S-D(R1) (straight) Cable clamp: CE3057-12A-3-D(R1) (DDK Ltd.)	 Connector set: 54599-1016 (Molex, LLC) or Receptacle: 36210-0100PL Shell kit: 36310-3200-008 (3M)

Model	Junction connector/encoder connector	Servo amplifier connector
MR-J3SCNS (Note 1, 2, 3)	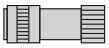 Straight plug: CMV1-SP10S-M2 Socket contact: CMV1-#22ASC-S1-100 (DDK Ltd.)	 Receptacle: 36210-0100PL Shell kit: 36310-3200-008 (3M) or Connector set: 54599-1019 (Molex, LLC)

Notes: 1. Cable clamps and bushings for cable OD of 5.5 mm to 7.5 mm and of 7.0 mm to 9.0 mm are included in the set.
2. Some cables or connector sets may contain the connectors of different shapes. However, these connectors are all usable.
3. The connector set contains a plug and contacts. Using contacts for other plugs may damage the connector. Use the enclosed contacts.

Details of Option Connectors for Servo Motors

Model	Servo motor connector	Servo amplifier connector
MR-AEPB1CBL_M-A1-H MR-AEPB1CBL_M-A1-L MR-AEPB1CBL_M-A2-H MR-AEPB1CBL_M-A2-L MR-AEP1CBL_M-A1-H MR-AEP1CBL_M-A1-L MR-AEP1CBL_M-A2-H MR-AEP1CBL_M-A2-L	 Connector set: MT50W-8D/2D4ES-CVL(11.9) Contact for power supply: MT50E-1820SCFA Contact for signal: MT50D-2224SCFA (Hirose Electric Co., Ltd.)	 Connector set: 54599-1016 (Molex, LLC) or Receptacle: 36210-0100PL Shell kit: 36310-3200-008 (3M)

Model	Servo motor connector	Servo amplifier connector
MR-AEPB1CBL_M-A5-H MR-AEPB1CBL_M-A5-L MR-AEP1CBL_M-A5-H MR-AEP1CBL_M-A5-L	 Connector set: MT50W-8D/2D4ES-CVS(11.9) Contact for power supply: MT50E-1820SCFA Contact for signal: MT50D-2224SCFA (Hirose Electric Co., Ltd.)	 Connector set: 54599-1016 (Molex, LLC) or Receptacle: 36210-0100PL Shell kit: 36310-3200-008 (3M)

Model	Encoder connector	Servo amplifier connector
MR-ENCNS2 (Note 2, 3)	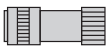 Straight plug: CMV1S-SP10S-M2 Socket contact: CMV1-#22ASC-S1-100 (DDK Ltd.)	 Receptacle: 36210-0100PL Shell kit: 36310-3200-008 (3M) or Connector set: 54599-1019 (Molex, LLC)

Model	Encoder connector	Servo amplifier connector
MR-J3SCNSA (Note 1, 2, 3)	 Angle plug: CMV1-AP10S-M2 Socket contact: CMV1-#22ASC-S1-100 (DDK Ltd.)	 Receptacle: 36210-0100PL Shell kit: 36310-3200-008 (3M) or Connector set: 54599-1019 (Molex, LLC)

Model	Encoder connector	Servo amplifier connector
MR-ENCNS2A (Note 2, 3)	 Angle plug: CMV1S-AP10S-M2 Socket contact: CMV1-#22ASC-S1-100 (DDK Ltd.)	 Receptacle: 36210-0100PL Shell kit: 36310-3200-008 (3M) or Connector set: 54599-1019 (Molex, LLC)

Model	Encoder connector	Servo amplifier connector
MR-ENECNS	 Plug: D/MS3106A20-29S(D190) Backshell: CE02-20BS-S-D (straight) Cable clamp: CE3057-12A-3-D (DDK Ltd.)	 Receptacle: 36210-0100PL Shell kit: 36310-3200-008 (3M) or Connector set: 54599-1019 (Molex, LLC)

Notes: 1. Some cables or connector sets may contain the connectors of different shapes. However, these connectors are all usable.
2. The connector set contains a plug and contacts. Using contacts for other plugs may damage the connector. Use the enclosed contacts.
3. Cable clamps and bushings for cable OD of 5.5 mm to 7.5 mm and of 7.0 mm to 9.0 mm are included in the set.

Details of Option Connectors for Servo Motors

Model	Power connector	
MR-APWCNS4	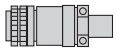	Plug: JL10-6A18-10SE-EB (straight) Cable clamp: JL04-18CK(13)-R (Japan Aviation Electronics Industry, Limited)

Model	Power connector	
MR-APWCNS5	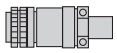	Plug: JL10-6A22-22SE-EB (straight) Cable clamp: JL04-2022CK(14)-R (Japan Aviation Electronics Industry, Limited)

Model	Power connector	
MR-APWCNS3	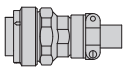	Plug: JL10-6A32-17SE-EB (straight) Cable clamp: JL04-32CK(24)-RK (Japan Aviation Electronics Industry, Limited)

Model	Electromagnetic brake connector	
MR-BKCNS1 (Note 1, 2)	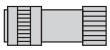	Straight plug: CMV1-SP2S-L Socket contact: CMV1-#22BSC-S2-100 (DDK Ltd.)

Model	Electromagnetic brake connector	
MR-BKCNS2 (Note 2)	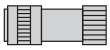	Straight plug: CMV1S-SP2S-L Socket contact: CMV1-#22BSC-S2-100 (DDK Ltd.)

Model	Electromagnetic brake connector	
MR-BKCNS1A (Note 1, 2)		Angle plug: CMV1-AP2S-L Socket contact: CMV1-#22BSC-S2-100 (DDK Ltd.)

Model	Electromagnetic brake connector	
MR-BKCNS2A (Note 2)		Angle plug: CMV1S-AP2S-L Socket contact: CMV1-#22BSC-S2-100 (DDK Ltd.)

Model	Electromagnetic brake connector	
MR-BKCN	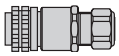	Plug: D/MS3106A10SL-4S(D190) (DDK Ltd.) Cable clamp: YSO10-5 to 8 (straight) (Daiwa Dengyo Co., Ltd.)

Model	Cooling fan power connector/power connector	
MR-PWCNF	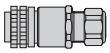	Plug: CE05-6A14S-2SD-D (straight) (DDK Ltd.) Cable clamp: YSO14-9 to 11 (Daiwa Dengyo Co., Ltd.)

Notes: 1. Some cables or connector sets may contain the connectors of different shapes. However, these connectors are all usable.
2. The connector set contains a plug and contacts. Using contacts for other plugs may damage the connector. Use the enclosed contacts.

Details of Option Connectors for Servo Motors

Model	Servo amplifier connector		
MR-J3CN2	 Receptacle: 36210-0100PL Shell kit: 36310-3200-008 (3M)	or	Connector set: 54599-1019 (Molex, LLC)

Model	Junction connector	Servo amplifier connector
MR-J4FCCBL03M MR-J4THCBL03M MR-J3THMCN2	 Plug: 36110-3000FD Shell kit: 36310-F200-008 (3M)	 Receptacle: 36210-0100PL Shell kit: 36310-3200-008 (3M)

Model	Encoder connector/absolute position storage unit connector	Servo amplifier connector
MR-J3DDCNS	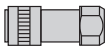 Plug: RM15WTPZK-12S Cord clamp: JR13WCCA-8(72) (Hirose Electric Co., Ltd.)	 Receptacle: 36210-0100PL Shell kit: 36310-3200-008 (3M) or Connector set: 54599-1019 (Molex, LLC)

Model	Encoder connector	Absolute position storage unit connector
MR-J3DDSPS	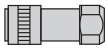 Plug: RM15WTPZK-12S Cord clamp: JR13WCCA-8(72) (Hirose Electric Co., Ltd.)	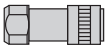 Plug: RM15WTPZ-12P(72) Cord clamp: JR13WCCA-8(72) (Hirose Electric Co., Ltd.)

Model	Power connector	
MR-PWCNS4	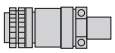	Plug: CE05-6A18-10SD-D-BSS (straight) Cable clamp: CE3057-10A-1-D (DDK Ltd.)

Model	Power connector	
MR-PWCNS5	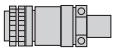	Plug: CE05-6A22-22SD-D-BSS (straight) Cable clamp: CE3057-12A-1-D (DDK Ltd.)

Model	Power connector	
MR-PWCNS3	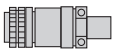	Plug: CE05-6A32-17SD-D-BSS (straight) Cable clamp: CE3057-20A-1-D (DDK Ltd.)

Products on the Market for Rotary Servo Motors

Contact the relevant manufacturers directly.
When fabricating a cable with the following connectors, refer to the relevant manufacturers' instruction manuals for wiring and assembling procedures.

Encoder connector (servo amplifier side)



Application	Connector (3M)
Servo amplifier CN2 connector	Receptacle: 36210-0100PL Shell kit: 36310-3200-008
	Connector (Molex, LLC)
	54599-1019 (gray)
	54599-1016 (black)

Connector for HK-KT series/HK-MT series/HK-RT (1.0 kW to 2.0 kW) series (for dual cable type)

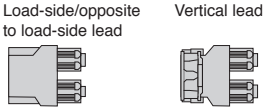

Applicable servo motor	IP rating (Note 1)	Connector set (Hirose Electric Co., Ltd.)		Contact (Hirose Electric Co., Ltd.)	Applicable cable example
		Cable direction	Model		
HK-KT series HK-MT series HK-RT103(4)W, 153(4)W, 203(4)W	IP67	In the direction of the load side/In the opposite direction of the load side	MT50W-8D/ 2D4ES-CVLD(7.5)	For power supply: MT50E-1820SCFA For signal: MT50D-2224SCFA	Refer to "Rotary Servo Motor User's Manual (For MR-J5)" for the applicable cables.
		Vertical (Note 3)	MT50W-8D/ 2D4ES-CVSD(7.5)		

Connector for HK-KT series/HK-MT series/HK-RT (1.0 kW to 2.0 kW) series (for single cable type)

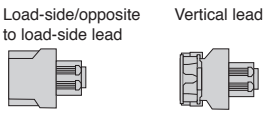

Applicable servo motor	IP rating (Note 1)	Connector set (Hirose Electric Co., Ltd.)		Contact (Hirose Electric Co., Ltd.)	Applicable cable example
		Cable direction	Model		
HK-KT series HK-MT series HK-RT103(4)W, 153(4)W, 203(4)W	IP67	In the direction of the load side/In the opposite direction of the load side	MT50W-8D/ 2D4ES-CVL(11.9)	For power supply: MT50E-1820SCFA For signal: MT50D-2224SCFA	Refer to "Rotary Servo Motor User's Manual (For MR-J5)" for the applicable cables.
		Vertical (Note 3)	MT50W-8D/ 2D4ES-CVS(11.9)		

Encoder connector for HK-ST series/HK-RT (3.5 kW to 7.0 kW) series/ HK-JT 1500 r/min (7 kW to 15 kW) series

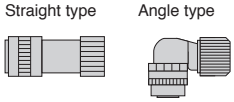

Applicable servo motor	IP rating (Note 1)	Connector (DDK Ltd.)				Applicable cable example
		Type	Type of connection	Plug	Socket contact	Cable OD [mm]
HK-ST series HK-RT353(4)W, 503(4)W, 703(4)W HK-JT701M(4)J, 11K1M(4)J, 15K1M(4)J	IP67	Straight	One-touch connection type	CMV1-SP10S-M1	Select a solder or press bonding type. (Refer to the table below.)	5.5 to 7.5
				CMV1-SP10S-M2		7.0 to 9.0
			Screw type	CMV1S-SP10S-M1		5.5 to 7.5
				CMV1S-SP10S-M2		7.0 to 9.0
		Angle	One-touch connection type	CMV1-AP10S-M1		5.5 to 7.5
				CMV1-AP10S-M2		7.0 to 9.0
			Screw type	CMV1S-AP10S-M1		5.5 to 7.5
				CMV1S-AP10S-M2		7.0 to 9.0

Contact	Socket contact (DDK Ltd.)	Wire size (Note 2)
Solder type	CMV1-#22ASC-S1-100	0.5 mm^2 (AWG 20) or smaller
Press bonding type	CMV1-#22ASC-C1-100	0.2 mm^2 to 0.5 mm^2 (AWG 24 to 20) Crimping tool (357J-53162T) is required.
	CMV1-#22ASC-C2-100	0.08 mm^2 to 0.2 mm^2 (AWG 28 to 24) Crimping tool (357J-53163T) is required.

Notes: 1. The IP rating indicated is for the connector's protection against ingress of dust and water when coupled to a servo motor. If the IP rating of the servo motor differs from that of these connectors, overall IP rating depends on the lowest of all.
2. The wire size shows wiring specifications of the connector.
3. The vertical cable should be attached to the servo motor with the locking lever facing the load side.

Products on the Market for Rotary Servo Motors

Contact the relevant manufacturers directly.
When fabricating a cable with the following connectors, refer to the relevant manufacturers' instruction manuals for wiring and assembling procedures.

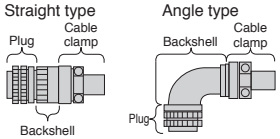

Encoder connector for HK-JT 1000 r/min (15 kW) series/HK-JT 1500 r/min (22 kW) series

Applicable servo motor	IP rating (Note 1)	Plug (DDK Ltd.)	Backshell (DDK Ltd.)		Cable clamp (DDK Ltd.)	Applicable cable example	
		Model	Type	Model	Model	Wire size (Note 2)	Cable OD [mm]
HK-JT15K1J, 22K1M(4)J	IP67	D/MS3106A20-29S (D190)(R1)	Straight	CE02-20BS-S-D(R1)	CE3057-12A-3-D(R1)	0.3 mm^2 to 1.25 mm^2 (AWG 22 to 16)	6.8 to 10
			Angle	CE-20BA-S-D(R1)			

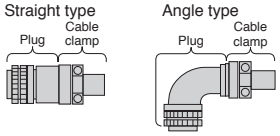

Applicable servo motor	IP rating	Plug (with backshell) (DDK Ltd.)		Cable clamp (DDK Ltd.)	Applicable cable example	
		Type	Model	Model	Wire size (Note 2)	Cable OD [mm]
HK-JT15K1J, 22K1M(4)J	-	Straight	D/MS3106B20-29S	CE3057-12A-3-D(R1)	0.3 mm^2 to 1.25 mm^2 (AWG 22 to 16)	6.8 to 10
		Angle	D/MS3108B20-29S			

Notes: 1. The IP rating indicated is for the connector's protection against ingress of dust and water when coupled to a servo motor. If the IP rating of the servo motor differs from that of these connectors, overall IP rating depends on the lowest of all.
2. The wire size shows wiring specifications of the connector. Refer to "Selection Example in HIV Wires for Servo Motors" in this catalog for examples of wire size selection.

Products on the Market for Rotary Servo Motors

Contact the relevant manufacturers directly.
When fabricating a cable with the following connectors, refer to the relevant manufacturers' instruction manuals for wiring and assembling procedures.

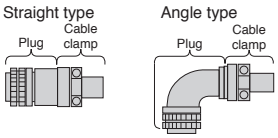

Power connector for HK-ST series/HK-RT (3.5 kW to 7.0 kW) series (Note 3)

Applicable servo motor	IP rating (Note 1)	Plug (Japan Aviation Electronics Industry, Limited)			Cable clamp (Japan Aviation Electronics Industry, Limited)	Applicable cable example	
		Type	Type of connection	Model		Wire size (Note 2)	Cable OD [mm]
HK-ST52(4)(W), 102(4)(W), 172(4)W, 202(4)AW, 302(4)W, 353(4)W, 503(4)W	IP67	Straight	One-touch connection type	JL10-6A18-10SE-EB	JL04-18CK(10)-R	3.5 mm² (AWG 12) or smaller	8 to 11
					JL04-18CK(13)-R		11 to 14.1
			Screw type	JL04V-6A18-10SE-EB-R	JL04-18CK(10)-R		8 to 11
					JL04-18CK(13)-R		11 to 14.1
		Angle	One-touch connection type	JL10-8A18-10SE-EB	JL04-18CK(10)-R		8 to 11
					JL04-18CK(13)-R		11 to 14.1
			Screw type	JL04V-8A18-10SE-EBH-R	JL04-18CK(10)-R		8 to 11
					JL04-18CK(13)-R		11 to 14.1
HK-ST7M2UW, 172UW, 202(4)(W), 352(4)(W), 502(4)(W), 702(4)(W) HK-RT353(4)W, 503(4)W, 703(4)W		Straight	One-touch connection type	JL10-6A22-22SE-EB	JL04-2022CK(12)-R	8 mm² (AWG 8) or smaller	9.5 to 13
					JL04-2022CK(14)-R		12.9 to 16
			Screw type	JL04V-6A22-22SE-EB-R	JL04-2022CK(12)-R		9.5 to 13
					JL04-2022CK(14)-R		12.9 to 16
		Angle	One-touch connection type	JL10-8A22-22SE-EB	JL04-2022CK(12)-R		9.5 to 13
					JL04-2022CK(14)-R		12.9 to 16
			Screw type	JL04V-8A22-22SE-EBH-R	JL04-2022CK(12)-R		9.5 to 13
					JL04-2022CK(14)-R		12.9 to 16

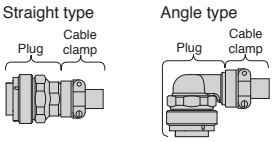

Power connector for HK-JT 1500 r/min (7 kW to 15 kW) series

Applicable servo motor	IP rating (Note 1)	Plug (Japan Aviation Electronics Industry, Limited)				Cable clamp (Japan Aviation Electronics Industry, Limited)	Applicable cable example	
		Type	Type of connection	Plug model	Endbell model	Model	Wire size (Note 2)	Cable OD [mm]
HK-JT701M(4)J, 11K1M(4)J, 15K1M(4)J	IP67	Straight	One-touch connection type	JL10-6A32-17SE-EB (Note 4)	-	JL04-32CK(24)_ (Note 5)	22 mm² (AWG 4) or smaller	22 to 25
				JL10-6A32-17SE	JL10-6A32EB1	JL10-36CK(30)		27.5 to 30
						JL10-36CK(32)		30 to 32.5
			Screw type	JL04V-6A32-17SE-EB-RK (Note 4)	-	JL04-32CK(24)_ (Note 5)		22 to 25
		Angle	One-touch connection type	JL10-8A32-17SE-EB (Note 4)				

Notes: 1. The IP rating indicated is for the connector's protection against ingress of dust and water when coupled to a servo motor. If the IP rating of the servo motor differs from that of these connectors, overall IP rating depends on the lowest of all.
2. The wire size shows wiring specifications of the connector. Refer to "Selection Example in HIV Wires for Servo Motors" in this catalog for examples of wire size selection.
3. Connectors for HK-ST152(4)G1/G1H/G5/G7 geared servo motors are the same as those for HK-ST172(4)W.
4. Endbell is installed.
5. "_" in the model name indicates the following symbols depending on the materials of the rubber bushing for the cable clamps:
-RK: nitrile rubber
-EPDM-R: terpolymer rubber of ethylene, propylene, and dimethylene

Products on the Market for Rotary Servo Motors

Contact the relevant manufacturers directly.
When fabricating a cable with the following connectors, refer to the relevant manufacturers' instruction manuals for wiring and assembling procedures.

Electromagnetic brake connector for HK-ST series/HK-RT (3.5 kW to 7.0 kW) series

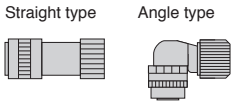

Applicable servo motor	IP rating (Note 1)	Connector (DDK Ltd.)				Applicable cable example
		Type	Type of connection	Plug	Socket contact	Cable OD [mm]
HK-ST series HK-RT353(4)WB, 503(4)WB, 703(4)WB	IP67	Straight	One-touch connection type	CMV1-SP2S-S	Select a solder or press bonding type. (Refer to the table below.)	4.0 to 6.0
				CMV1-SP2S-M1		5.5 to 7.5
				CMV1-SP2S-M2		7.0 to 9.0
				CMV1-SP2S-L		9.0 to 11.6
			Screw type	CMV1S-SP2S-S		4.0 to 6.0
				CMV1S-SP2S-M1		5.5 to 7.5
				CMV1S-SP2S-M2		7.0 to 9.0
				CMV1S-SP2S-L		9.0 to 11.6
		Angle	One-touch connection type	CMV1-AP2S-S		4.0 to 6.0
				CMV1-AP2S-M1		5.5 to 7.5
				CMV1-AP2S-M2		7.0 to 9.0
				CMV1-AP2S-L		9.0 to 11.6
			Screw type	CMV1S-AP2S-S		4.0 to 6.0
				CMV1S-AP2S-M1		5.5 to 7.5
				CMV1S-AP2S-M2		7.0 to 9.0
				CMV1S-AP2S-L		9.0 to 11.6

Contact	Socket contact (DDK Ltd.)	Wire size (Note 2)
Solder type	CMV1-#22BSC-S2-100	1.25 mm^2 (AWG 16) or smaller
Press bonding type	CMV1-#22BSC-C3-100	0.5 mm^2 to 1.25 mm^2 (AWG 20 to 16) Crimping tool (357J-53164T) is required.

Electromagnetic brake connector for HK-JT 1500 r/min (7 kW to 15 kW) series

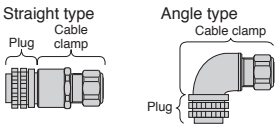

Applicable servo motor	IP rating (Note 1)	Plug (DDK Ltd.)	Cable clamp			Applicable cable example	
		Model	Type	Model	Manufacturer	Wire size (Note 2)	Cable OD [mm]
HK-JT701M(4)J, 11K1M(4)J, 15K1M(4)J	IP67	D/MS3106A10SL-4S(D190)	Straight	C2KD0810	Sankei Manufacturing Co., Ltd. (Note 3)	0.3 mm^2 to 1.25 mm^2 (AWG 22 to 16)	4 to 8
				C2KD1210			8 to 12
				YSO10-5 to 8	Daiwa Dengyo Co., Ltd.		5 to 8.3
			Angle	C29KD0810	Sankei Manufacturing Co., Ltd. (Note 3)		4 to 8
				C29KD1210			8 to 12
				YLO10-5 to 8	Daiwa Dengyo Co., Ltd.		5 to 8.3

Notes: 1. The IP rating indicated is for the connector's protection against ingress of dust and water when coupled to a servo motor. If the IP rating of the servo motor differs from that of these connectors, overall IP rating depends on the lowest of all.
2. The wire size shows wiring specifications of the connector. Refer to "Selection Example in HIV Wires for Servo Motors" in this catalog for examples of wire size selection.
3. Contact: Sankei Manufacturing Co., Ltd. and Mikuni Electric Co., Ltd.

Products on the Market for Rotary Servo Motors

Contact the relevant manufacturers directly.
When fabricating a cable with the following connectors, refer to the relevant manufacturers' instruction manuals for wiring and assembling procedures.

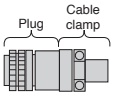

Electromagnetic brake connector for HK-JT 1500 r/min (7 kW to 15 kW) series

Applicable servo motor	IP rating	Plug (with backshell) (DDK Ltd.)		Cable clamp (DDK Ltd.)	Applicable cable example	
		Type	Model	Model	Wire size (Note 1)	Cable OD [mm]
HK-JT701M(4)J, 11K1M(4)J, 15K1M(4)J	-	Straight	D/MS3106A10SL-4S	D/MS3057-4A	0.3 mm^2 to 1.25 mm^2 (AWG 22 to 16)	5.6 or smaller (bushing ID)

Notes: 1. The wire size shows wiring specifications of the connector. Refer to "Selection Example in HIV Wires for Servo Motors" in this catalog for examples of wire size selection.

Products on the Market for Linear Servo Motors

Contact the relevant manufacturers directly.
When fabricating a cable with the following connectors, refer to the relevant manufacturers' instruction manuals for wiring and assembling procedures.

Thermistor junction connector for LM-H3 series/LM-K2 series/LM-U2 series/LM-F series



Applicable servo motor	IP rating (Note 1)	Connector (3M)		Applicable cable example
		Plug	Shell kit	
LM-H3 series LM-K2 series LM-U2 series LM-F series	-	36110-3000FD	36310-F200-008	Wire size: 0.3 mm² (AWG 22) or smaller Cable OD: 7 mm to 9 mm

Thermistor connector for LM-F series

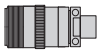

Applicable servo motor	IP rating (Note 1)	Cable receptacle (DDK Ltd.)	Cable clamp (DDK Ltd.)	Applicable cable example
LM-F series	-	D/MS3101A14S-9S	D/MS3057A-6A	Wire size: 0.3 mm² to 1.25 mm² (AWG 22 to 16) Cable OD: 7.9 mm or smaller

Power connector for LM-F series

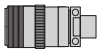

Applicable servo motor	IP rating (Note 1)	Cable receptacle (DDK Ltd.)	Cable clamp (DDK Ltd.)	Applicable cable example	
				Wire size (Note 2)	Cable OD [mm]
LM-FP2B, 2D, 2F	-	D/MS3101A18-10S	D/MS3057-10A	2 mm² to 3.5 mm² (AWG 14 to 12)	14.3 or smaller (bushing ID)
LM-FP4B, 4D	-	D/MS3101A24-22S	D/MS3057-16A	5.5 mm² to 8 mm² (AWG 10 to 8)	19.1 or smaller (bushing ID)

Notes: 1. The IP rating indicated is for the connector's protection against ingress of dust and water when coupled to a servo motor. If the IP rating of the servo motor differs from that of these connectors, overall IP rating depends on the lowest of all.
2. The wire size shows wiring specifications of the connector. Refer to "Selection Example in HIV Wires for Servo Motors" in this catalog for examples of wire size selection.

Products on the Market for Direct Drive Motors

Contact the relevant manufacturers directly.
When fabricating a cable with the following connectors, refer to the relevant manufacturers' instruction manuals for wiring and assembling procedures.

Encoder connector for TM-RG2M series/TM-RU2M series/TM-RFM series and absolute position storage unit connector (servo amplifier side)

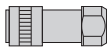

Applicable servo motor	Application	IP rating (Note 1)	Plug (Hirose Electric Co., Ltd.)			Applicable cable example
			Type	Plug	Cord clamp	
TM-RG2M series TM-RU2M series TM-RFM series	For an encoder or absolute position storage unit (servo amplifier side)	IP67	Straight	RM15WTPZK-12S	JR13WCCA-8(72)	Wire size: 0.5 mm^2 (AWG 20) or smaller Cable OD: 7.8 mm to 8.2 mm Wire example: Vinyl jacket cable 20276 VSVPAWG#23 × 6P KB-0492 Bando Densen Co., Ltd. (Note 2)

Encoder connector for TM-RG2M series/TM-RU2M series/TM-RFM series and absolute position storage unit connector (encoder side)

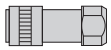

Applicable servo motor	Application	IP rating (Note 1)	Plug (Hirose Electric Co., Ltd.)			Applicable cable example
			Type	Plug	Cord clamp	
TM-RG2M series TM-RU2M series TM-RFM series	For an absolute position storage unit (encoder side)	IP67	Straight	RM15WTPZ-12P(72)	JR13WCCA-8(72)	Wire size: 0.5 mm^2 (AWG 20) or smaller Cable OD: 7.8 mm to 8.2 mm Wire example: Vinyl jacket cable 20276 VSVPAWG#23 × 6P KB-0492 Bando Densen Co., Ltd. (Note 2)

Notes: 1. The IP rating indicated is for the connector's protection against ingress of dust and water when coupled to a servo motor/absolute position storage unit. If the IP rating of the servo motor/absolute position storage unit differs from that of these connectors, overall IP rating depends on the lowest of all.
2. Contact Toa Electric Industrial Co., Ltd.

Products on the Market for Direct Drive Motors

Contact the relevant manufacturers directly.
When fabricating a cable with the following connectors, refer to the relevant manufacturers' instruction manuals for wiring and assembling procedures.

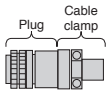

Power connector for TM-RFM series

Applicable servo motor	IP rating (Note 1)	Plug (with backshell) (DDK Ltd.)		Cable clamp (DDK Ltd.)	Applicable cable example	
		Type	Model	Model	Wire size (Note 2)	Cable OD [mm]
TM-RFM012G20, 048G20, 072G20	IP67	Straight	CE05-6A18-10SD-D-BSS	CE3057-10A-2-D	2 mm² to 3.5 mm² (AWG 14 to 12)	8.5 to 11
				CE3057-10A-1-D		10.5 to 14.1
	-		D/MS3106B18-10S	D/MS3057-10A	2 mm² to 3.5 mm² (AWG 14 to 12)	14.3 or smaller (bushing ID)
TM-RFM040J10, 120J10	IP67		CE05-6A22-22SD-D-BSS	CE3057-12A-2-D	5.5 mm² to 8 mm² (AWG 10 to 8)	9.5 to 13
				CE3057-12A-1-D		12.5 to 16
	-		D/MS3106B22-22S	D/MS3057-12A	5.5 mm² to 8 mm² (AWG 10 to 8)	15.9 or smaller (bushing ID)
TM-RFM240J10	IP67		CE05-6A32-17SD-D-BSS	CE3057-20A-1-D	14 mm² to 22 mm² (AWG 6 to 4)	22 to 23.8
	-		D/MS3106B32-17S	D/MS3057-20A	14 mm² to 22 mm² (AWG 6 to 4)	23.8 or smaller (bushing ID)

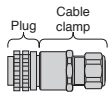

Power connector for TM-RG2M series/TM-RU2M series/TM-RFM series

Applicable servo motor	IP rating (Note 1)	Plug (DDK Ltd.)	Cable clamp			Applicable cable example	
			Type	Model	Manufacturer	Wire size (Note 2)	Cable OD [mm]
TM-RG2M series TM-RU2M series TM-RFM002C20, 004C20, 006C20, 006E20, 012E20, 018E20	IP67	CE05-6A14S-2SD-D	Straight	C2KD0814	Sankei Manufacturing Co., Ltd. (Note 3)	0.3 mm² to 1.25 mm² (AWG 22 to 16)	4 to 8
				C2KD1214			8 to 12
				YSO14-5 to 8	Daiwa Dengyo Co., Ltd.		5 to 8.3
				YSO14-9 to 11			8.3 to 11.3
	-	D/MS3106B14S-2S	Straight	D/MS3057-6A	DDK Ltd.	0.3 mm² to 1.25 mm² (AWG 22 to 16)	7.9 or smaller (bushing ID)

Notes: 1. The IP rating indicated is for the connector's protection against ingress of dust and water when coupled to a servo motor. If the IP rating of the servo motor differs from that of these connectors, overall IP rating depends on the lowest of all.
2. The wire size shows wiring specifications of the connector. Refer to "Selection Example in HIV Wires for Servo Motors" in this catalog for examples of wire size selection.
3. Contact: Sankei Manufacturing Co., Ltd. and Mikuni Electric Co., Ltd.

Configuration Example for MR-J5-_G-HS

G-HS

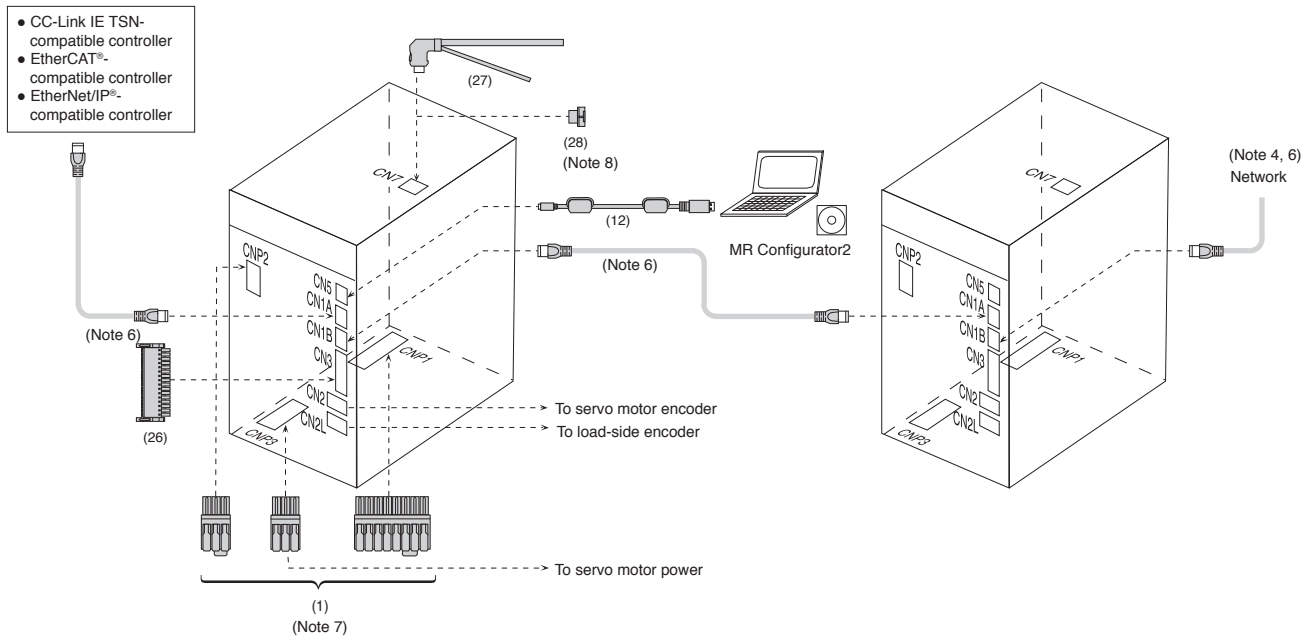

Configuration Example for MR-J5-_G(-RJ)

G G-RJ

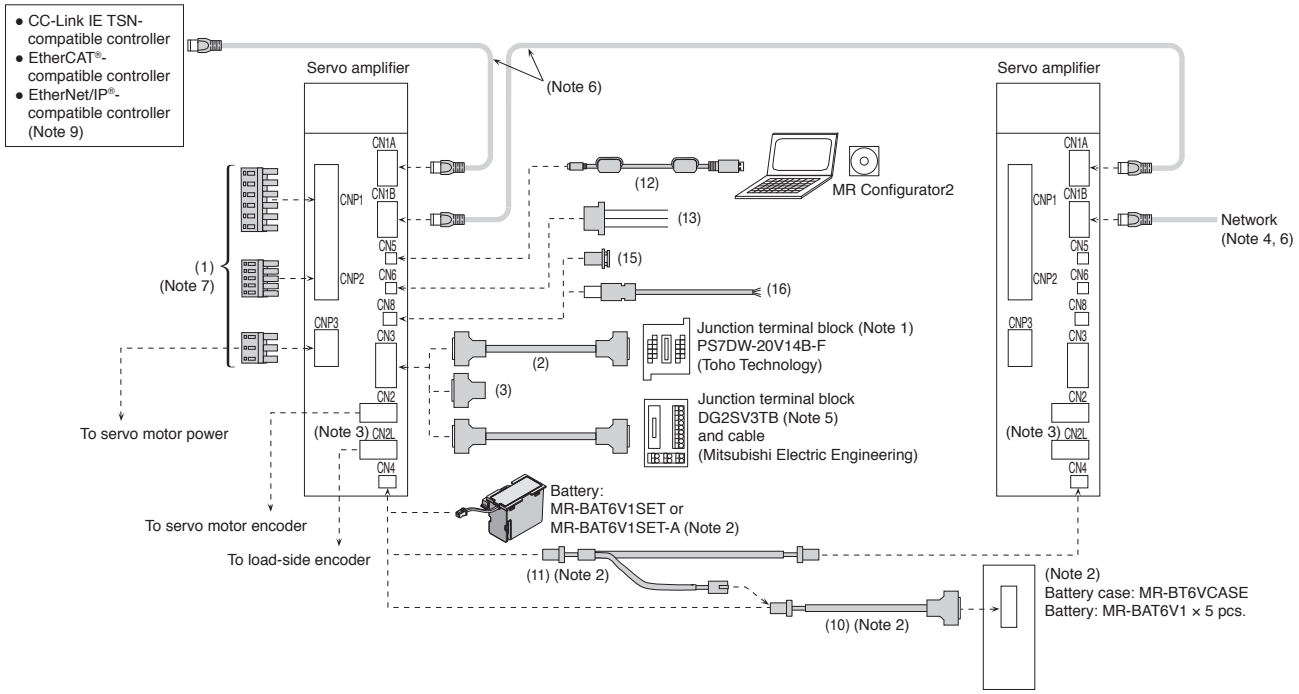

Notes:
1. Refer to "Junction Terminal Block" in this catalog.
2. When configuring an absolute position detection system with a direct drive motor, use a battery (MR-BAT6V1SET or MR-BAT6V1SET-A), or a battery case (MR-BT6VCASE) and batteries (MR-BAT6V1 × 5 pieces). When using the battery case, use the indicated cables. Refer to "Battery" or "Battery Case and Battery" in this catalog for details of the battery and connections of the battery case.
3. CN2L connector is available for MR-J5-G-RJ servo amplifiers.
4. When branching off CC-Link IE TSN (synchronous communication function) with a switching hub, use a switching hub (class B) recommended by CC-Link Partner Association. When a switching hub (class A) is used, there are restrictions on the topologies to be used. Refer to the controller manual for details.
5. Refer to p. 7-52 in this catalog for details.
6. Refer to "Ethernet Cable Specifications" in this catalog for specifications of the Ethernet cable.
7. The shape and position of the power connector are different from those of the indicated connector for some servo amplifier capacities. Refer to the dimensions for details.
8. When not using CN7 connector, attach a cap.
9. EtherNet/IP® is supported by MR-J5-G-RJN1.

Configuration Example for MR-J5W_-_G

WG

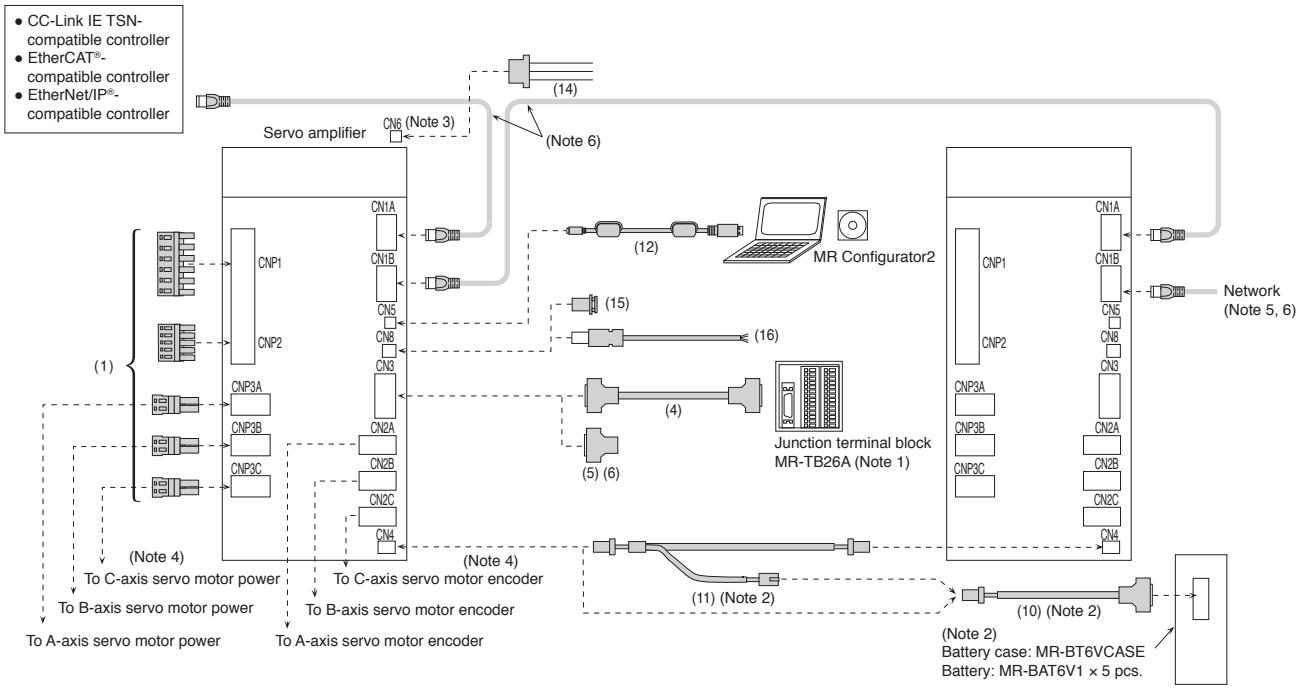

Notes: 1. Refer to "Junction Terminal Block" in this catalog.
2. When configuring an absolute position detection system with a direct drive motor, use a battery (MR-BAT6V1SET or MR-BAT6V1SET-A), or a battery case (MR-BT6VCASE) and batteries (MR-BAT6V1 × 5 pieces). When using the battery case, use the indicated cables. Refer to "Battery" or "Battery Case and Battery" in this catalog for details of the battery and connections of the battery case.
3. MR-J5W_-G servo amplifiers have CN6 connector on the top of the unit.
4. CNP3C and CN2C connectors are available for MR-J5W3-G servo amplifiers.
5. When branching off CC-Link IE TSN (synchronous communication function) with a switching hub, use a switching hub (class B) recommended by CC-Link Partner Association. When a switching hub (class A) is used, there are restrictions on the topologies to be used. Refer to the controller user's manual for details.
6. Refer to "Ethernet Cable Specifications" in this catalog for specifications of the Ethernet cable.

Configuration Example for MR-J5D_-_G4

DG

For MR-CV_ and MR-J5D_-_G4

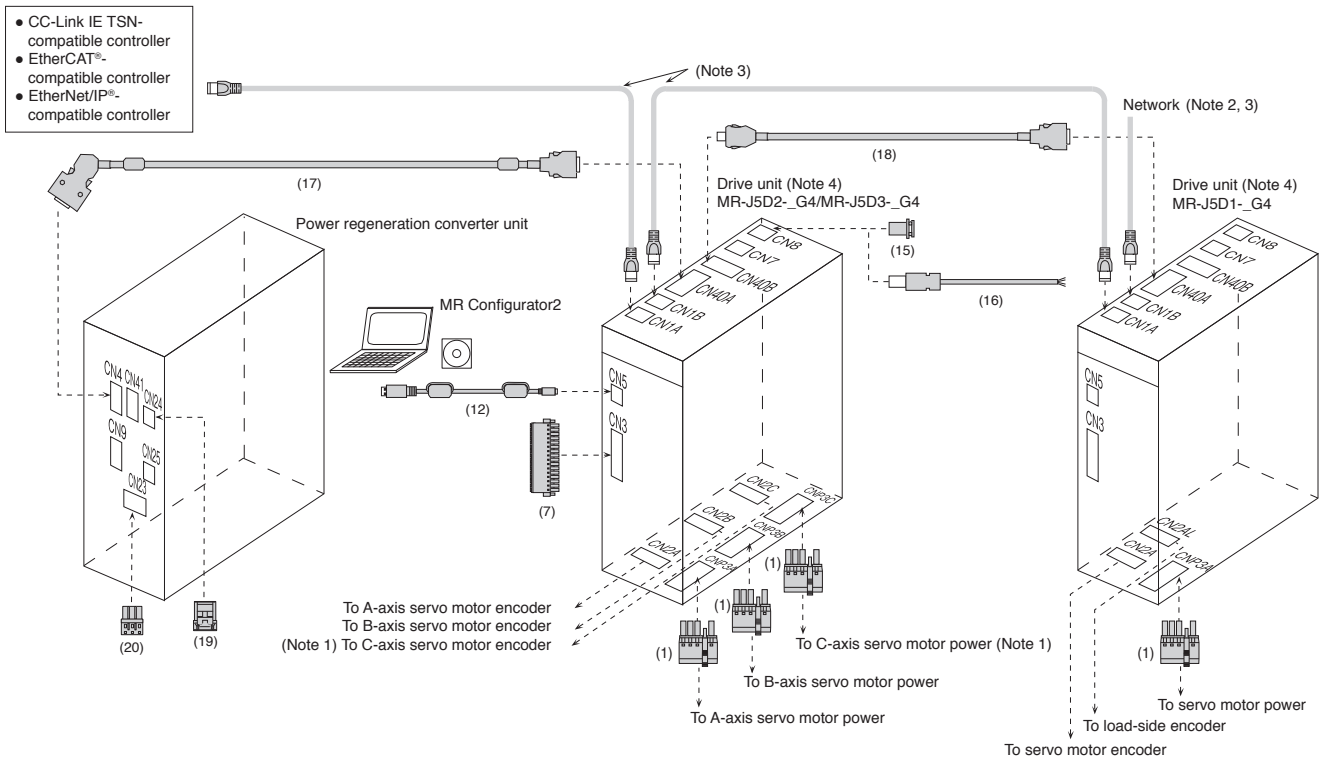

Notes: 1. CNP3C and CN2C connectors are available for MR-J5D3-_G4 drive units.
2. When branching off CC-Link IE TSN (synchronous communication function) with a switching hub, use a switching hub (class B) recommended by CC-Link Partner Association. When a switching hub (class A) is used, there are restrictions on the topologies to be used. Refer to the controller manual for details.
3. Refer to "Ethernet Cable Specifications" in this catalog for specifications of the Ethernet cable.
4. Arrange the drive units in descending order of capacity per axis from the right side of the power regeneration converter unit. When the drive units with the same capacity are used, there are no restrictions on the order.

Ethernet Cable Specifications

Item	CC-Link IE TSN (Note 1, 2)	EtherCAT®	EtherNet/IP®
Cable type	Category 5e or higher, (double shielded/STP) straight cable		
Standard	IEEE802.3 (1000BASE-T) ANSI/TIA/EIA-568-B (Category 5e)	IEEE802.3 (100BASE-TX) ANSI/TIA/EIA-568-B (Category 5e)	IEEE802.3 (10BASE-T/100BASE-TX) ANSI/TIA/EIA-568-B (Category 5e)
Connector	RJ-45 connector with shield		

Notes: 1. Use wiring parts recommended by CC-Link Partner Association for wiring the CC-Link IE TSN.
2. Cables for CC-Link IE Controller Network cannot be used with CC-Link IE TSN.

[Products on the Market]
Ethernet Cable

Application	Model	Specifications	
For indoor	SC-E5EW-S_M	_: cable length (0.5 m, 1 to 100 m (unit of 1 m))	Double shielded cable (Category 5e)
For indoor and moving part	SC-E5EW-S_M-MV	_: cable length (0.1, 0.2, 0.3, 0.5 m, 1 to 45 m (unit of 1 m))	
For indoor/outdoor	SC-E5EW-S_M-L	_: cable length (1 to 100 m (unit of 1 m))	

For details, please contact Mitsubishi Electric System & Service Co., Ltd. OVERSEAS SERVICE SECTION. (Email: osb.webmaster@melsc.jp)

* When using CC-Link IE TSN, refer to the website of CC-Link Partner Association for cables on the market other than above.
https://www.cc-link.org/en/

Configuration Example for MR-J5-_B(-RJ) (Note 8)

B B-RJ

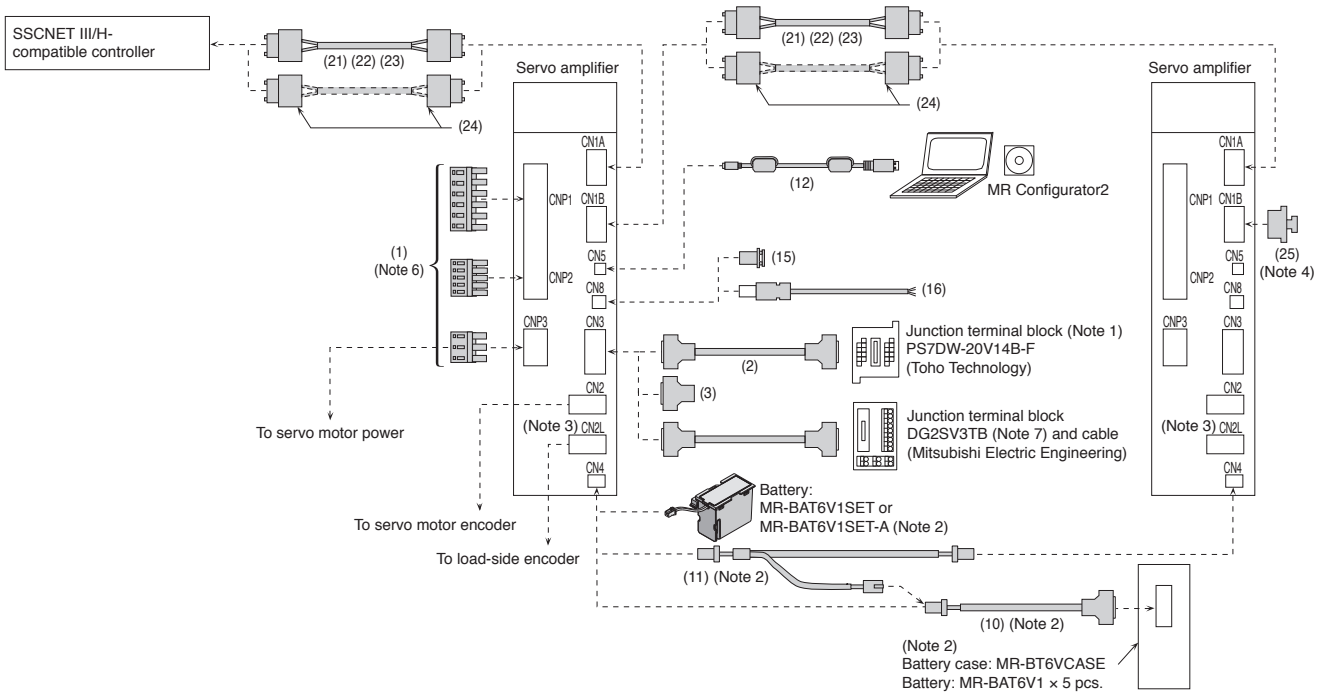

Configuration Example for MR-J5W_-_B (Note 8)

WB

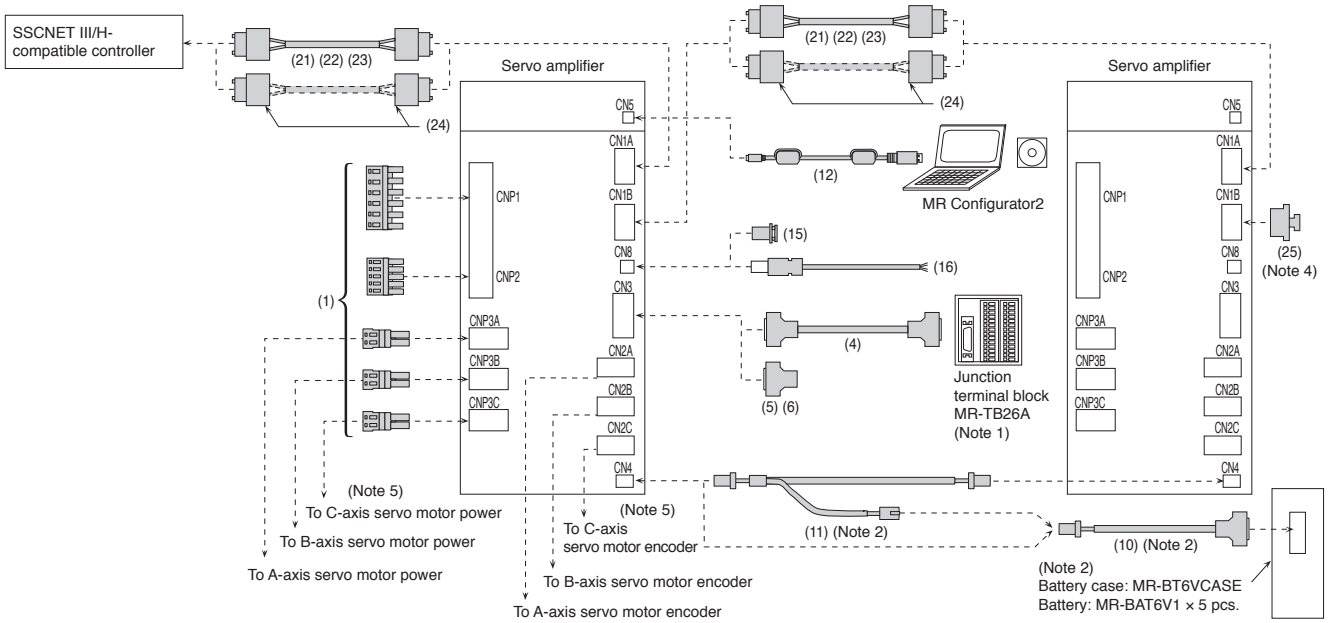

Notes: 1. Refer to "Junction Terminal Block" in this catalog.
2. When configuring an absolute position detection system with a direct drive motor, use a battery (MR-BAT6V1SET or MR-BAT6V1SET-A), or a battery case (MR-BT6VCASE) and batteries (MR-BAT6V1 × 5 pieces). When using the battery case, use the indicated cables. Refer to "Battery" or "Battery Case and Battery" in this catalog for details of the battery and connections of the battery case.
3. CN2L connector is available for MR-J5-B-RJ servo amplifiers.
4. Attach a cap to CN1B connector of the final axis.
5. CNP3C and CN2C connectors are available for MR-J5W3-B servo amplifiers.
6. The shape and position of the power connector are different from those of the indicated connector for some servo amplifier capacities. Refer to the dimensions for details.
7. Refer to "Products on the Market for Servo Amplifiers Mitsubishi Electric Engineering" in this catalog for details.
8. Cables drawn with dashed lines need to be fabricated by users. Refer to "MR-J5 User's Manual" when fabricating the cables.

Configuration Example for MR-J5-_A(-RJ) (Note 4)

A A-RJ

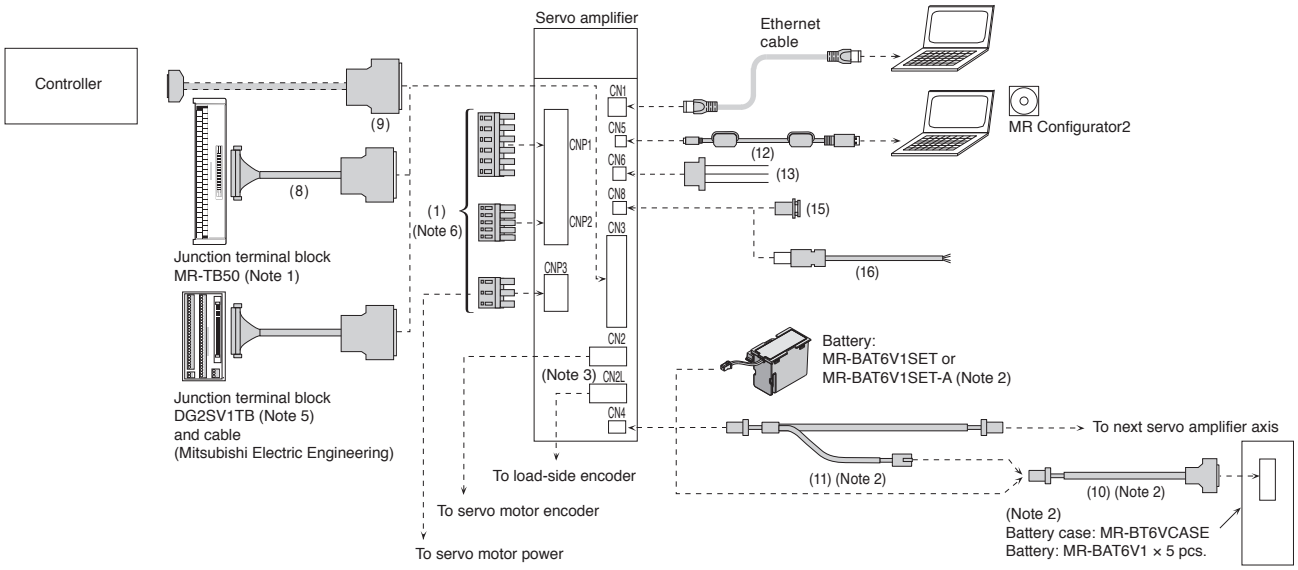

Notes: 1. Refer to "Junction Terminal Block" in this catalog.
2. When configuring an absolute position detection system with a direct drive motor, use a battery (MR-BAT6V1SET or MR-BAT6V1SET-A), or a battery case (MR-BT6VCASE) and batteries (MR-BAT6V1 × 5 pieces). When using the battery case, use the indicated cables. Refer to "Battery" or "Battery Case and Battery" in this catalog for details of the battery and connections of the battery case.
3. CN2L connector is available for MR-J5-A-RJ servo amplifiers.
4. Cables drawn with dashed lines need to be fabricated by users. Refer to "MR-J5 User's Manual" when fabricating the cables.
5. Refer to p. 7-54 in this catalog for details.
6. The shape and position of the power connector are different from those of the indicated connector for some servo amplifier capacities. Refer to the dimensions for details.

Cables and Connectors for Servo Amplifiers

Refer to "Details of Option Connectors for Servo Amplifiers" in this catalog for the detailed models.

No.		Item	Application	Cable length	Model	Description
For CNP1/CNP1A/CNP1B/CNP2/CNP3/CNP3A/CNP3B/CNP3C	(1)	Servo amplifier power connector set	MR-J5-100G(-RJ) or smaller/ MR-J5-100B(-RJ) or smaller/ MR-J5-100A(-RJ) or smaller	-	(Standard accessory)	CNP1 connector, CNP2 connector, CNP3 connector, Open tool  Applicable wire size (Note 1): AWG 18 to 14 Insulator OD: 3.9 mm or smaller
			MR-J5-200G(-RJ)/ MR-J5-200B(-RJ)/ MR-J5-200A(-RJ)/ MR-J5-350G(-RJ)/ MR-J5-350B(-RJ)/ MR-J5-350A(-RJ)			CNP1 connector, CNP2 connector, CNP3 connector, Open tool  CNP1/CNP3 connector Applicable wire size (Note 1): AWG 16 to 10 Insulator OD: 4.7 mm or smaller CNP2 connector Applicable wire size (Note 1): AWG 18 to 14 Insulator OD: 3.9 mm or smaller
			MR-J5-500G(-RJ)/ MR-J5-500B(-RJ)/ MR-J5-500A(-RJ)/ MR-J5-700G(-RJ)/ MR-J5-700B(-RJ)/ MR-J5-700A(-RJ)			CNP1A connector, CNP1B connector, CNP3 connector, Open tool  CNP1A/CNP1B/CNP3 connector Applicable wire size (Note 1): AWG 18 to 8 Insulator OD: 7.6 mm or smaller CNP2 connector, Open tool  CNP2 connector Applicable wire size (Note 1): AWG 18 to 14 Insulator OD: 3.9 mm or smaller
			MR-J5-350G4(-HS/-RJ) or smaller/ MR-J5-350B4(-RJ) or smaller/ MR-J5-350A4(-RJ) or smaller			CNP1 connector, CNP2 connector, CNP3 connector, Open tool  Applicable wire size (Note 1): AWG 18 to 14 Insulator OD: 3.9 mm or smaller
			MR-J5-500G4(-HS)/ MR-J5-500B4(-RJ)/ MR-J5-500A4(-RJ)/ MR-J5-700G4(-HS)/ MR-J5-700B4(-RJ)/ MR-J5-700A4(-RJ)			CNP1 connector, CNP2 connector, CNP3 connector  Applicable wire size (Note 1): AWG 20 to 8 Insulator OD: 6.6 mm or smaller
			MR-J5W2-44G or smaller/ MR-J5W2-44B or smaller/ MR-J5W3-444G or smaller/ MR-J5W3-444B or smaller			CNP1 connector, CNP2 connector, CNP3_ (Note 2) connector, Open tool  Applicable wire size (Note 1): AWG 18 to 14 Insulator OD: 3.9 mm or smaller
			MR-J5W2-77G or larger/ MR-J5W2-77B or larger			CNP1 connector, CNP2 connector, CNP3_ (Note 2) connector, Open tool  CNP1 connector Applicable wire size (Note 1): AWG 16 to 10 Insulator OD: 4.7 mm or smaller CNP2, CNP3_ connector Applicable wire size (Note 1): AWG 18 to 14 Insulator OD: 3.9 mm or smaller

Notes: 1. The wire size shows wiring specifications of the connector. Refer to "Selection Example in HIV Wires for Servo Motors" in this catalog for examples of wire size selection.
2. MR-J5W2-_G/MR-J5W2-_B: CNP3A/CNP3B, MR-J5W3-_G/MR-J5W3-_B: CNP3A/CNP3B/CNP3C

Cables and Connectors for Servo Amplifiers

Refer to "Details of Option Connectors for Servo Amplifiers" in this catalog for the detailed models.

No.		Item	Application	Cable length	Model	Description
For CNP3	(1)	Drive unit power connector set	MR-J5D_-_G4	-	(Standard accessory)	CNP3_ (Note 2) connector Open tool*  CNP3_ connector Applicable wire size (Note 1): AWG 24 to 8 Insulator OD: 10 mm or smaller * The open tool is not supplied with a drive unit. The open tool must be prepared by users.
For CN3	(2)	Junction terminal block cable	Connecting MR-J5-_G_(-RJ)/ MR-J5-_B_(-RJ) and PS7DW-20V14B-F	0.5 m	MR-J2HBUS05M	Servo amplifier connector Junction terminal block connector 
				1 m	MR-J2HBUS1M	
				5 m	MR-J2HBUS5M	
	(3)	Connector set	MR-J5-_G_(-RJ)/ MR-J5-_B_(-RJ)	-	MR-CCN1	 Servo amplifier connector
	(4)	Junction terminal block cable	Connecting MR-J5W_-_G/ MR-J5W_-_B and MR-TB26A	0.5 m	MR-TBNATBL05M	Servo amplifier connector Junction terminal block connector 
				1 m	MR-TBNATBL1M	
	(5)	Connector set (Qty: 1 pc.)	MR-J5W_-_G/ MR-J5W_-_B	-	MR-J2CMP2	 Servo amplifier connector
	(6)	Connector set (Qty: 20 pcs.)	MR-J5W_-_G/ MR-J5W_-_B	-	MR-ECN1	
	(7)	I/O and monitor connector	MR-J5D_-_G4	-	MR-ADCN3	 Drive unit connector
	(8)	Junction terminal block cable	Connecting MR-J5-_A_(-RJ) and MR-TB50	0.5 m	MR-J2M-CN1TBL05M	Junction terminal block connector Servo amplifier connector 
				1 m	MR-J2M-CN1TBL1M	
	(9)	Connector set	MR-J5-_A_(-RJ)	-	MR-J3CN1	 Servo amplifier connector
For CN4	(10)	Battery cable	Connecting MR-J5-_G(-RJ)/ MR-J5W_-_G/ MR-J5-_B(-RJ)/ MR-J5W_-_B/ MR-J5-_A(-RJ), MR-BT6VCASE	0.3 m	MR-BT6V1CBL03M	Servo amplifier connector Battery case connector 
				1 m	MR-BT6V1CBL1M	
	(11)	Junction battery cable	MR-J5-_G(-RJ)/ MR-J5W_-_G/ MR-J5-_B(-RJ)/ MR-J5W_-_B/ MR-J5-_A(-RJ)	0.3 m	MR-BT6V2CBL03M	Servo amplifier connector 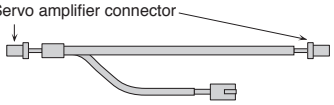 Junction connector
				1 m	MR-BT6V2CBL1M	
For CN5	(12)	Personal computer communication cable (USB cable)	MR-J5-_G_(-HS/-RJ)/ MR-J5W_-_G/ MR-J5D_-_G4/ MR-J5-_B_(-RJ)/ MR-J5W_-_B/ MR-J5-_A_(-RJ)	3 m	MR-J3USBCBL3M	Servo amplifier connector mini-B connector (5-pin) Personal computer connector A connector 

Notes: 1. The wire size shows wiring specifications of the connector. Refer to "Selection Example in HIV Wires for Servo Motors" in this catalog for examples of wire size selection.
2. MR-J5D1-_G4: CNP3A, MR-J5D2-_G4: CNP3A/CNP3B, MR-J5D3-_G4: CNP3A/CNP3B/CNP3C

Cables and Connectors for Servo Amplifiers

Refer to "Details of Option Connectors for Servo Amplifiers" in this catalog for the detailed models.

No.		Item	Application	Cable length	Model	Description
For CN6	(13)	Monitor cable	MR-J5-_G_(-RJ)/ MR-J5-_A_(-RJ)	1 m	MR-ACN6CBL1M	Servo amplifier connector 
	(14)	Monitor cable	MR-J5W_-_G	1 m	MR-J3CN6CBL1M	
For CN8	(15)	Short-circuit connector	MR-J5-_G_(-RJ)/ MR-J5W_-_G/ MR-J5D_-_G4/ MR-J5-_B_(-RJ)/ MR-J5W_-_B/ MR-J5-_A_(-RJ)	-	(Standard accessory)	 This connector is required when the STO function is not used.
	(16)	STO cable	Connecting MR-J3-D05 or another safety control device with MR-J5-_G_(-RJ)/ MR-J5W_-_G/ MR-J5D_-_G4/ MR-J5-_B_(-RJ)/ MR-J5W_-_B/ MR-J5-_A_(-RJ)	3 m	MR-D05UDL3M-B	Servo amplifier connector 
For power regeneration converter unit CN4/drive unit CN40A	(17)	Protection coordination cable	MR-CV11K4 to MR-CV45K4 and MR-J5D_-_G4	0.2 m	MR-ACDL02M	Power regeneration converter unit connector Drive unit connector 
			MR-CV55K4/MR-CV75K4 and MR-J5D_-_G4	0.5 m	MR-ACDL05M	
For drive unit CN40A/ CN40B	(18)	Protection coordination cable	MR-J5D_-_G4	0.2 m	MR-ADDL02M	Drive unit connector Drive unit connector 
For power regeneration converter unit CN24	(19)	Connector set (Note 1)	MR-CV_	-	MR-CVCN24S	Power regeneration converter unit connector 
For power regeneration converter unit CN23	(20)	Magnetic contactor wiring connector	MR-CV_	-	(Standard accessory)	Power regeneration converter unit connector  Open tool 

Notes: 1. A crimping tool (357J-22733) manufactured by DDK Ltd. is required. Contact the manufacturer directly.

Cables and Connectors for Servo Amplifiers

Refer to "Details of Option Connectors for Servo Amplifiers" in this catalog for the detailed models.

No.		Item	Application	Cable length	Model	Description
For controller/CN1A/CN1B	(21)	SSCNET III cable (Note 1) (standard cord inside cabinet) Compatible with SSCNET III/H	MR-J5-_B_(-RJ)/ MR-J5W_-_B	0.15 m	MR-J3BUS015M	
				0.3 m	MR-J3BUS03M	
				0.5 m	MR-J3BUS05M	
				1 m	MR-J3BUS1M	
				3 m	MR-J3BUS3M	
	(22)	SSCNET III cable (Note 1) (standard cable outside cabinet) Compatible with SSCNET III/H	MR-J5-_B_(-RJ)/ MR-J5W_-_B	5 m	MR-J3BUS5M-A (Note 4)	SSCNET III/H connector — SSCNET III/H connector
				10 m	MR-J3BUS10M-A (Note 4)	
				20 m	MR-J3BUS20M-A (Note 4)	
	(23)	SSCNET III cable (Note 1, 3) (long distance cable, long bending life) Compatible with SSCNET III/H	MR-J5-_B_(-RJ)/ MR-J5W_-_B	30 m	MR-J3BUS30M-B (Note 4)	
				40 m	MR-J3BUS40M-B (Note 4)	
				50 m	MR-J3BUS50M-B (Note 4)	
	(24)	SSCNET III connector set (Note 1, 2) Compatible with SSCNET III/H	MR-J5-_B_(-RJ)/ MR-J5W_-_B	-	MR-J3BCN1	SSCNET III/H connector — SSCNET III/H connector
For CN1B	(25)	SSCNET III connector cap Compatible with SSCNET III/H	MR-J5-_B_(-RJ)/ MR-J5W_-_B	-	(Standard accessory)	
For CN3	(26)	Connector set	MR-J5-_G_-HS	-	(Standard accessory)	Servo amplifier connector Applicable wire size: AWG 24 to 16
For CN7	(27)	Analog monitor and A/B/Z-phase pulse output cable	MR-J5-_G_-HS	10 m/ 2 m	MR-AHSCN7CBL2M10M	Servo amplifier connector 10 m 2 m For A/B/Z-phase pulse output: 10 m For analog monitor: 2 m
	(28)	Connector cap	MR-J5-_G_-HS	-	(Standard accessory)	

Notes: 1. Read carefully through the precautions enclosed with the options before use.
2. Dedicated tools are required. Contact your local sales office for more details.
3. For cables over 50 m or with ultra-long bending life, refer to "Products on the Market for Servo Amplifiers" in this catalog.
4. For unlisted lengths of the cables, please contact Mitsubishi Electric System & Service Co., Ltd. OVERSEAS SERVICE SECTION. (Email: osb.webmaster@melsc.jp)

Bus Bar

DG

For connecting L+/L- terminals between a converter unit and a drive unit and between drive units, use bus bars. Each of the bar models in the table includes a set of two bus bars.

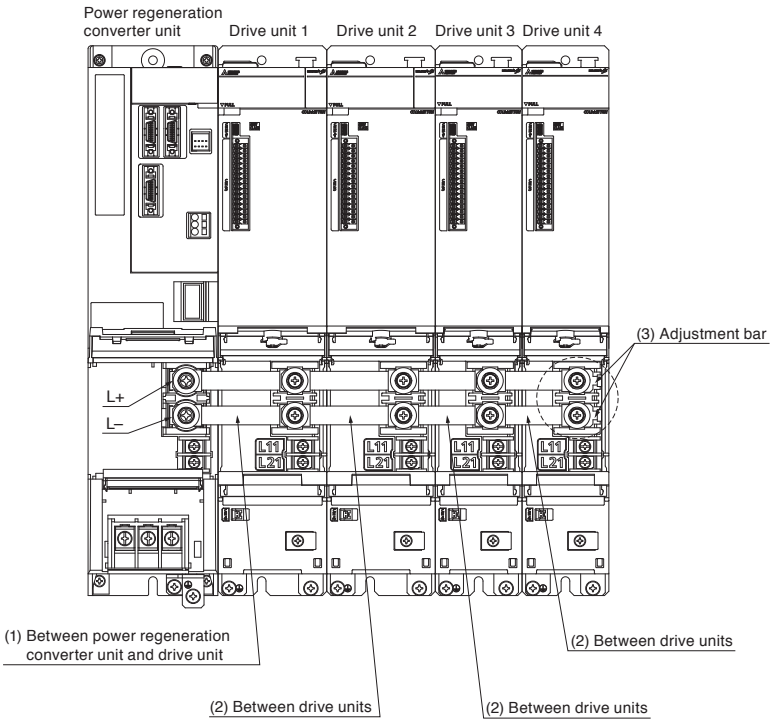

(1) Between power regeneration converter unit and drive unit

Unit mounted on the left side (Note 1)	Unit mounted on the right side (Note 1)	Bus bar model
MR-CV11K4 MR-CV18K4	MR-J5D1-700G4 or smaller, MR-J5D2-350G4 or smaller, MR-J5D3-200G4 or smaller	MR-DCBAR077-B02
	MR-J5D2-500G4, MR-J5D2-700G4	MR-DCBAR092-B02
MR-CV30K4 MR-CV37K4 MR-CV45K4	MR-J5D1-700G4 or smaller, MR-J5D2-350G4 or smaller, MR-J5D3-200G4 or smaller	MR-DCBAR097-B02
	MR-J5D2-500G4, MR-J5D2-700G4	MR-DCBAR112-B02
MR-CV55K4 MR-CV75K4	MR-J5D1-700G4 or smaller, MR-J5D2-350G4 or smaller, MR-J5D3-200G4 or smaller	MR-DCBAR099-B03
	MR-J5D2-500G4, MR-J5D2-700G4	MR-DCBAR114-B03

(2) Between drive units

Unit mounted on the left side (Note 1)	Unit mounted on the right side (Note 1)	Bus bar model
MR-J5D1-700G4 or smaller, MR-J5D2-350G4 or smaller, MR-J5D3-200G4 or smaller	MR-J5D1-700G4 or smaller, MR-J5D2-350G4 or smaller, MR-J5D3-200G4 or smaller	MR-DCBAR077-B02
	MR-J5D2-500G4, MR-J5D2-700G4	MR-DCBAR092-B02
MR-J5D2-500G4, MR-J5D2-700G4	MR-J5D1-700G4 or smaller, MR-J5D2-350G4 or smaller, MR-J5D3-200G4 or smaller	MR-DCBAR077-B02
	MR-J5D2-500G4, MR-J5D2-700G4	MR-DCBAR092-B02

(3) For final drive unit

When an even number of drive units is connected to the power regeneration converter unit, a space is formed between the bus bars and the TE2 terminal block of the final drive unit. To fill this space, place adjustment bars (MR-DCBAR024-B05) between the bus bars and the TE2 terminal block, and tighten the screws.

Total number of drive units	Adjustment bar model
Even	MR-DCBAR024-B05
Odd	Not required

Notes: 1. "Unit mounted on the left side" and "Unit mounted on the right side" indicate the position when the units are seen from the front. Install the power regeneration converter unit on the left side of the drive unit.

Configuration Example for MR-CM

G | G-RJ | WG | B | B-RJ | WB | A | A-RJ

Connectors for MR-CM

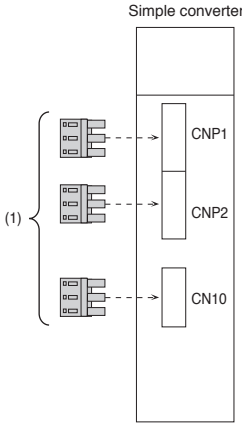

Connectors for daisy chain wiring (Note 2)

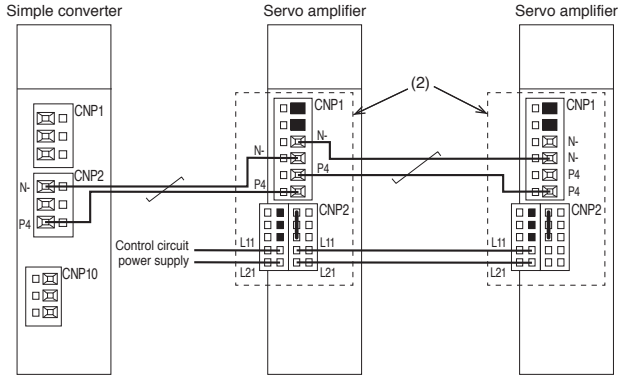

Cables and Connectors for MR-CM

Refer to "Details of Option Connectors for MR-CM" in this catalog for the detailed models.

No.	Item	Application	Model	Description
(1)	Simple converter connector set	MR-CM3K	(Standard accessory)	CNP1 connector / CNP2 connector / CNP10 connector / Open tool  CNP1, CNP2 connector Applicable wire size (Note 1): AWG 16 to 10 Insulator OD: 4.7 mm or smaller CNP10 connector Applicable wire size (Note 1): AWG 18 to 14 Insulator OD: 3.9 mm or smaller
(2)	Daisy chain power connector	MR-J5-100G(-RJ) or smaller/ MR-J5W2-44G or smaller/ MR-J5W3-444G or smaller/ MR-J5-100B(-RJ) or smaller/ MR-J5W2-44B or smaller/ MR-J5W3-444B or smaller/ MR-J5-100A(-RJ) or smaller	MR-J5CNP12-J1	CNP1 connector / CNP2 connector  CNP1 connector Applicable wire size (Note 1): AWG 18 to 10 Insulator OD: 4.7 mm or smaller CNP2 connector Applicable wire size (Note 1): AWG 18 to 14 Insulator OD: 3.9 mm or smaller
		MR-J5-200G(-RJ)/ MR-J5W2-77G or larger/ MR-J5-200B(-RJ)/ MR-J5W2-77B or larger/ MR-J5-200A(-RJ)	MR-J5CNP12-J2	CNP1 connector / CNP2 connector 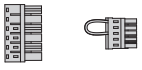 CNP1 connector Applicable wire size (Note 1): AWG 16 to 10 Insulator OD: 4.7 mm or smaller CNP2 connector Applicable wire size (Note 1): AWG 18 to 14 Insulator OD: 3.9 mm or smaller

Notes: 1. The wire size shows wiring specifications of the connector. Refer to "Wires, Molded-Case Circuit Breakers, and Magnetic Contactors" in this catalog for examples of wire size selection.
2. When mounting the servo amplifiers, follow the restrictions indicated in "MR-J5 User's Manual".

Configuration Example for MR-J3-D05

G G-RJ WG DG B B-RJ WB A A-RJ

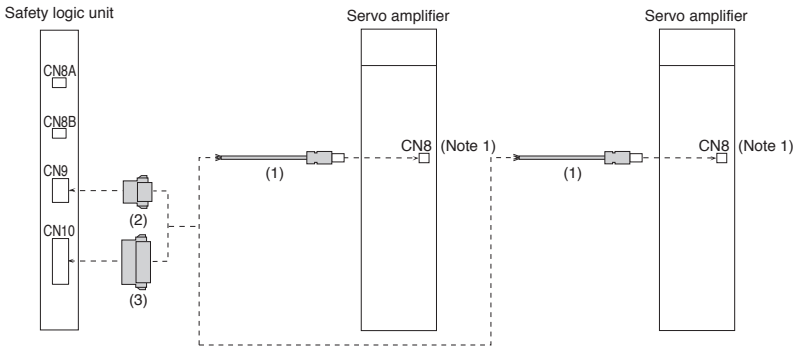

Cables and Connectors for MR-J3-D05

Refer to "Details of Option Connectors for MR-J3-D05" in this catalog for the detailed models.

No.		Item	Application	Cable length	Model	Description
For CN8	(1)	STO cable	Connecting MR-J3-D05 or another safety control device with MR-J5-_G_(-RJ)/ MR-J5W_-_G/ MR-J5D_-_G4/ MR-J5-_B_(-RJ)/ MR-J5W_-_B/ MR-J5-_A_(-RJ)	3 m	MR-D05UDL3M-B	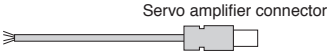
For CN9	(2)	Connector	MR-J3-D05	-	(Standard accessory of MR-J3-D05)	 Safety logic unit connector
For CN10	(3)	Connector	MR-J3-D05	-	(Standard accessory of MR-J3-D05)	 Safety logic unit connector

Notes: 1. Attach a short-circuit connector supplied with the servo amplifier when the STO function is not used.

Details of Option Connectors for Servo Amplifiers

Model	CNP1 connector	CNP2 connector	CNP3 connector	Open tool
Servo amplifier power connector set For MR-J5-100G(-RJ) or smaller/ MR-J5-100B(-RJ) or smaller/ MR-J5-100A(-RJ) or smaller (standard accessory)	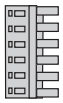 06JFAT-SAXGDK-K7.5 (LA) (J.S.T. Mfg. Co., Ltd.)	 05JFAT-SAXGDK-K5.0 (LA) (J.S.T. Mfg. Co., Ltd.)	 03JFAT-SAXGDK-K7.5 (LA) (J.S.T. Mfg. Co., Ltd.)	 J-FAT-OT-K (J.S.T. Mfg. Co., Ltd.)

Model	CNP1 connector	CNP2 connector	CNP3 connector	Open tool
Servo amplifier power connector set For MR-J5-200G(-RJ)/ MR-J5-200B(-RJ)/ MR-J5-200A(-RJ)/ MR-J5-350G(-RJ)/ MR-J5-350B(-RJ)/ MR-J5-350A(-RJ) (standard accessory)	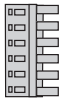 06JFAT-SAXGFK-XL (LA) (J.S.T. Mfg. Co., Ltd.)	 05JFAT-SAXGDK-H5.0 (LA) (J.S.T. Mfg. Co., Ltd.)	 03JFAT-SAXGFK-XL (LA) (J.S.T. Mfg. Co., Ltd.)	 J-FAT-OT-EXL (J.S.T. Mfg. Co., Ltd.)

Model	CNP1A/CNP1B connector	CNP2 connector	CNP3 connector	Open tool
Servo amplifier power connector set For MR-J5-500G(-RJ)/ MR-J5-500B(-RJ)/ MR-J5-500A(-RJ)/ MR-J5-700G(-RJ)/ MR-J5-700B(-RJ)/ MR-J5-700A(-RJ) (standard accessory)	 CNP1A connector 03JFAT-SAXGDK-P15 (LA) (J.S.T. Mfg. Co., Ltd.) CNP1B connector 03JFAT-SAYGDK-P15 (LB) (J.S.T. Mfg. Co., Ltd.)	 CNP2 connector 05JFAT-SAXGDK-H5.0 (LA) (J.S.T. Mfg. Co., Ltd.)	 CNP3 connector 03JFAT-SAZGDK-P15 (LC) (J.S.T. Mfg. Co., Ltd.)	For CNP1A/CNP1B/CNP3 connectors  J-FAT-OT-P (J.S.T. Mfg. Co., Ltd.) For CNP2 connector  J-FAT-OT (N) (J.S.T. Mfg. Co., Ltd.)

Model	CNP1 connector	CNP2 connector	CNP3 connector	Open tool
Servo amplifier power connector set For MR-J5-350G4(-HS/-RJ) or smaller/ MR-J5-350B4(-RJ) or smaller/ MR-J5-350A4(-RJ) or smaller (standard accessory)	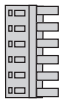 06JFAT-SAXGDK-HT10.5 (LA) (J.S.T. Mfg. Co., Ltd.)	 05JFAT-SAXGDK-HT7.5 (LA) (J.S.T. Mfg. Co., Ltd.)	 03JFAT-SAXGDK-HT10.5 (LA) (J.S.T. Mfg. Co., Ltd.)	 J-FAT-OT-XL (J.S.T. Mfg. Co., Ltd.)

Model	CNP1 connector	CNP2 connector	CNP3 connector
Servo amplifier power connector set For MR-J5-500G4(-HS)/ MR-J5-500B4(-RJ)/ MR-J5-500A4(-RJ)/ MR-J5-700G4(-HS)/ MR-J5-700B4(-RJ)/ MR-J5-700A4(-RJ) (standard accessory)	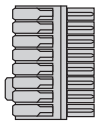 831-1108/MNC (WAGO)	 831-1103/MNB (WAGO)	 831-1103/MNA (WAGO)

Details of Option Connectors for Servo Amplifiers

Model	CNP1 connector	CNP2 connector	CNP3_ connector	Open tool
Servo amplifier power connector set For MR-J5W2-44G or smaller/ MR-J5W3-444G or smaller/ MR-J5W2-44B or smaller/ MR-J5W3-444B or smaller (standard accessory)	 06JFAT-SAXGDK-K7.5 (LB) (J.S.T. Mfg. Co., Ltd.)	 05JFAT-SAXGDK-K5.0 (LA) (J.S.T. Mfg. Co., Ltd.)	 04JFAT-SAGG-G-KK (J.S.T. Mfg. Co., Ltd.)	 J-FAT-OT-K (J.S.T. Mfg. Co., Ltd.)

Model	CNP1 connector	CNP2 connector	CNP3_ connector	Open tool
Servo amplifier power connector set For MR-J5W2-77G or larger/ MR-J5W2-77B or larger (standard accessory)	 06JFAT-SAXGFK-XL (LB) (J.S.T. Mfg. Co., Ltd.)	 05JFAT-SAXGDK-H5.0 (LA) (J.S.T. Mfg. Co., Ltd.)	 04JFAT-SAGG-G-KK (J.S.T. Mfg. Co., Ltd.)	 J-FAT-OT-EXL (J.S.T. Mfg. Co., Ltd.)

Model	CNP3_ connector	Open tool *
Drive unit power connector set For MR-J5D_-_G4 (standard accessory)	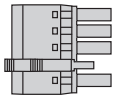 BVF 7.62HP/04/180MF4 SN BK BX LRP (Weidmüller Interface GmbH & Co. KG)	 SDS 0.8X4.5X125 (Weidmüller Interface GmbH & Co. KG) * The open tool is not supplied with a drive unit. The open tool must be prepared by users.

Model	Servo amplifier connector	Junction terminal block connector
MR-J2HBUS_M	 Press bonding type (Note 2) Connector: 10120-6000EL Shell kit: 10320-3210-000 (3M) or an equivalent product	 Press bonding type (Note 2) Connector: 10120-6000EL Shell kit: 10320-3210-000 (3M) or an equivalent product

Model	Servo amplifier connector
MR-CCN1	 Solder type (Note 1) Connector: 10120-3000PE Shell kit: 10320-52F0-008 (3M) or an equivalent product

Model	Servo amplifier connector	Junction terminal block connector
MR-TBNATBL_M	 Connector: 10126-6000EL Shell kit: 10326-3210-000 (3M) or an equivalent product	 Connector: 10126-6000EL Shell kit: 10326-3210-000 (3M) or an equivalent product

Model	Servo amplifier connector
MR-J2CMP2 MR-ECN1	 Connector: 10126-3000PE Shell kit: 10326-52F0-008 (3M) or an equivalent product

Model	I/O and monitor connector
MR-ADCN3	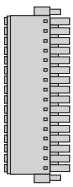 Connector: DFMC 1,5/16-STF-3,5 (Phoenix Contact)

Notes: 1. The press bonding type (connector: 10120-6000EL and shell kit: 10320-3210-000) (3M) is also usable. Contact the manufacturer directly.
2. The solder type (connector: 10120-3000PE and shell kit: 10320-52F0-008) (3M) is also usable. Contact the manufacturer directly.

Details of Option Connectors for Servo Amplifiers

Model	Junction terminal block connector	Servo amplifier connector
MR-J2M-CN1TBL_M	 Connector: D7950-B500FL (3M)	 Press bonding type (Note 1) Connector: 10150-6000EL Shell kit: 10350-3210-000 (3M)

Model	Servo amplifier connector
MR-J3CN1	 Connector: 10150-3000PE Shell kit: 10350-52F0-008 (3M) or an equivalent product

Model	Servo amplifier connector	Battery case connector
MR-BT6V1CBL_M	 Contact: SPHD-001G-P0.5 Housing: PAP-02V-O (J.S.T. Mfg. Co., Ltd.)	 Solder type (Note 2) Connector: 10114-3000PE Shell kit: 10314-52F0-008 (3M) or an equivalent product

Model	Servo amplifier connector	Junction connector
MR-BT6V2CBL_M	 Contact: SPHD-001G-P0.5 Housing: PAP-02V-O (J.S.T. Mfg. Co., Ltd.)	 Contact: SPAL-001GU-P0.5 Housing: PALR-02VF-O (J.S.T. Mfg. Co., Ltd.)

Model	Servo amplifier connector
MR-ACN6CBL1M	 Housing: SHR-03V-S Contact: SSH-003T-P0.2-H (J.S.T. Mfg. Co., Ltd.)

Model	Servo amplifier connector
MR-J3CN6CBL1M	 Housing: 51004-0300 Terminal: 50011-8100 (Molex, LLC) or Housing: 2015S030000 Terminal: 2015TPB0000 (Leoco (Suzhou) Precise Industrial Co., Ltd.) (Note 3)

Model	Servo amplifier connector
MR-D05UDL3M-B	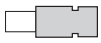 Connector set: 2069250-1 (TE Connectivity)

Model	SSCNET III/H connector	SSCNET III/H connector
MR-J3BUS_M MR-J3BUS_M-A MR-J3BCN1	Connector: PF-2D103 (Japan Aviation Electronics Industry, Limited) 	Connector: PF-2D103 (Japan Aviation Electronics Industry, Limited) 
MR-J3BUS_M-B	Connector: CF-2D103-S (Japan Aviation Electronics Industry, Limited) 	Connector: CF-2D103-S (Japan Aviation Electronics Industry, Limited) 

Model	Servo amplifier connector
Connector set For MR-J5-_G_-HS (standard accessory)	 DFMC 1,5/16-ST-3,5-LRBK (Phoenix Contact) or an equivalent product

Model	Servo amplifier connector
MR-AHSCN7CBL2M10M	 IX30G-B-10S-CVL1(7.0) (Hirose Electric Co., Ltd.)

Notes: 1. The solder type (connector: 10150-3000PE and shell kit: 10350-52F0-008) (3M) is also usable. Contact the manufacturer directly.
2. The press bonding type (connector: 10114-6000EL and shell kit: 10314-3210-000) (3M) is also usable. Contact the manufacturer directly.
3. Contact RYODEN Corporation Device System Headquarters.

Details of Option Connectors for Drive Unit/MR-CV_

Model	Power regeneration converter unit connector	Drive unit connector
MR-ACDL_M	 Plug: 10120-3000PE Shell kit: 10320-56F0-008 (3M) or an equivalent product	 Plug: HDR-E26MG1+ Shell kit: HDR-E26LPJP+ (Honda Tsushin Kogyo Co., Ltd.)

Model	Drive unit connector	Drive unit connector
MR-ADDL02M	 Connector: IX30G-A-10S-CV(7.0) (Hirose Electric Co., Ltd.)	 Plug: HDR-E26MG1+ Shell kit: HDR-E26LPJP+ (Honda Tsushin Kogyo Co., Ltd.)

Model	Power regeneration converter unit connector
MR-CVCN24S	 Connector: DK-2100D-08R Contact: DK-2RECSLP1-100 (DDK Ltd.)

Model	Power regeneration converter unit connector	Open tool
Magnetic contactor wiring connector (Standard accessory of power regeneration converter unit)	 Connector: 03JFAT-SAXGSA-L (J.S.T. Mfg. Co., Ltd.)	 J-FAT-OT-EXL (J.S.T. Mfg. Co., Ltd.)

Details of Option Connectors for MR-CM

Model	CNP1 connector	CNP2 connector	CNP10 connector	Open tool
Simple converter connector set (standard accessory)	 03JFAT-SAYGFK-XL (LB) (J.S.T. Mfg. Co., Ltd.)	 02(16.0)JFAT-SAZGFK-XL (LA) (J.S.T. Mfg. Co., Ltd.)	 02(3-2)JFAT-SAYDFK-K7.5 (J.S.T. Mfg. Co., Ltd.)	 J-FAT-OT-EXL (J.S.T. Mfg. Co., Ltd.)

Model	CNP1 connector	CNP2 connector
MR-J5CNP12-J1	 06JFAT-SAXGDK-KC7.5 (LA) (J.S.T. Mfg. Co., Ltd.)	 05JFAT-SAXGDK-KC5.0 (LA) (J.S.T. Mfg. Co., Ltd.)

Model	CNP1 connector	CNP2 connector
MR-J5CNP12-J2	 06JFAT-SAXGFK-XLC (LA) (J.S.T. Mfg. Co., Ltd.)	 05JFAT-SAXGDK-HC5.0 (LA) (J.S.T. Mfg. Co., Ltd.)

Details of Option Connectors for MR-J3-D05

Model	Servo amplifier connector	
MR-D05UDL3M-B	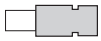	Connector set: 2069250-1 (TE Connectivity)

Model	Safety logic unit connector	
Connector for CN9 of safety logic unit (Standard accessory of MR-J3-D05)		Connector: 1-1871940-4 (TE Connectivity)

Model	Safety logic unit connector	
Connector for CN10 of safety logic unit (Standard accessory of MR-J3-D05)		Connector: 1-1871940-8 (TE Connectivity)

Products on the Market for Servo Amplifiers

SSCNET III Cable

Application	Model	Description	
Standard cable inside cabinet for SSCNET III/H	SC-JXBUS_M	_ = cable length [m] 0.15, 0.3, 0.5, 1, 2, 3	
Standard cable outside cabinet for SSCNET III/H	SC-J4BUS_M-A	_ = cable length (100 m maximum, unit of 1 m)	
Long distance cable, ultra-long bending life cable for SSCNET III/H	SC-J3BUS_M-C		Mitsubishi Electric System & Service Co., Ltd. (Note 1)

Notes: 1. For details, please contact Mitsubishi Electric System & Service Co., Ltd. OVERSEAS SERVICE SECTION. (Email: osb.webmaster@melsc.jp)

Shield connection clamp

The shield connection clamp is used to ground the shield of a servo amplifier I/O signal cable on the top surface of the servo amplifier.

Application	Model	Description	
I/O cable shield connection for MR-J5-500_4_/ MR-J5-700_4_	SCC 15-F (Note 2)	Supported cable diameter: 8 mm to 15 mm	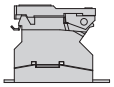 Phoenix Contact (Note 1)

Notes: 1. For details, please contact the relevant manufacturers directly.
2. For installation of this clamp, two screws (M4 × 6 to 12) are required.

Products on the Market for Servo Amplifiers

Mitsubishi Electric Engineering

Network amplifier junction terminal block

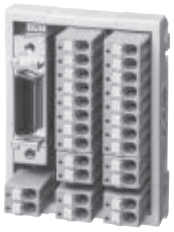

Features

- **The spring clamp type reduces the installation area by about 40 % compared to the screw type (based on the research of Mitsubishi Electric Engineering).**
- **When multiple servo amplifiers are connected, the interface power supply can be connected in series across terminal blocks.**

Connection with servo amplifier

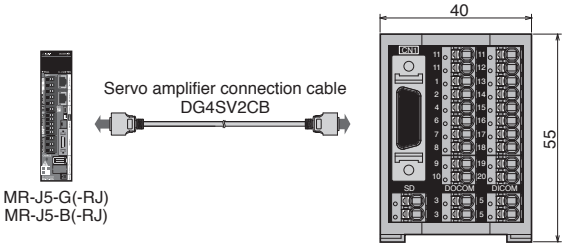

Dimensions

■DG2SV3TB

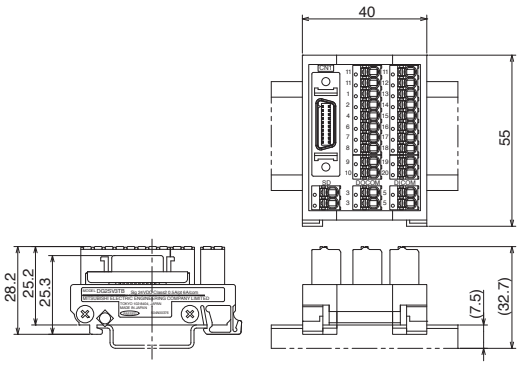

[Unit: mm]

Product models

Item		Model	Description
Network amplifier junction terminal block		DG2SV3TB	For network-connectable 1-axis servo amplifier, sink/source common type External power supply voltage: 24 V DC ± 10 % Maximum usable current: 0.5 A for signal/6 A for common line
	Servo amplifier connection cable	DG4SV2CB05	Length: 0.5 m
		DG4SV2CB10	Length: 1 m
		DG4SV2CB50	Length: 5 m

Junction terminal block for servo motors with brakes



Features

- **Easy to build a brake sequence circuit recommended for MR-J5-G servo amplifiers.**
- **The new terminal block reduces the installation area by up to 50 % compared to preceding types. In addition, fewer wires are required inside the cabinet.**

Connection with servo amplifier

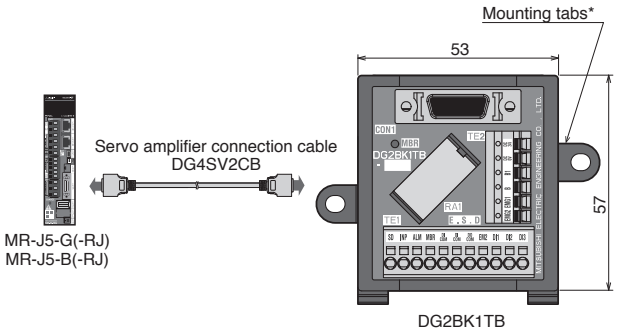

* The DG2BK1TB-D is without mounting tabs.

Dimensions

■DG2BK1TB

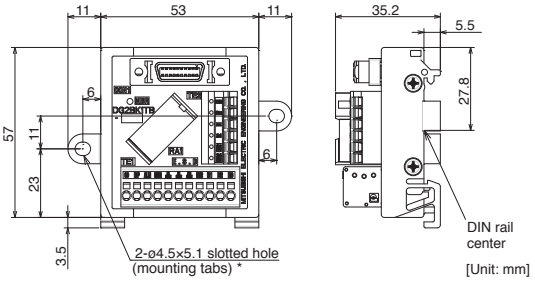

* The DG2BK1TB-D is without mounting tabs.

[Unit: mm]

Product models

Item		Model	Description	
Junction terminal block for motor with brake For network-connectable 1-axis servo amplifier Sink/source common type*		DG2BK1TB	Screw mounting/ DIN rail installation	Applicable servo motor capacity: 50 W to 22 kW External power supply voltage
		DG2BK1TB-D	For DIN rail installation	For servo amplifier interface: 24 V DC (-5 % to 10 %), 0.3 A (max.) For electromagnetic brake: 24 V DC (-10 % to 0 %), 1.43 A (max.) Relay: DSP1a-DC24V (Panasonic Corporation)
	Servo amplifier connection cable	DG4SV2CB05	Length: 0.5 m	
		DG4SV2CB10	Length: 1 m	
		DG4SV2CB50	Length: 5 m	

FLS/RLS/DOG signal-specialized network amplifier terminal block



Features

- **Compact terminal blocks designed specifically for the FLS/RLS (stroke limit) and DOG (proximity dog) signals.**
- **Long cables are available to install the terminal block near the machine. (Long bending life cables are also available.)**

Connection with servo amplifier

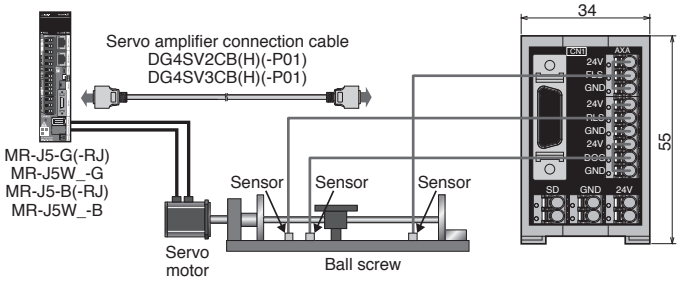

Dimensions

■ **DG2SV2TB (for 1-axis servo amplifier)**

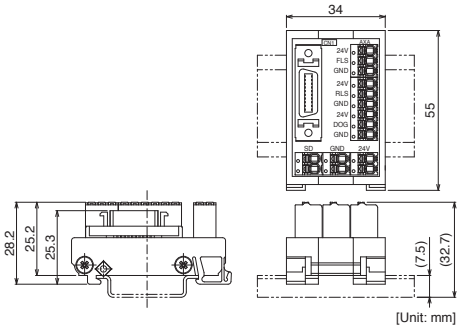

[Unit: mm]

Dimensions

■ **DG2SV2TB2 (for 2-axis servo amplifier)**

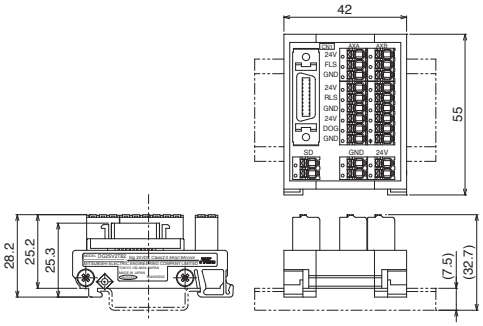

[Unit: mm]

Dimensions

■ **DG2SV2TB3 (for 3-axis servo amplifier)**

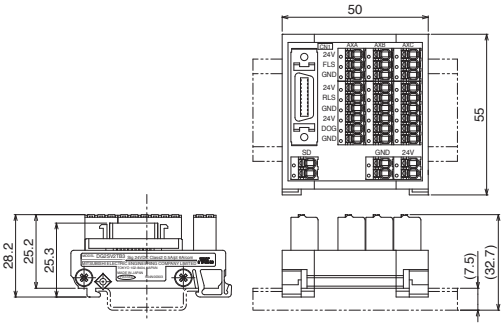

[Unit: mm]

Product models

Item		Model	Description
FLS/RLS/DOG signal-specialized network amplifier terminal block (for 1-axis servo amplifier)		DG2SV2TB	For network-connectable 1-axis servo amplifier Sink/source common type, dedicated for FLS/RLS/DOG signals External power supply voltage: 24 V DC ± 10 % Maximum usable current: 0.5 A for signal / 6 A for common line
	Sink-interface servo amplifier connection cable (for 1-axis servo amplifier)	DG4SV2CB05	Length: 0.5 m
		DG4SV2CB10	Length: 1 m
		DG4SV2CB50	Length: 5 m
	Sink-interface servo amplifier connection cable (for 1-axis servo amplifier / long bending life)	DG4SV2CB50H	Length: 5 m
		DG4SV2CB100H	Length: 10 m
	Source-interface servo amplifier connection cable (for 1-axis servo amplifier)	DG4SV2CB05-P01	Length: 0.5 m
		DG4SV2CB10-P01	Length: 1 m
		DG4SV2CB50-P01	Length: 5 m
	Source-interface servo amplifier connection cable (for 1-axis servo amplifier / long bending life)	DG4SV2CB50H-P01	Length: 5 m
		DG4SV2CB100H-P01	Length: 10 m
FLS/RLS/DOG signal-specialized network amplifier terminal block (for 2-axis/3-axis servo amplifier)		DG2SV2TB2	For network-connectable 2-axis servo amplifier Sink/source common type, dedicated for FLS/RLS/DOG signals External power supply voltage: 24 V DC ± 10 % Maximum usable current: 0.5 A for signal / 6 A for common line
		DG2SV2TB3	For network-connectable 3-axis servo amplifier Sink/source common type, dedicated for FLS/RLS/DOG signals External power supply voltage: 24 V DC ± 10 % Maximum usable current: 0.5 A for signal / 6 A for common line
	Sink-interface servo amplifier connection cable (for 2-axis/3-axis servo amplifier)	DG4SV3CB05	Length: 0.5 m
		DG4SV3CB10	Length: 1 m
		DG4SV3CB50	Length: 5 m
	Sink-interface servo amplifier connection cable (for 2-axis/3-axis servo amplifier/long bending life)	DG4SV3CB50H	Length: 5 m
		DG4SV3CB100H	Length: 10 m
	Source-interface servo amplifier connection cable (for 2-axis/3-axis servo amplifier)	DG4SV3CB05-P01	Length: 0.5 m
		DG4SV3CB10-P01	Length: 1 m
		DG4SV3CB50-P01	Length: 5 m
	Source-interface servo amplifier connection cable (for 2-axis/3-axis servo amplifier/long bending life)	DG4SV3CB50H-P01	Length: 5 m
		DG4SV3CB100H-P01	Length: 10 m

Servo amplifier connection cable for pulse train Positioning modules



Features

■ **This servo amplifier connection cable for pulse train Positioning modules enables easy wiring when the MELSEC Positioning module is used to control the MR-J5-A.**

Dimensions

■ **FA-CBLQ75M2J3, FA-CBLQ75PM2J3**

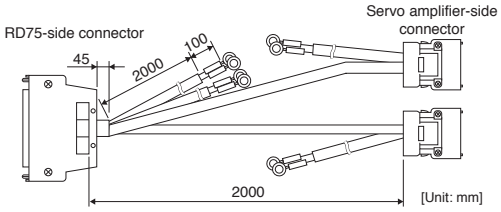

■ **FA-CBLQ75M2J3-P**

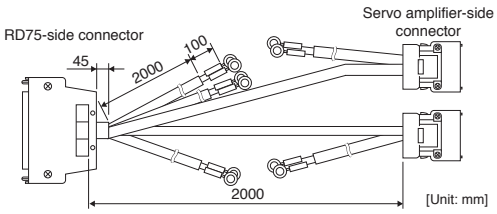

Product models

Item	Model	Description
Servo amplifier connection cable for pulse train Positioning modules	FA-CBLQ75M2J3-P	Supported Positioning module: RD75D2, RD75D4 Length: 2 m, with pulsar cables
	FA-CBLQ75M2J3	Supported Positioning module: RD75D2, RD75D4 Length: 2 m, without pulsar cables
	FA-CBLQ75PM2J3	Supported Positioning module: RD75P2, RD75P4 Length: 2 m, without pulsar cables

General-purpose interface amplifier junction terminal block

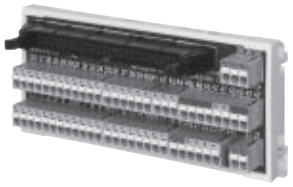

Features

■ **The spring clamp type reduces the installation area by approximately 40 % compared to the screw type (based on the research of Mitsubishi Electric Engineering).**

■ **When multiple servo amplifiers are connected, the interface power supply can be connected in series across up to four terminal blocks.**

Connection with servo amplifier

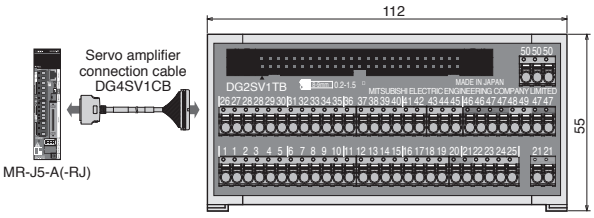

Dimensions

■ **DG2SV1TB**

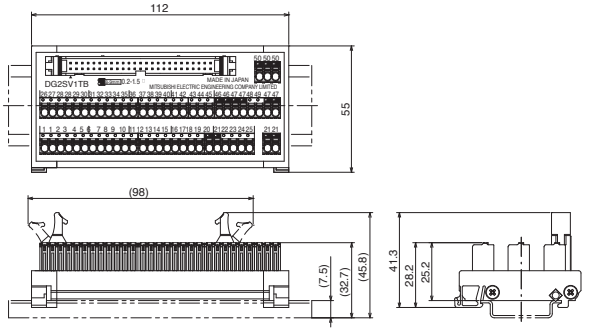

Product models

Item		Model	Description
General-purpose interface amplifier junction terminal block		DG2SV1TB	For general-purpose interface servo amplifier, sink/source common type External power supply voltage: 24 V DC ± 10 %, current capacity 1 A (max.)
	Servo amplifier connection cable	DG4SV1CB05	Length: 0.5 m
		DG4SV1CB10	Length: 1 m

For inquiries about Mitsubishi Electric Engineering products,
please contact us at the following email address. (Supported languages: English and Japanese).

fagoods.products.faq@mitsubishielectricengineering.com

Safety Logic Unit (MR-J3-D05)

G G-RJ WG DG B B-RJ WB A A-RJ

The safety logic unit (MR-J3-D05) has SS1 (Safe Stop1) and STO functions. A combination of the servo amplifier and the safety logic unit achieves SS1 function.

Specifications

Safety logic unit model		MR-J3-D05
Control circuit power supply	Voltage	24 V DC
	Permissible voltage fluctuation	24 V DC ± 10 %
	Required current capacity [A]	0.5 (Note 1, 2)
Compatible system		2 systems (A-axis, B-axis independent)
Shut-off input		2 points (double wiring) SDI_: source/sink compatible (Note 3)
Shut-off release input		1 point (double wiring) SRES_: source/sink compatible (Note 3)
Feedback input		1 point (double wiring) TOF_: source compatible (Note 3)
Input type		Photocoupler insulation, 24 V DC (external supply), internal limited resistance 5.4 kΩ
Shut-off output		4 points (double wiring) STO_: source compatible (Note 3) SDO_: source/sink compatible (Note 3)
Output type		Photocoupler insulation, open-collector type Permissible current: 40 mA or less per output, Inrush current: 100 mA or less per output
Delay time setting		A-axis: select from 0 s, 1.4 s, 2.8 s, 5.6 s, 9.8 s or 30.8 s B-axis: select from 0 s, 1.4 s, 2.8 s, 9.8 s or 30.8 s Accuracy: ±2 %
Safety sub-function		STO, SS1 (IEC/EN 61800-5-2) EMG STOP, EMG OFF (IEC/EN 60204-1)
Safety performance	Standards	ISO 13849-1:2015 Category 3 PL d, EN IEC 62061, EN 61508 SIL 2, IEC 61800-5-2
	Response performance (when delay time is set to 0 s) (Note 4)	10 ms or less (STO input OFF → shut-off output OFF)
	Mean time to dangerous failure (MTTFd)	MTTFd ≥ 100 [years] (516a)
	Diagnostic coverage (DC)	DC = Medium, 93.1 %
	Probability of dangerous Failure per Hour (PFH)	4.75×10^{-9} [1/h]
Standards	CE marking	LVD: EN 61800-5-1 EMC: EN 61800-3 MD: EN ISO 13849-1:2015, EN 61800-5-2, EN IEC 62061
Structure (IP rating)		Natural cooling, open (IP00)
Environment	Ambient temperature	Operation: 0 °C to 55 °C (non-freezing), storage: -20 °C to 65 °C (non-freezing)
	Ambient humidity	Operation/storage: 5 %RH to 90 %RH (non-condensing)
	Ambience	Indoors (no direct sunlight); no corrosive gas, inflammable gas, oil mist or dust
	Altitude	1000 m or less
	Vibration resistance	5.9 m/s^2 at 10 Hz to 55 Hz (directions of X, Y, and Z axes)
Mass	[kg]	0.2 (including CN9 and CN10 connectors)

Notes: 1. Inrush current of approximately 1.5 A flows instantaneously when the power is switched on. Select an appropriate capacity of a power supply considering the inrush current.
2. Power-on duration of the safety logic unit is 100,000 times.
3. _ in signal name indicates a number and axis name.
4. Contact your local sales office for test pulse input.

Safety Logic Unit (MR-J3-D05)

G | G-RJ | WG | DG | B | B-RJ | WB | A | A-RJ

Connection example

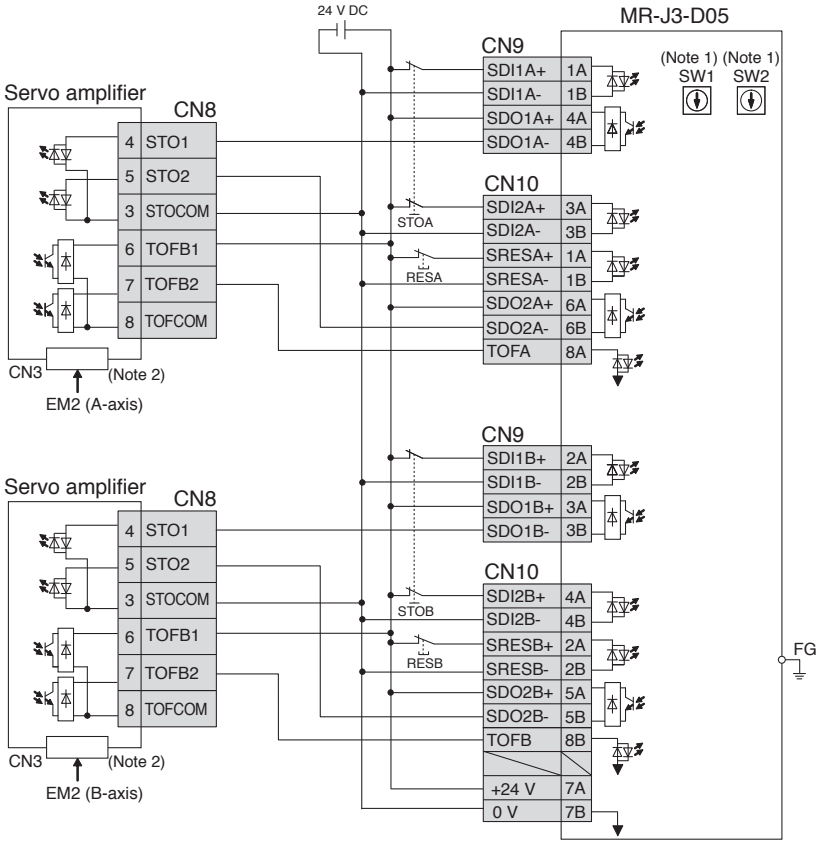

Notes: 1. Set delay time of STO output with SW1 and SW2.
2. This connection is for source interface.

Dimensions

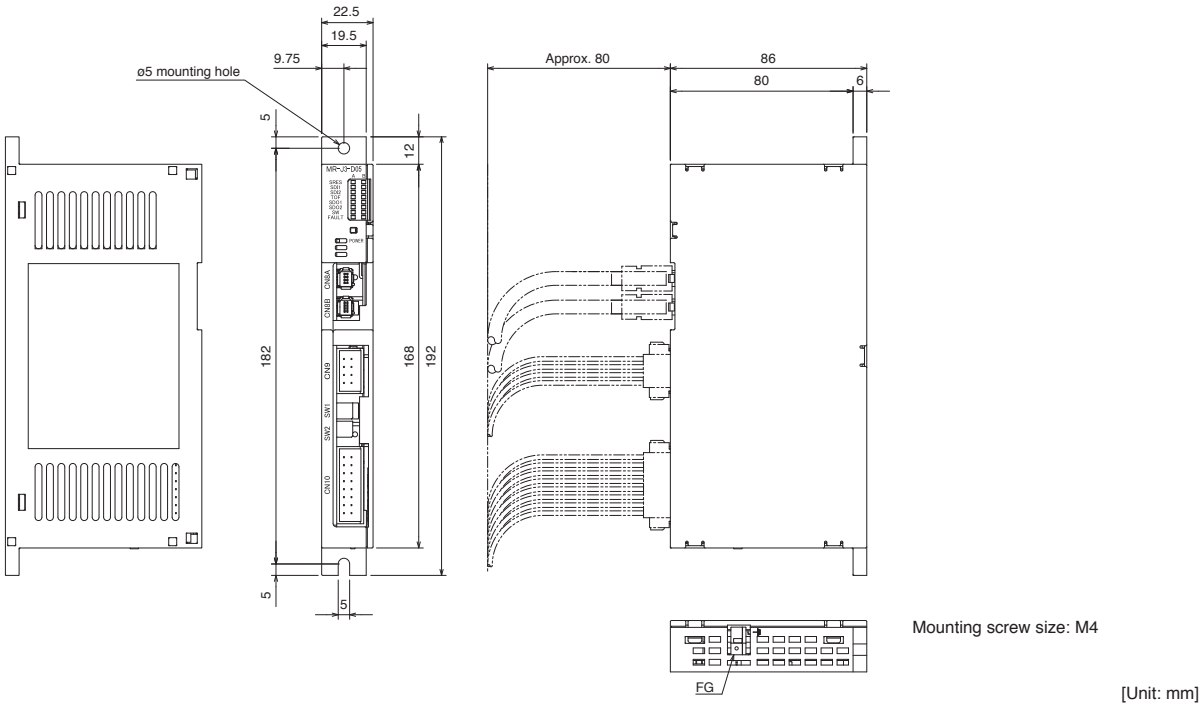

Regenerative Option

G G-HS G-RJ WG B B-RJ WB A A-RJ

For 200 V (MR-RB_)

Servo amplifier model	Permissible regenerative power [W] (Note 2)																		
	Built-in regenerative resistor	External regenerative resistor (standard accessory) (Note 6)			Regenerative option														
		GRZG400-			MR-RB														
		0.8 Ω × 4 (Note 5)	0.6 Ω × 5 (Note 5)	0.5 Ω × 5 (Note 5)	032	12	14	30 (Note 3)	3N (Note 3)	31 (Note 3)	3Z (Note 3, 4)	5R (Note 5)	9F (Note 5)	9T (Note 5)	34 (Note 3)	50 (Note 1)	5N (Note 1)	51 (Note 1)	5Z (Note 1)
					40 Ω	40 Ω	26 Ω	13 Ω	9 Ω	6.7 Ω	5.5 Ω	3.2 Ω	3 Ω	2.5 Ω	26 Ω	13 Ω	9 Ω	6.7 Ω	5.5 Ω
MR-J5-10G/B/A	-	-	-	-	30	-	-	-	-	-	-	-	-	-	-	-	-	-	-
MR-J5-20G/B/A	10	-	-	-	30	100	-	-	-	-	-	-	-	-	-	-	-	-	-
MR-J5-40G/B/A	10	-	-	-	30	100	-	-	-	-	-	-	-	-	-	-	-	-	-
MR-J5-60G/B/A	10	-	-	-	30	100	-	-	-	-	-	-	-	-	-	-	-	-	-
MR-J5-70G/B/A	30	-	-	-	-	-	100	-	-	-	-	-	-	-	300	-	-	-	-
MR-J5-100G/B/A	30	-	-	-	-	-	100	-	-	-	-	-	-	-	300	-	-	-	-
MR-J5-200G/B/A	100	-	-	-	-	-	-	300	-	-	-	-	-	-	-	500	-	-	-
MR-J5-350G/B/A	100	-	-	-	-	-	-	-	300	-	-	-	-	-	-	-	500	-	-
MR-J5-500G/B/A	130	-	-	-	-	-	-	-	-	300	-	-	-	-	-	-	-	500	-
MR-J5-700G/B/A	170	-	-	-	-	-	-	-	-	-	300	-	-	-	-	-	-	-	500
MR-J5-12KG/B/A	-	500 (800)	-	-	-	-	-	-	-	-	-	500 (800)	-	-	-	-	-	-	-
MR-J5-17KG/B/A	-	-	850 (1300)	-	-	-	-	-	-	-	-	-	850 (1300)	-	-	-	-	-	-
MR-J5-25KG/B/A	-	-	-	850 (1300)	-	-	-	-	-	-	-	-	-	850 (1300)	-	-	-	-	-
MR-J5W2-22G/B	20	-	-	-	-	-	100	-	-	-	-	-	-	-	-	-	-	-	-
MR-J5W2-44G/B	20	-	-	-	-	-	100	-	-	-	-	-	-	-	-	-	-	-	-
MR-J5W2-77G/B	100	-	-	-	-	-	-	-	300	-	-	-	-	-	-	-	-	-	-
MR-J5W2-1010G/B	100	-	-	-	-	-	-	-	300	-	-	-	-	-	-	-	-	-	-
MR-J5W3-222G/B	30	-	-	-	-	-	100	-	-	-	-	-	-	-	300	-	-	-	-
MR-J5W3-444G/B	30	-	-	-	-	-	100	-	-	-	-	-	-	-	300	-	-	-	-

For 400 V (MR-RB_-4)

Servo amplifier model	Permissible regenerative power [W] (Note 2)														
	Built-in regenerative resistor	External regenerative resistor (standard accessory) (Note 6)		Regenerative option											
		GRZG400-		MR-RB											
		2.5 Ω × 4 (Note 5)	2 Ω × 5 (Note 5)	1H-4	3M-4 (Note 1)	3G-4 (Note 1)	3Y-4 (Note 1)	34-4 (Note 1)	3U-4 (Note 1)	5G-4 (Note 1)	5Y-4 (Note 1)	54-4 (Note 1)	5U-4 (Note 1)	5K-4 (Note 5)	6K-4 (Note 5)
				82 Ω	120 Ω	47 Ω	36 Ω	26 Ω	22 Ω	47 Ω	36 Ω	26 Ω	22 Ω	10 Ω	10 Ω
MR-J5-60G4/B4/A4	15	-	-	100	300	-	-	-	-	-	-	-	-	-	-
MR-J5-100G4/B4/A4	15	-	-	100	300	-	-	-	-	-	-	-	-	-	-
MR-J5-200G4/B4/A4	100	-	-	-	-	300	-	-	-	500	-	-	-	-	-
MR-J5-350G4/B4/A4	120	-	-	-	-	-	300	-	-	-	500	-	-	-	-
MR-J5-500G4/B4/A4	130	-	-	-	-	-	-	300	-	-	-	500	-	-	-
MR-J5-700G4/B4/A4	170	-	-	-	-	-	-	-	300	-	-	-	500	-	-
MR-J5-12KG4/B4/A4	-	500 (800)	-	-	-	-	-	-	-	-	-	-	-	500 (800)	-
MR-J5-17KG4/B4/A4	-	-	850 (1300)	-	-	-	-	-	-	-	-	-	-	-	850 (1300)
MR-J5-25KG4/B4/A4	-	-	850 (1300)	-	-	-	-	-	-	-	-	-	-	-	850 (1300)

Notes: 1. Cool the unit forcibly with a cooling fan (92 mm × 92 mm, minimum air flow: 1.0 m^3/min). The cooling fan must be prepared by users.
2. The power values in this table are resistor-generated powers, not rated powers.
3. Depending on the operating environment, it may be necessary to cool the unit forcibly with a cooling fan (92 mm × 92 mm, minimum air flow: 1.0 m^3/min). Refer to "MR-J5 User's Manual" for details. The cooling fan must be prepared by users.
4. Use the servo amplifier with firmware version B6 or later.
5. The values in brackets are applicable when cooling fans (two units of 92 mm × 92 mm, minimum air flow: 1.0 m^3/min) are installed, and then [Pr. PA02] is changed.
6. The regenerative resistors enclosed with the servo amplifiers of 12 kW to 25 kW are rated IP00. Take proper safety measures according to system configurations.

* Precautions when installing and connecting the regenerative option

1. The regenerative option causes a temperature rise of 100 °C or higher relative to the ambient temperature. Fully examine heat dissipation, installation position, wires used before installing the unit. Use flame-retardant wires or apply flame retardant on wires, and keep the wires clear of the unit.
2. Use twisted wires for connecting the regenerative option to the servo amplifier, and keep the wire length to a maximum of 5 m.
3. Use twisted wires for connecting a thermal sensor so that the sensor does not fail to work properly because of inducted noise.
4. There are restrictions on the mounting direction of the regenerative option. Refer to "MR-J5 User's Manual" for details.

Regenerative Option

G | G-HS | G-RJ | WG | B | B-RJ | WB | A | A-RJ

Dimensions [Unit: mm]

MR-RB032 (for 200 V)

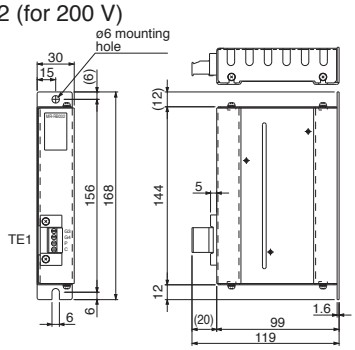

Terminal arrangement

TE1
G3
G4
P
C

Applicable wire size (Note 3):
0.2 mm² to 2.5 mm² (AWG 24 to 12)
Mounting screw size: M5

Model	Mass [kg]
MR-RB032	0.5

MR-RB12, MR-RB14 (for 200 V)

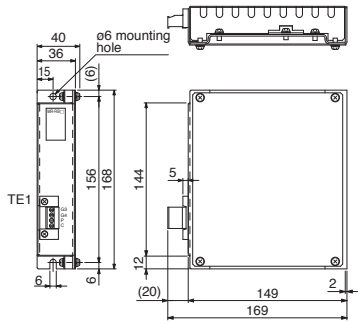

Terminal arrangement

TE1
G3
G4
P
C

Applicable wire size (Note 3):
0.2 mm² to 2.5 mm² (AWG 24 to 12)
Mounting screw size: M5

Model	Mass [kg]
MR-RB12	1.1
MR-RB14	

MR-RB1H-4 (for 400 V)

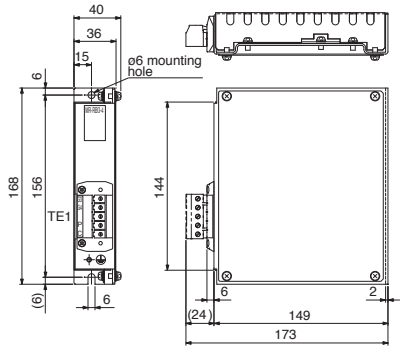

Terminal arrangement

TE1
G3
G4
P
C

Applicable wire size (Note 3):
0.2 mm² to 4.0 mm² (AWG 24 to 10)
Mounting screw size: M5

Model	Mass [kg]
MR-RB1H-4	1.1

Connections

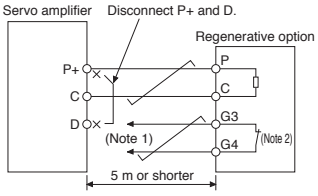

Notes: 1. Create a sequence circuit that turns off the magnetic contactor when abnormal overheating occurs.
2. G3 and G4 terminals are thermal sensor. G3-G4 opens when the regenerative option overheats abnormally.
3. The wire size shows wiring specifications of the connector. Refer to "Wires, Molded-Case Circuit Breakers, and Magnetic Contactors" in this catalog for examples of wire size selection.

Regenerative Option

G | G-HS | G-RJ | WG | B | B-RJ | WB | A | A-RJ

Dimensions [Unit: mm]

MR-RB30, MR-RB3N, MR-RB31, MR-RB3Z, MR-RB34 (for 200 V)
MR-RB3M-4, MR-RB3G-4, MR-RB3Y-4, MR-RB34-4, MR-RB3U-4 (for 400 V)

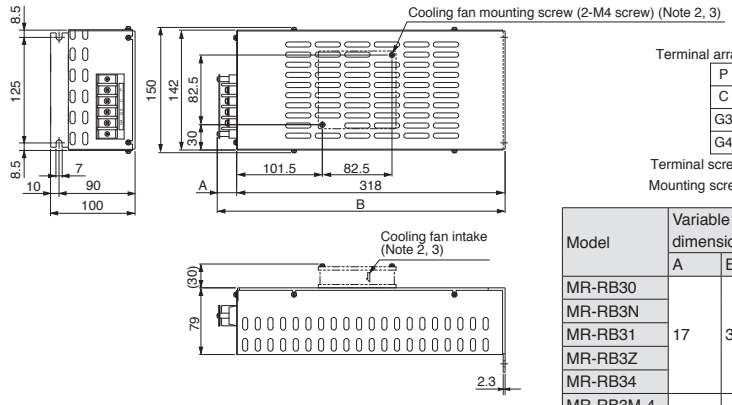

Model	Variable dimensions A	Variable dimensions B	Mass [kg]
MR-RB30	17	335	2.9
MR-RB3N			
MR-RB31			
MR-RB3Z			
MR-RB34			
MR-RB3M-4	23	341	
MR-RB3G-4			
MR-RB3Y-4			
MR-RB34-4			
MR-RB3U-4			

MR-RB50, MR-RB5N, MR-RB51, MR-RB5Z (for 200 V)
MR-RB5G-4, MR-RB5Y-4, MR-RB54-4, MR-RB5U-4 (for 400 V)

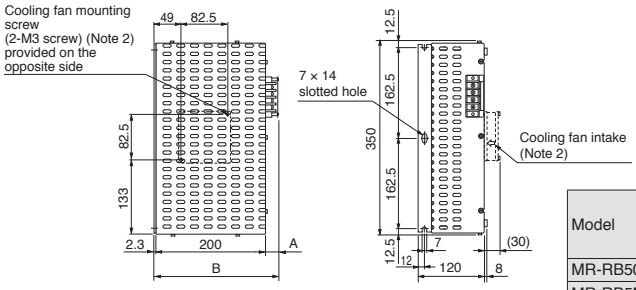

Model	Variable dimensions A	Variable dimensions B	Mass [kg]
MR-RB50	17	217	5.6
MR-RB5N			
MR-RB51			
MR-RB5Z			
MR-RB5G-4	23	223	
MR-RB5Y-4			
MR-RB54-4			
MR-RB5U-4			

Connections

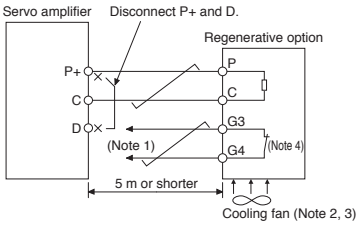

Notes:
1. Create a sequence circuit that turns off the magnetic contactor when abnormal overheating occurs.
2. When using MR-RB3M-4, MR-RB3G-4, MR-RB3Y-4, MR-RB34-4, MR-RB3U-4, MR-RB50, MR-RB5N, MR-RB51, MR-RB5Z, MR-RB5G-4, MR-RB5Y-4, MR-RB54-4, or MR-RB5U-4, cool the unit forcibly with a cooling fan (92 mm × 92 mm, minimum air flow: 1.0 m^3/min). The cooling fan must be prepared by users.
3. When MR-RB30, MR-RB3N, MR-RB31, MR-RB3Z, or MR-RB34 is used, it may be necessary to cool the unit forcibly with a cooling fan (92 mm × 92 mm, minimum air flow: 1.0 m^3/min), depending on the operating environment. Refer to "MR-J5 User's Manual" for details. The cooling fan must be prepared by users.
4. G3 and G4 terminals are thermal sensor. G3-G4 opens when the regenerative option overheats abnormally.

Regenerative Option

G | G-HS | B | B-RJ | A | A-RJ

Dimensions [Unit: mm]

Standard accessory (Note 1)
GRZG400-0.8Ω, GRZG400-0.6Ω, GRZG400-0.5Ω (for 200 V)
GRZG400-2.5Ω, GRZG400-2Ω (for 400 V)

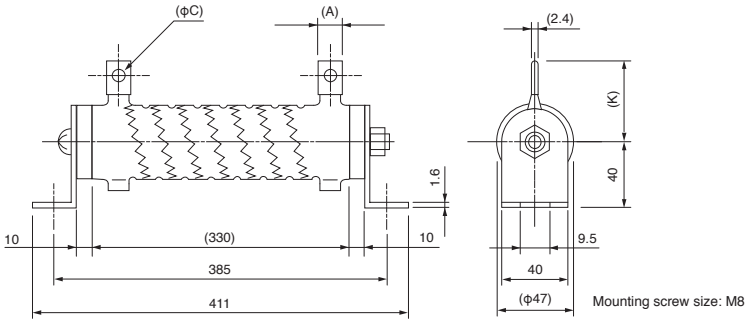

Model	Qty.	Permissible regenerative power [W]	With cooling fan [W]	Resistance value [Ω]	Variable dimensions			Mass/unit [kg]
					A	C	K	
GRZG400-0.8Ω	4	500	800	3.2 (0.8 Ω × 4)	10	5.5	39	0.8
GRZG400-0.6Ω	5	850	1300	3 (0.6 Ω × 5)	16	8.2	46	
GRZG400-0.5Ω	5	850	1300	2.5 (0.5 Ω × 5)				
GRZG400-2.5Ω	4	500	800	10 (2.5 Ω × 4)	10	5.5	39	
GRZG400-2Ω	5	850	1300	10 (2 Ω × 5)				

Connections

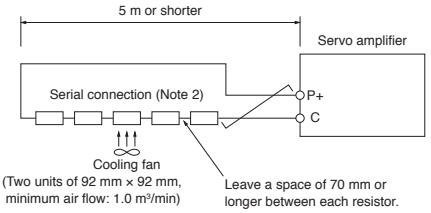

MR-RB5R, MR-RB9F, MR-RB9T (for 200 V) (Note 1)
MR-RB5K-4, MR-RB6K-4 (for 400 V) (Note 1)

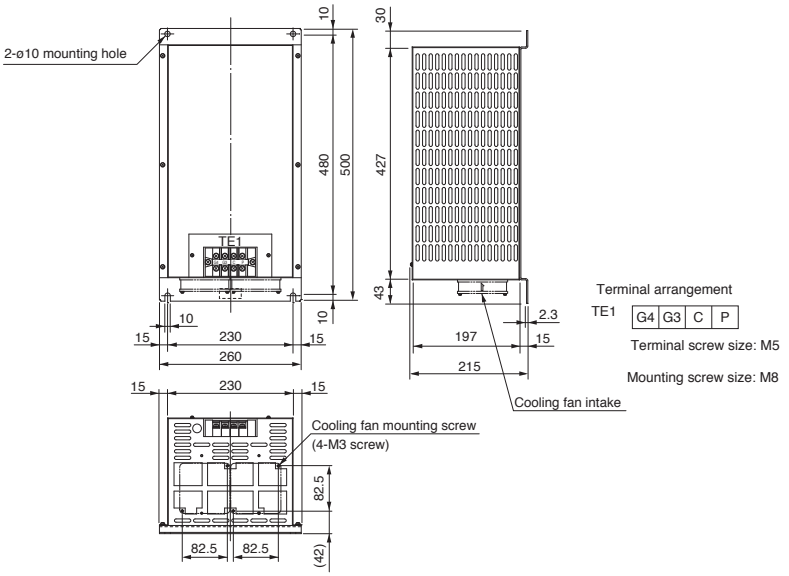

Model	Permissible regenerative power [W]	With cooling fan [W]	Description	Mass [kg]
MR-RB5R	500	800	GRZG400-0.8Ω × 4	10
MR-RB9F	850	1300	GRZG400-0.6Ω × 5	11
MR-RB9T	850	1300	GRZG400-0.5Ω × 5	11
MR-RB5K-4	500	800	GRZG400-2.5Ω × 4	10
MR-RB6K-4	850	1300	GRZG400-2Ω × 5	11

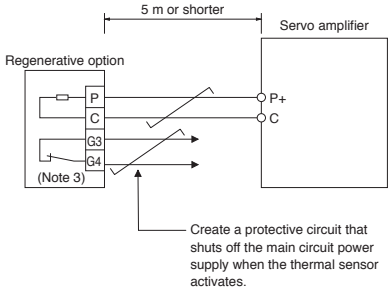

Notes: 1. To increase the regenerative braking frequency, install cooling fans (two units of 92 mm × 92 mm, minimum air flow: 1.0 m³/min), and then change [Pr. PA02]. The cooling fans must be prepared by users.
2. By installing a thermal sensor, create a safety circuit that shuts off the main circuit power supply when abnormal overheating occurs.
3. G3 and G4 terminals are thermal sensor. G3-G4 opens when the regenerative option overheats abnormally.

Multifunction Regeneration Converter (FR-XC, FR-XC-H) (Note 5)

G | G-HS | G-RJ | B | B-RJ | A | A-RJ

FR-XC multifunction regeneration converter is suitable for 200 V servo amplifiers ranged from 100 W to 25 kW and FR-XC-H for 400 V servo amplifiers ranged from 600 W to 25 kW. The multifunction regeneration converter is not compatible with multi-axis servo amplifiers and drive units.
Use the common bus regeneration mode with the harmonic suppression function disabled. The power regeneration mode and the harmonic suppression function are not supported.

200 V

Multifunction regeneration converter FR-XC-		7.5K	11K	15K	22K	30K	37K	55K
Capacity [kW]		7.5	11	15	22	30	37	55
Maximum number of connectable servo amplifiers		10						
Total capacity of connectable servo amplifiers (Note 1) [kW]		3.5 (5.5)	5.5 (7.5)	7.5 (11)	22	30	37	55
Continuous output (Note 1) [kW]		3.5 (5.5)	5.5 (7.5)	7.5 (11)	18.5	22	30	45
Rated input current [A]	Power driving	33	47	63	92	124	151	223
	Regenerative driving	26	37	51	74	102	125	186
Overload current rating		100 % continuous / 150 % 60 s						
Power source	Rated input AC voltage/frequency	3-phase 200 V AC to 240 V AC, 50 Hz/60 Hz						
	Permissible AC voltage fluctuation	3-phase 170 V AC to 264 V AC, 50 Hz/60 Hz						
	Permissible frequency fluctuation	±5 %						
	Power supply capacity [kVA]	17	20	28	41	52	66	100
IP rating (IEC 60529)		Open type (IP00)						
Cooling system		Forced air						
Environment	Ambient temperature	-10 °C to 50 °C (non-freezing)						
	Ambient humidity	90 %RH or less (non-condensing)						
	Storage temperature	-20 °C to 65 °C						
	Ambience	Indoors (without corrosive gas, flammable gas, oil mist, dust and dirt)						
	Altitude	2500 m or less (For the installation at an altitude above 1000 m, consider a 3 % reduction in the rated current per 500 m increase in altitude.)						
	Vibration resistance	5.9 m/s² at 10 Hz to 55 Hz (directions of X, Y, and Z axes)						
Molded-case circuit breaker or earth-leakage current breaker (Note 4)		100 AF 60 A (30 AF 30 A)	100 AF 75 A (50 AF 50 A)	225 AF 125 A (100 AF 75 A)	225 AF 175 A (100 AF 100 A)	225 AF 225 A (125 AF 125 A)	400 AF 250 A (125 AF 125 A)	400 AF 400 A (225 AF 175 A)
Magnetic contactor (Note 4)		S-T35 (S-T21)	S-T50 (S-T35)	S-T65 (S-T50)	S-T100 (S-T65)	S-N125 (S-T80)	S-N150 (S-T100)	S-N220 (S-N125)

400 V

Multifunction regeneration converter FR-XC-H		7.5K	11K	15K	22K	30K	37K	55K
Capacity [kW]		7.5	11	15	22	30	37	55
Maximum number of connectable servo amplifiers		10						
Total capacity of connectable servo amplifiers (Note 1) [kW]		3.5 (5.5)	5.5 (7.5)	7.5 (11)	22	30	37	55
Continuous output (Note 1) [kW]		3.5 (5.5)	5.5 (7.5)	7.5 (11)	18.5	22	30	45
Rated input current [A]	Power driving	18	25	34	49	65	80	118
	Regenerative driving	14	20	27	39	54	66	98
Overload current rating		100 % continuous / 150 % 60 s						
Power source	Rated input AC voltage/frequency (Note 2)	3-phase 380 to 500 V AC, 50 Hz/60 Hz						
	Permissible AC voltage fluctuation (Note 3)	3-phase 323 to 550 V AC, 50 Hz/60 Hz						
	Permissible frequency fluctuation	±5 %						
	Power supply capacity [kVA]	17	20	28	41	52	66	100
IP rating (IEC 60529)		Open type (IP00)						
Cooling system		Forced air						
Environment	Ambient temperature	-10 °C to 50 °C (non-freezing)						
	Ambient humidity	90 %RH or less (non-condensing)						
	Storage temperature	-20 °C to 65 °C						
	Ambience	Indoors (without corrosive gas, flammable gas, oil mist, dust and dirt)						
	Altitude	2500 m or less (For the installation at an altitude above 1000 m, consider a 3 % reduction in the rated current per 500 m increase in altitude.)						
	Vibration resistance	5.9 m/s² at 10 Hz to 55 Hz (directions of X, Y, and Z axes)						
Molded-case circuit breaker or earth-leakage current breaker (Note 4)		30 AF 30 A (30 AF 15 A)	50 AF 50 A (30 AF 20 A)	100 AF 60 A (30 AF 30 A)	100 AF 100 A (50 AF 50 A)	225 AF 125 A (60 AF 60 A)	225 AF 150 A (100 AF 75 A)	225 AF 200 A (100 AF 100 A)
Magnetic contactor (Note 4)		S-T21	S-T25 (S-T21)	S-T35 (S-T21)	S-T50 (S-T25)	S-T65 (S-T35)	S-T80 (S-T50)	S-N125 (S-T65)

Notes: 1. The values in brackets are applicable when the number of connected servo amplifiers is six or less.
2. When connecting to a servo amplifier, use with a voltage range of 380 V to 480 V.
3. When connecting to a servo amplifier, use with a voltage range of 323 V to 528 V.
4. The models in brackets are applicable when the capacity [kW] of FR-XC-(H) ≥ Total rated capacity [kW] of servo amplifiers connected to FR-XC-(H) × 2.
5. The following are specifications at the time of February 2025.
For selecting an FR-XC-(H) multifunction regeneration converter, refer to the latest "FR-XC Instruction Manual" and "MR-J5 User's Manual".

* Precautions when selecting the multifunction regeneration converter

Drive System Sizing Software Motorizer does not support combinations of servo amplifiers and a multifunction regeneration converter.
Select a multifunction regeneration converter which meets the following conditions.

1. Total rated capacity [kW] of servo amplifiers connected to FR-XC-(H) ≤ Capacity [kW] of FR-XC-(H)
2. Effective value [kW] of total output power of servo motors ≤ Continuous output [kW] of FR-XC-(H)
3. Maximum value [kW] of total output power of servo motors ≤ FR-XC-(H) capacity [kW] × 1.5

Multifunction Regeneration Converter (FR-XC, FR-XC-H) G G-HS G-RJ B B-RJ A A-RJ

Connection example

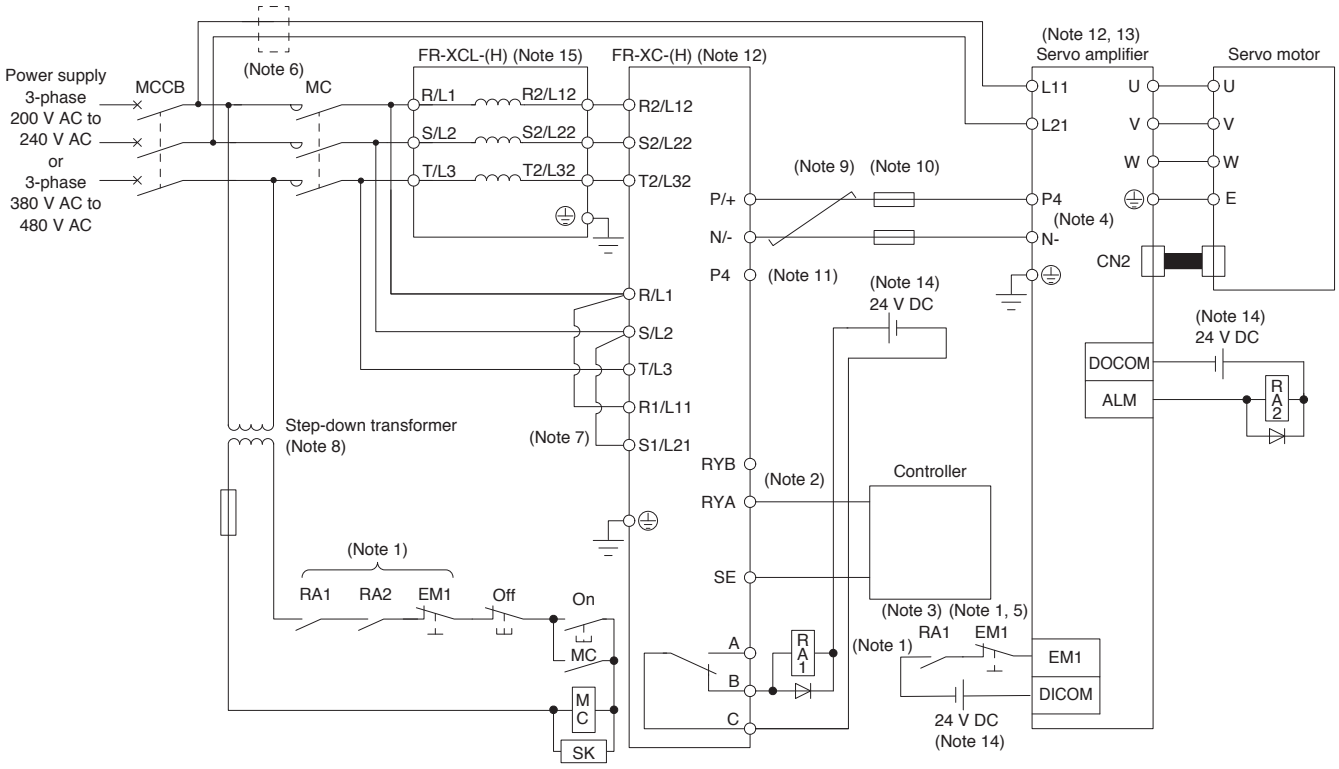

Notes:
1. Create a sequence that shuts off the main circuit power when either:
   An alarm occurs on FR-XC-(H) or the servo amplifier, or
   EM1 (Forced stop 1) is enabled.
2. For the servo amplifier, create a sequence that switches the servo-on after FR-XC-(H) is ready.
3. Create a sequence that stops the servo motor with the emergency stop input to the controller when an alarm occurs on FR-XC-(H). When the emergency stop input is not available in the controller, stop the servo motor with the forced stop input to the servo amplifier as shown in the diagram.
4. Disconnect the short-circuit bar between P3 and P4 when using FR-XC-(H).
5. Set [Pr. PA04.3] and [Pr. PA04.2] to "0" to enable EM1 (Forced stop 1).
6. When wires used for L11 and L21 are thinner than those for L1, L2, and L3, use a molded-case circuit breaker.
7. When using a separate power supply for the control circuit, remove the short-circuit bars between R/L1 and R1/L11, and S/L2 and S1/L21.
8. When FR-XC-H is used, a step-down transformer is required if coil voltage of the magnetic contactor is in 200 V.
9. Use twisted wires for connecting the DC power supply between FR-XC-(H) and the servo amplifiers, and keep the wire length to a maximum of 5 m (3 m for EMC compliance).
10. Install a fuse between each FR-XC-(H) and servo amplifier.
11. Do not connect anything to the P4 terminal of FR-XC-(H).
12. Inputs/outputs (main circuit) of FR-XC-(H) and the servo amplifier include high frequency components, and they may interfere with peripheral communication devices. In that case, the interference can be reduced with the installation of a radio noise filter (FR-BIF or FR-BIF-H) or line noise filter (FR-BSF01 or FR-BLF).
13. When using 7 kW or smaller servo amplifiers, do not disconnect the short-bar between P+ and D.
14. For convenience of illustration, the diagram shows separate 24 V DC power supplies for input and output signals. However, the input and output signals can share a common power supply.
15. When using FR-XC-(H), use the following dedicated stand-alone reactor (FR-XCL or FR-XCL-H). Do not use a power factor improving AC reactor (FR-HAL or FR-HAL-H) or a power factor improving DC reactor (FR-HEL or FR-HEL-H) with FR-XC-(H).

Multifunction regeneration converter	Dedicated stand-alone reactor
FR-XC-7.5K	FR-XCL-7.5K
FR-XC-11K	FR-XCL-11K
FR-XC-15K	FR-XCL-15K
FR-XC-22K	FR-XCL-22K
FR-XC-30K	FR-XCL-30K
FR-XC-37K	FR-XCL-37K
FR-XC-55K	FR-XCL-55K

Multifunction regeneration converter	Dedicated stand-alone reactor
FR-XC-H7.5K	FR-XCL-H7.5K
FR-XC-H11K	FR-XCL-H11K
FR-XC-H15K	FR-XCL-H15K
FR-XC-H22K	FR-XCL-H22K
FR-XC-H30K	FR-XCL-H30K
FR-XC-H37K	FR-XCL-H37K
FR-XC-H55K	FR-XCL-H55K

Dynamic Brake

G | G-HS | B | B-RJ | A | A-RJ

Use the following external dynamic brake (option) with the 12 kW or larger servo amplifiers.
Failure to do so will cause an accident because the servo motor does not stop immediately but coasts at an alarm occurrence for which the servo motor does not decelerate to stop. Ensure the safety in the entire equipment. The external dynamic brake cannot be used to comply with the SEMI-F47 standard. Do not assign DB (Dynamic brake interlock) to the output device. If DB (Dynamic brake interlock) is assigned, the servo amplifier switches to servo-off status when an instantaneous power failure occurs.

Servo amplifier model	Dynamic brake model	Fig.
MR-J5-12KG/B/A	DBU-11K	A
MR-J5-17KG/B/A	DBU-15K	
MR-J5-25KG/B/A	DBU-22K-R1	

Servo amplifier model	Dynamic brake model	Fig.
MR-J5-12KG4/B4/A4	DBU-11K-4	B
MR-J5-17KG4/B4/A4 MR-J5-25KG4/B4/A4	DBU-22K-4	

Dimensions

[Unit: mm]

A

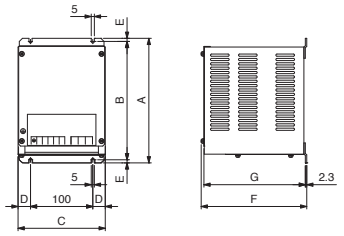

Terminal arrangement



Screw size: M3.5 Screw size: M4

Mounting screw size: M4

Model	A	B	C	D	E	F	G	Mass [kg]	Wire size [mm²] (Note 1)	
									U/V/W	Other than U/V/W
DBU-11K	200	190	140	20	5	170	163.5	2	5.5 (AWG 10)	2 (AWG 14)
DBU-15K DBU-22K-R1	250	238	150	25	6	235	228	6		

B

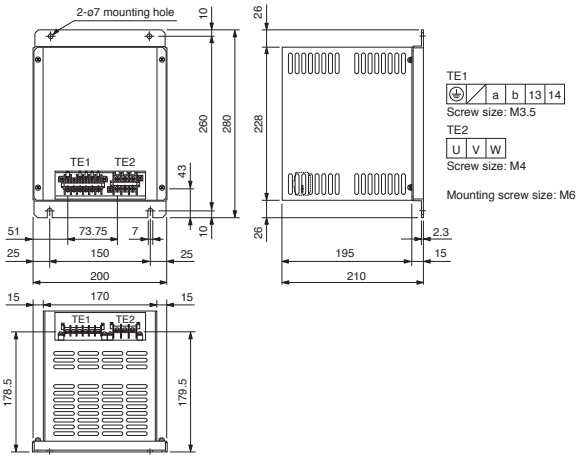

TE1

Screw size: M3.5

TE2

Screw size: M4

Mounting screw size: M6

Model	Mass [kg]	Wire size [mm²] (Note 1)	
		U/V/W	Other than U/V/W
DBU-11K-4	6.7	5.5 (AWG 10)	2 (AWG 14)
DBU-22K-4			

Notes: 1. The wire size is applicable when 600 V grade heat-resistant polyvinyl chloride insulated wire (HIV wires) is used.

Dimensions

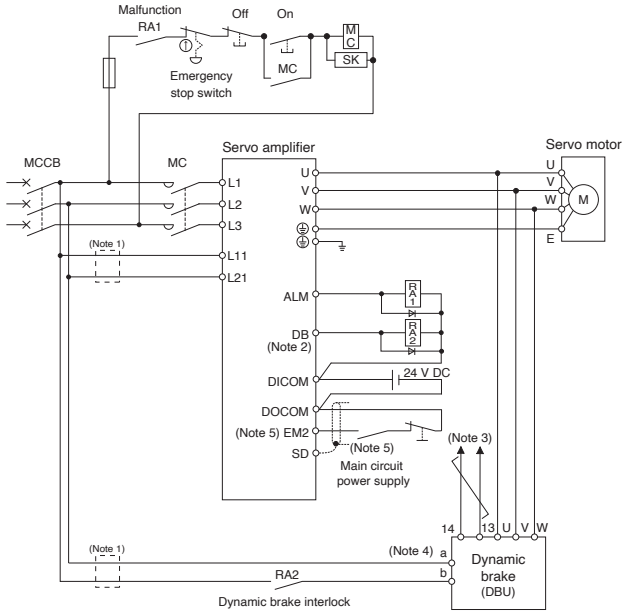

Notes: 1. Install an overcurrent protection device (molded-case circuit breaker, fuse, etc.) to protect the branch circuit.
2. Assign DB (Dynamic brake interlock) to any of the pins for the output device.
3. The terminals 13 and 14 are normally opened outputs. If the dynamic brake is welded, the terminals 13 and 14 will be opened. Thus, create an external sequence circuit so that SON (Servo-on) does not turn on when the terminals 13 and 14 are opened.
4. When using DBU-11K-4 or DBU-22K-4, the power supply voltage must be between 1-phase 380 V AC and 463 V AC, 50 Hz/60 Hz. Refer to "MR-J5 User's Manual" for details.
5. To prevent an unexpected restart of the servo amplifier, create a circuit to turn off EM2 (Forced stop 2) when the main circuit power is turned off.

Battery (MR-BAT6V1SET, MR-BAT6V1SET-A)

G G-RJ B B-RJ A A-RJ

Use the battery to configure an absolute position detection system with a direct drive motor. The absolute position data can be retained when the battery is mounted on the servo amplifier. The battery is not required for rotary servo motors and linear servo motors. When the battery life runs out, please replace the built-in MR-BAT6V1 battery. Refer to "MR-J5 User's Manual" for installation of the battery.

Servo amplifier	Motor side	Semi closed loop control system	Fully closed loop control system	
			Load side	
			Batteryless absolute position encoder	Linear encoder
MR-J5-G/A	Servo motor with battery-less absolute position encoder	Not required	Not required	Not required
	Direct drive motor	Required (Note 1)	Required (Note 2)	Required (Note 2)
	Linear servo motor	Not required	Not supported	Not supported
MR-J5-B	Servo motor with battery-less absolute position encoder	Not required	Not required	Not required
	Direct drive motor	Required (Note 1)	Not supported	Not supported
	Linear servo motor	Not required	Not supported	Not supported

Notes: 1. An absolute position storage unit (MR-BTAS01) is required.
2. An absolute position storage unit (MR-BTAS01) may be required depending on the parameter setting. Refer to "MR-J5 User's Manual" for details.

External appearance / Dimensions [Unit: mm]

MR-BAT6V1SET

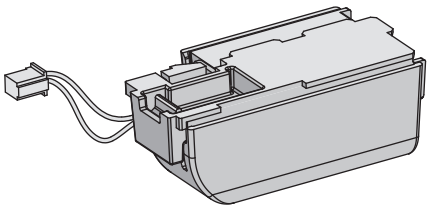

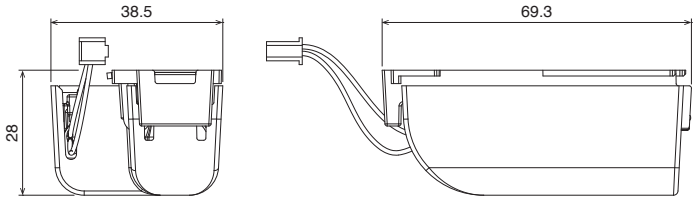

MR-BAT6V1SET-A

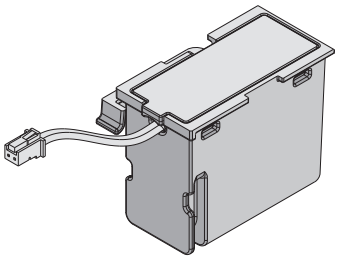

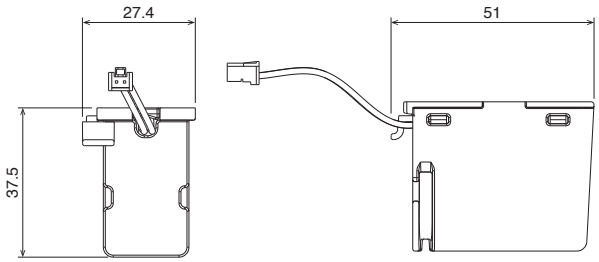

Model		MR-BAT6V1SET/MR-BAT6V1SET-A
Nominal voltage	[V]	6
Nominal capacity	[mAh]	1650
Lithium content	[g]	1.2
Primary battery		2CR17335A (CR17335A × 2 pcs. in series)
Mass	[g]	55 (including MR-BAT6V1 battery)

* MR-J3BAT battery cannot be used because of the difference in voltage.
* MR-BAT6V1 is an assembled battery composed of lithium metal batteries of CR17335A. This battery is not subject to the dangerous goods (Class 9) of the UN Recommendations.
To transport lithium metal batteries and lithium metal batteries contained in equipment, take actions to comply with the following regulations: the United Nations Recommendations on the Transport of Dangerous Goods, the Technical Instruction (ICAO-TI) by the International Civil Aviation Organization (ICAO), and the International Maritime Dangerous Goods Code (IMDG Code) by the International Maritime Organization (IMO). To transport the batteries, check the latest standards or the laws of the destination country and take actions. Contact your local sales office for more details.
* Please dispose of the battery according to your local laws and regulations.

Battery Case (MR-BT6VCASE) and Battery (MR-BAT6V1)

G | G-RJ | WG | B | B-RJ | WB | A | A-RJ

Absolute position data of up to four axes of direct drive motors can be retained when the battery case and the batteries are used. Direct drive motors used in incremental systems are also included in the number of the connectable axes. The synchronous encoders used for load side in the fully closed loop control system are also included in the number of the connectable axes. The linear servo motors are not included in the number of the connectable axes. The battery cases and batteries can be used in systems including 1-axis servo amplifiers and multi-axis servo amplifiers.
The case stores five batteries by connecting to the connectors. The batteries are not included in the battery case. Please purchase the batteries separately.

Dimensions (assembled) [Unit: mm]

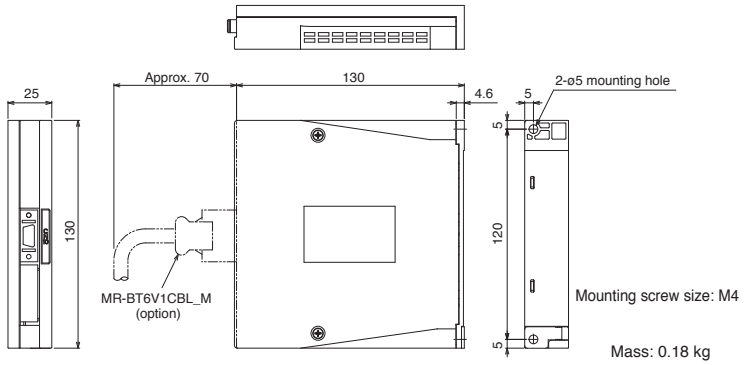

MR-BAT6V1

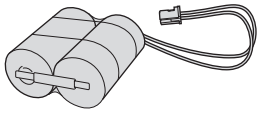

Model		MR-BAT6V1
Nominal voltage	[V]	6
Nominal capacity	[mAh]	1650
Lithium content	[g]	1.2
Primary battery		2CR17335A (CR17335A × 2 pcs. in series)
Mass	[g]	34

* MR-BAT6V1 is an assembled battery composed of lithium metal batteries of CR17335A. This battery is not subject to the dangerous goods (Class 9) of the UN Recommendations. To transport lithium metal batteries and lithium metal batteries contained in equipment, take actions to comply with the following regulations: the United Nations Recommendations on the Transport of Dangerous Goods, the Technical Instruction (ICAO-TI) by the International Civil Aviation Organization (ICAO), and the International Maritime Dangerous Goods Code (IMDG Code) by the International Maritime Organization (IMO). To transport the batteries, check the latest standards or the laws of the destination country and take actions. Contact your local sales office for more details.
* Please dispose of the battery according to your local laws and regulations.

Connections

One unit of servo amplifier

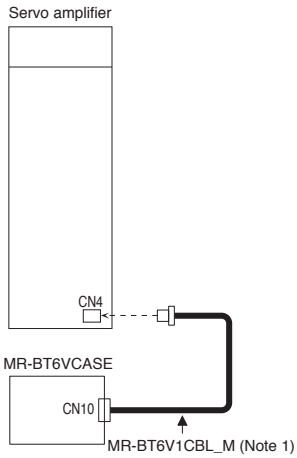

Up to four servo amplifier axes

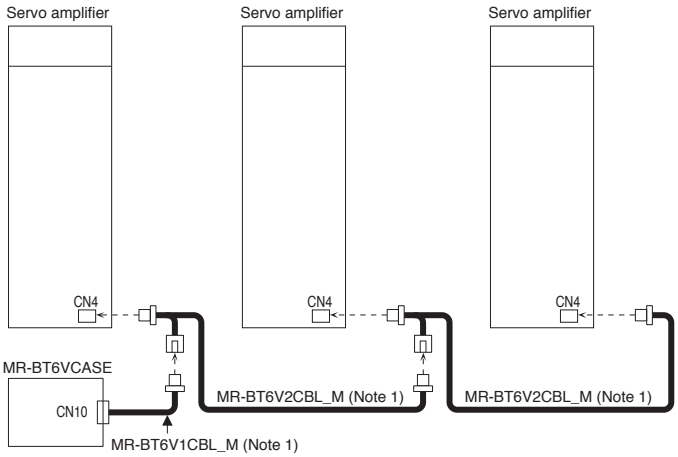

Notes: 1. This is an option cable. Refer to "Cables and Connectors for Servo Amplifiers" in this catalog.

Absolute Position Storage Unit (MR-BTAS01)

G | G-RJ | WG | B | B-RJ | WB | A | A-RJ

This absolute position storage unit is required for configuring an absolute position detection system using the direct drive motor. This unit is not required when the servo system is used in incremental system.

Dimensions [Unit: mm]

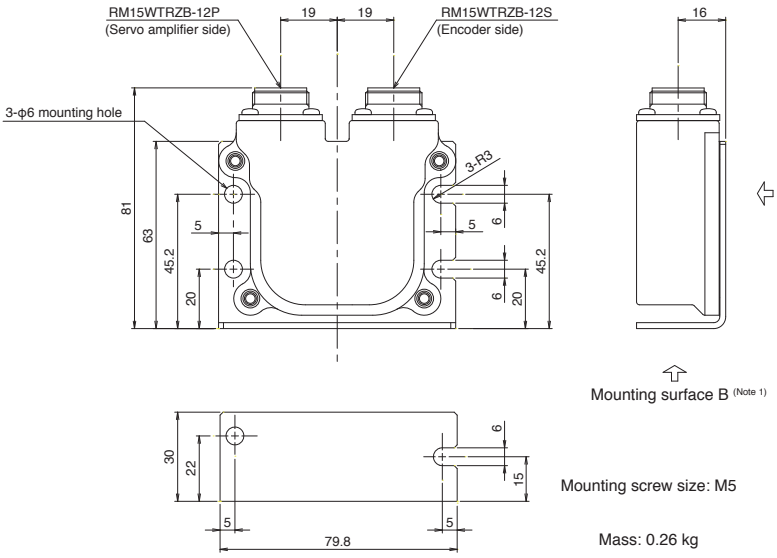

Item	Environment
Ambient temperature	Operation: 0 ˚C to 60 ˚C (non-freezing), Storage: -20 ˚C to 65 ˚C (non-freezing)
Ambient humidity	Operation: 10 %RH to 90 %RH (non-condensing), Storage: 10 %RH to 90 %RH (non-condensing)
Ambience	Indoors (no direct sunlight); no corrosive gas, inflammable gas, oil mist, dust or splash of oil or water
Altitude	2000 m or less
Vibration resistance	When the surface A is mounted: 49 m/s^2 (directions of X, Y, and Z axes) When the surface B is mounted: 5.9 m/s^2 (directions of X, Y, and Z axes)

Notes: 1. When mounting the absolute position storage unit outside a cabinet, mount the surface A with four screws. When mounting the unit inside a cabinet, mounting the surface B with two screws is also possible.

Replacement Fan Unit (MR-J5-FAN)

G | G-HS | G-RJ | WG | DG | B | B-RJ | WB | A | A-RJ

The cooling fan of the servo amplifier has a fan and a fan cover as a unit. Replace the fan unit when the fan needs to be replaced. Refer to "MR-J5 User's Manual" or "MR-J5D User's Manual" for replacement of the cooling fan.

Servo amplifier model	Replacement fan unit model
MR-J5-70G/B/A MR-J5-100G/B/A	MR-J5-FAN1
MR-J5-200G/B/A MR-J5-350G/B/A MR-J5-200G4/B4/A4 MR-J5-350G4/B4/A4	MR-J5-FAN6
MR-J5-500G/B/A	MR-J5-FAN3
MR-J5-700G/B/A	MR-J5-FAN4
MR-J5-500G4/B4/A4 MR-J5-700G4/B4/A4	MR-J5-FAN7
MR-J5-12KG/B/A MR-J5-17KG/B/A MR-J5-12KG4/B4/A4 MR-J5-17KG4/B4/A4	MR-J5-FAN8
MR-J5-25KG/B/A MR-J5-25KG4/B4/A4	MR-J5-FAN9 (2 units per set)
MR-J5W2-44G/B	MR-J5W-FAN1
MR-J5W2-77G/B MR-J5W2-1010G/B	MR-J5W-FAN3
MR-J5W3-222G/B MR-J5W3-444G/B	MR-J5W-FAN2
MR-J5D1-500G4 MR-J5D1-700G4 MR-J5D2-200G4 MR-J5D2-350G4 MR-J5D3-200G4	MR-J5D-FAN1
MR-J5D2-500G4 MR-J5D2-700G4	MR-J5D-FAN2

Cabinet-Mounting Attachment (J5-CHP07-10P)

G | G-RJ | WG | B | B-RJ | WB | A | A-RJ

The cabinet-mounting attachment is used when a servo amplifier is mounted on a cabinet with a screwdriver. A screw can be tightened horizontally at the upper side of the servo amplifier.

Compatible model: MR-J5-350G_/B_/A_ or smaller/MR-J5W_/MR-CM3K

External appearance/mounting	Dimensions [Unit: mm]
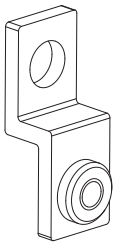 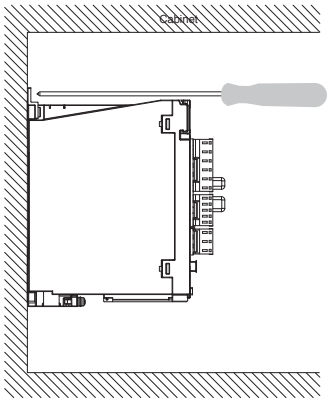 Components (1 pc.) Attachment Flat head screw (M4 × 10) Packing quantity: 10 pcs./packing	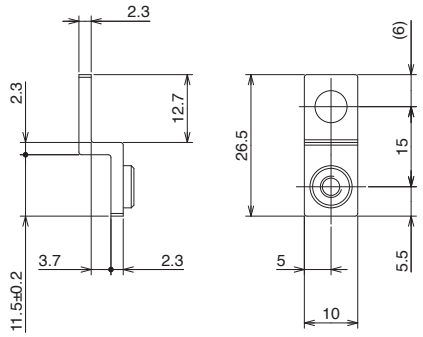

Grounding Terminal Attachment (J5-CHP08)

G | G-RJ | B | B-RJ | A | A-RJ

The grounding terminal attachment extends grounding terminals to the front side of the servo amplifier and clamps cables at the front side.

Compatible servo amplifier: MR-J5-350G_/B_/A_ or smaller

External appearance	Installation (Note 2) [Unit: mm]
With cable clamps 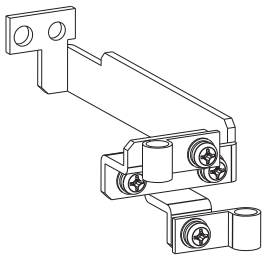 Components Attachment Cable clamp (Note 1) (ALC7 with a bundle diameter of ϕ6.5 mm to 7.5 mm manufactured by Takeuchi Industry Co., Ltd.) × 2 Screw (M4 × 12) × 4	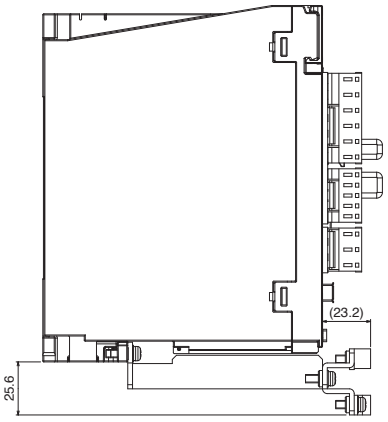

Notes: 1. For a bundle diameter other than that of the attachment, aluminum clamps in ALC series (manufactured by Takeuchi Industry Co., Ltd.) can be used. For details, please contact the relevant manufacturers directly.
2. When a battery (MR-BAT6V1SET or MR-BAT6V1SET-A) is used, the grounding terminal attachment cannot be used.

Shield Clamp Attachment (MR-ASCHP06)

G G-HS B B-RJ A A-RJ

The shield clamp attachment clamps the shield of a servo motor power cable on the bottom surface of the servo amplifier.

Compatible servo amplifier: MR-J5-500G4_/B4_/A4_/MR-J5-700G4_/B4_/A4_

External appearance

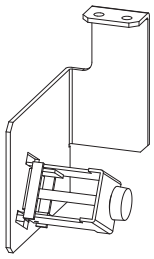

Components
Attachment
Cable clamp
Flat head screw (M4) × 2

Installation [Unit: mm]

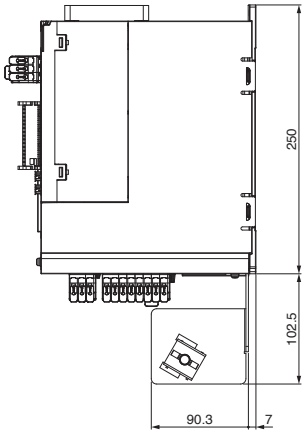

Panel Through Attachment (MR-J4ACN15K, MR-J3ACN)

G G-HS B B-RJ A A-RJ

By attaching a panel through attachment to the servo amplifier of 12 kW to 25 kW, the heat-generating part of the servo amplifier can be placed outside a cabinet. This allows the heat generated by the servo amplifier to be dissipated outside the cabinet, thereby reducing the amount of heat in the cabinet and making the cabinet more compact.

Servo amplifier model	Panel through attachment model	Fig.
MR-J5-12KG/B/A, MR-J5-12KG4/B4/A4 MR-J5-17KG/B/A, MR-J5-17KG4/B4/A4	MR-J4ACN15K	A
MR-J5-25KG/B/A, MR-J5-25KG4/B4/A4	MR-J3ACN	B

Mounting [Unit: mm]

A

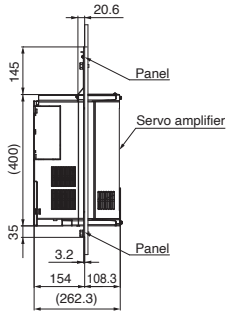

B

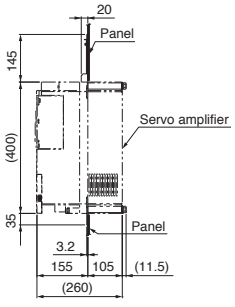

Panel cut dimensions [Unit: mm]

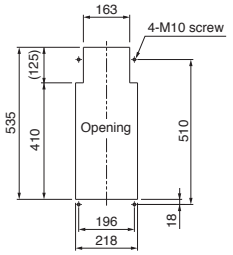

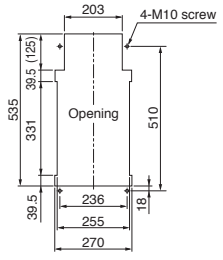

Mounting Attachment

DG

Power regeneration converter unit attachment (MR-ADCACN)

Attach a mounting attachment to a power regeneration converter unit.

Power regeneration converter unit model	Attachment model	Variable dimensions [mm]				Dimension with attachment [Unit: mm]
		D	Da	Db	Dc	
MR-CV11K4 MR-CV18K4	MR-ADCACN090	280	80	255.5	258.5	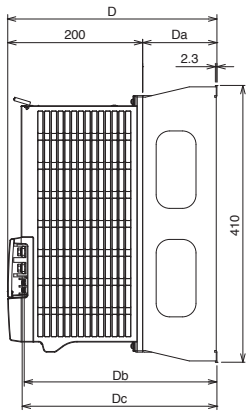
MR-CV30K4 MR-CV37K4 MR-CV45K4	MR-ADCACN150	310	110	285.5	288.5	
MR-CV55K4 MR-CV75K4	MR-ADCACN300					

Drive unit attachment (MR-ADACN)

Select a drive unit attachment that supports a power regeneration converter unit to be connected.

Power regeneration converter unit model / Drive unit model	MR-CV11K4 MR-CV18K4	MR-CV30K4 MR-CV37K4 MR-CV45K4 MR-CV55K4 MR-CV75K4	Dimension with attachment [Unit: mm]
MR-J5D1-700G4 or smaller, MR-J5D2-350G4 or smaller, MR-J5D3-200G4 or smaller	Attachment not required	MR-ADACN060	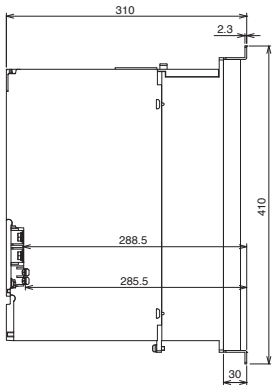
MR-J5D2-500G4 MR-J5D2-700G4	Attachment not required	MR-ADACN075	

Side Protection Cover (MR-J5DCASE01)

DG

By attaching a side protection cover to the outside of the final drive unit, the terminal block conforms to IP20.

External appearance	Installation (Note 1)
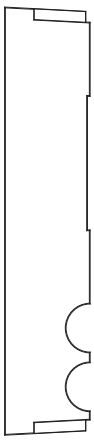	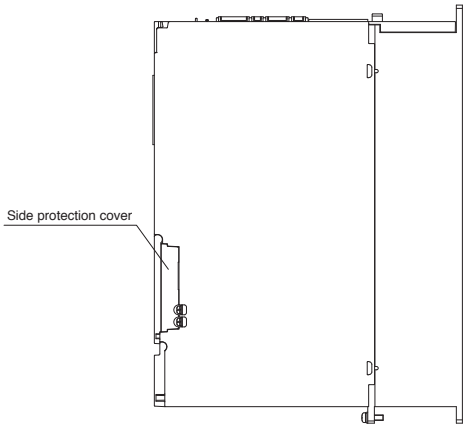

Notes: 1. Attaching the side protection cover does not change the dimensions of the drive unit.

[Products on the Market]

Junction Terminal Block (DG2SV3TB), Servo Amplifier Connection Cable (DG4SV2CB_)

G G-RJ B B-RJ

This terminal block is used for wiring signals.

Dimensions [Unit: mm]

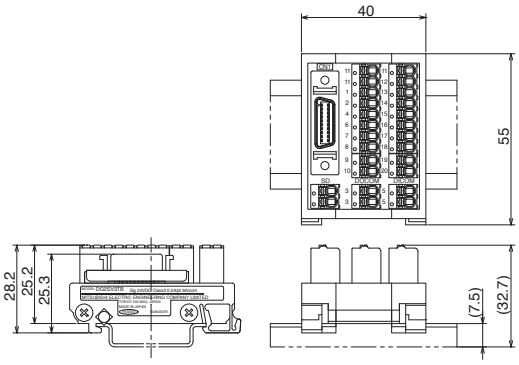

Mitsubishi Electric Engineering Co., Ltd. (Note 1)

Applicable wire: 1.5 mm² maximum
(Wire insulator OD: ø2.8 mm or smaller)

Notes: 1. For details, please contact the relevant manufacturers directly.

[Products on the Market]

Junction Terminal Block (PS7DW-20V14B-F)

G G-RJ B B-RJ

This terminal block is used for wiring signals.

Dimensions [Unit: mm]

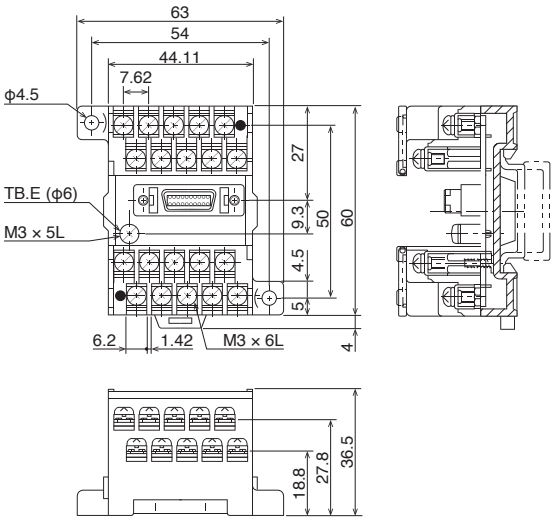

Toho Technology Corp. (Note 1),
Kyoto Factory

Applicable wire: 1.25 mm² maximum

Notes: 1. For details, please contact the relevant manufacturers directly.

Junction Terminal Block (MR-TB26A)

WG WB

This terminal block is used for wiring signals.

Dimensions (Note 1) [Unit: mm]

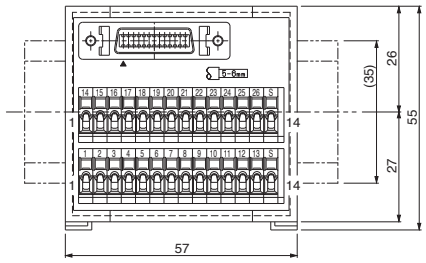

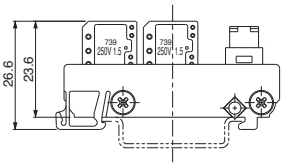

Specifications

Rating		32 V AC/DC, 0.5 A
Applicable wire (terminal side)	Stranded wire	0.08 mm² to 1.5 mm² (AWG 28 to 14)
	Solid wire	ø0.32 mm to 1.2 mm
	Wire insulator OD	3.4 mm or smaller
Operating tool		210-619 (WAGO) or an equivalent 210-119SB (WAGO) or an equivalent
Stripped length of wire		5 mm to 6 mm

Notes: 1. The lengths in brackets are applicable when the junction terminal block is mounted on a 35 mm wide DIN rail.

Junction Terminal Block (MR-TB50)

A A-RJ

This terminal block is used for wiring signals.

Dimensions [Unit: mm]

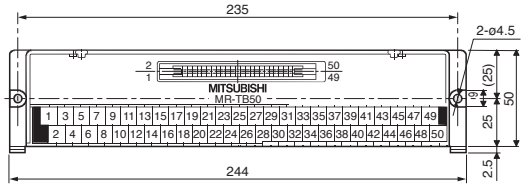

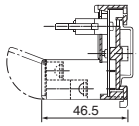

Terminal screw size: M3.5
Applicable wire: 2 mm² maximum
Crimp terminal width: 7.2 mm or shorter
Mounting screw size: M4

[Products on the Market]

Junction Terminal Block (DG2SV1TB), Servo Amplifier Connection Cable (DG4SV1CB_)

A A-RJ

This terminal block is used for wiring signals.

Dimensions [Unit: mm]

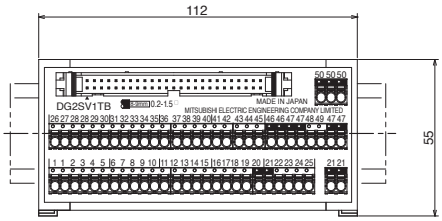

Mitsubishi Electric Engineering Co., Ltd. (Note 1)

Applicable wire: 1.5 mm² maximum (Wire insulator OD: ø2.8 mm or smaller)

Notes: 1. For details, please contact the relevant manufacturers directly.

Radio Noise Filter (FR-BIF, FR-BIF-H)

G | G-HS | G-RJ | WG | B | B-RJ | WB | A | A-RJ

This filter suppresses noise from the power supply side of the servo amplifier, especially effective for the radio frequency bands of 10 MHz or lower. The radio noise filter is designed to be installed on the input side.

Dimensions [Unit: mm]

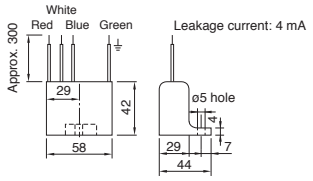

Connections

Do not use the radio noise filter on the output side of the servo amplifier.
Wiring should be as short as possible. Grounding is required.
Insulate the unused wire when using the radio noise filter with a 1-phase power supply.

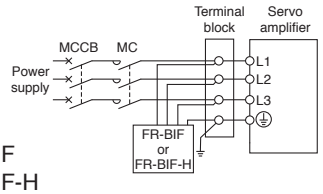

200 V: FR-BIF
400 V: FR-BIF-H

Line Noise Filter (FR-BSF01, FR-BLF)

G | G-HS | G-RJ | WG | B | B-RJ | WB | A | A-RJ

This filter is effective in suppressing noise emitted from the power supply side or the output side of the servo amplifier, and also in suppressing high-frequency leakage current (zero-phase current), especially within 0.5 MHz to 5 MHz band.

Dimensions [Unit: mm]

FR-BSF01
For wire size of 3.5 mm² (AWG 12) or smaller

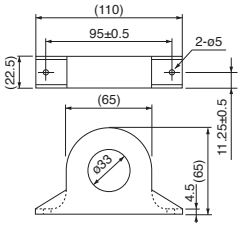

FR-BLF
For wire size of 5.5 mm² (AWG 10) or larger

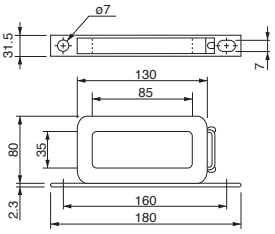

Connections

The line noise filters can be mounted on lines of the main circuit power supply (L1/L2/L3) and of the servo motor power (U/V/W). Pass each of the wires through the line noise filter an equal number of times in the same direction.
For wires of the main circuit power supply, the effect of the filter rises as the number of passes increases, but generally four passes would be appropriate. For the servo motor power lines, passes must be four times or less. Do not pass the grounding wire through the filter. Otherwise, the effect of the filter will drop.
Wind the wires by passing through the filter to satisfy the required number of passes as shown in Example 1. If the wires are too thick to wind, use two or more filters to have the required number of passes as shown in Example 2.
Place the line noise filters as close to the servo amplifier as possible for their best performance.

Example 1

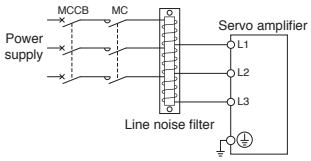

Example 2

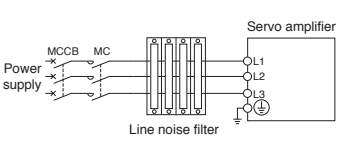

Data Line Filter

G | G-HS | G-RJ | WG | DG | B | B-RJ | WB | A | A-RJ

This filter is effective in preventing noise when attached to the pulse output cable of the pulse train output controller or the motor encoder cable.

Example) ESD-SR-250 (manufactured by TOKIN Corporation)
ZCAT3035-1330 (manufactured by TDK)
GRFC-13 (manufactured by Kitagawa Industries Co., Ltd.)
E04SRM563218 (manufactured by Seiwa Electric Mfg. Co., Ltd.)

Surge Killer

G | G-HS | G-RJ | WG | DG | B | B-RJ | WB | A | A-RJ

Attach surge killers to AC relays and AC valves around the servo amplifier. Attach diodes to DC relays and DC valves.

Example) Surge killer: CR-50500 (manufactured by Okaya Electric Industries Co., Ltd. (Note 1))
Diode: A diode with breakdown voltage four or more times greater than the relay drive voltage, and with current capacity two or more times greater than the relay drive current.

Notes: 1. For details, please contact the relevant manufacturers directly.

EMC Filter

For servo amplifiers

G G-HS G-RJ WG DG B B-RJ WB A A-RJ

The following filters are recommended as a filter compliant with the EMC directive for the power supply of the servo amplifier.
A surge protector is separately required to use the filters. Refer to "MR-J5 User's Manual" for details.
Fulfill the following requirements when connecting one or more units of servo amplifiers to one EMC filter.

- Rated voltage [V] of EMC filter ≥ Rated input voltage [V] of servo amplifier
- Rated current [A] of EMC filter ≥ Total rated input current [A] of servo amplifiers connected to EMC filter

Operating environment	Total length of servo motor power cables	EMC filter						
		Model	Rated current [A]	Rated voltage [V AC]	Operating temperature [°C]	Mass [kg]	Fig.	Manufacturer
IEC/EN 61800-3 Category C2/C3 (Note 1)	50 m or shorter	FSB-10-254-HU	10	250	-40 to 85	1.8	A	COSEL Co., Ltd.
		FSB-20-254-HU	20					
		FSB-30-254-HU	30					
		FSB-40-324-HU	40			3.3	B	
		FSB-100-324-HU	100			6.3	C	
		FSB-150-324-HU	150			8.8	D	
		FSB-10-355	10	500		1.8	A	
		FSB-20-355	20					
		FSB-30-355	30					
		FSB-40-355	40			3.3	B	
		FSB-60-355	60					
		FN3288-16-44-C35-R65 (Note 3)	16	530	-40 to 50	1.0	J	Schaffner EMC K.K.
		FN3288-40-33-C35-R65 (Note 3)	40			1.8		
		FN3288-63-53-C35-R65	63			2.7		
		FN3288-100-35-C35-R65	100			4.2		
		FN3288-125-35-C35-R65	125			4.6		
IEC/EN 61800-3 Category C3 (Note 1)	50 m or shorter	HF3010C-SZB	10	500	-20 to 50	0.9	E	Soshin Electric Co., Ltd. (Note 4)
		HF3020C-SZB	20			1.3		
		HF3030C-SZB	30					
		HF3040C-SZB	40			2.0	F	
	100 m or shorter	HF3030C-SZL	30			1.3	G	
	200 m or shorter	HF3060C-SZL	60			2.1		
	250 m or shorter	HF3100C-SZL	100			5.8	H	
		HF3150C-SZL	150			9.0	I	

Notes: 1. Category C2: Intended to be installed in either the first environment (residential environment) by a professional or in the second environment (commercial, light industrial, and industrial environments).
Category C3: Intended to be installed in the second environment (commercial, light industrial, and industrial environments).
2. For details, please contact the relevant manufacturers directly.
3. FN3288-16-44-C17-R65 and FN3288-40-33-C17-R65, which feature low leakage current from the EMC filter, can also be used for 200 V servo amplifiers.
4. For 12 kW or larger servo amplifiers, this manufacturer's EMC filters cannot be used.

EMC Filter

For power regeneration converter units

DG

The following filters are recommended as a filter compliant with the EMC directive for the power supply of the power regeneration converter unit.
A surge protector is separately required to use the filters. Refer to "MR-CV Power Regeneration Converter Unit User's Manual" for details.
Fulfill the following requirements when connecting one or more power regeneration converter units to one EMC filter.
• Rated voltage [V] of EMC filter ≥ Rated input voltage [V] of power regeneration converter unit
• Rated current [A] of EMC filter ≥ Total rated input current [A] of power regeneration converter units connected to EMC filter

Operating environment	EMC filter						
	Model	Rated current [A]	Rated voltage [V AC]	Operating temperature [°C]	Mass [kg]	Fig.	Manufacturer (Note 2)
IEC/EN 61800-3 Category C2, C3 (Note 1)	FSB-20-355	20	500	-40 to 85	1.8	A	COSEL Co., Ltd.
	FSB-30-355	30					
	FSB-40-355	40			3.3	B	
	FSB-80-355	80			6.3	C	
	FSB-100-355	100					
	FSB-150-355	150			8.8	D	
	FN3288-16-44-C35-R65	16	530	-40 to 50	1.0	J	Schaffner EMC K.K.
	FN3288-40-33-C35-R65	40			1.8		
	FN3288-63-53-C35-R65	63			2.7		
IEC/EN 61800-3 Category C3 (Note 1)	HF3030C-SZL	30	500	-20 to 50	1.3	G	Soshin Electric Co., Ltd.
	HF3060C-SZL	60			2.1		
	HF3100C-SZL	100			5.8	H	
	HF3150C-SZL	150			9.0	I	

Notes: 1. Category C2: Intended to be installed in either the first environment (residential environment) by a professional or in the second environment (commercial, light industrial, and industrial environments).
Category C3: Intended to be installed in the second environment (commercial, light industrial, and industrial environments).
2. For details, please contact the relevant manufacturers directly.

EMC Filter

G | G-HS | G-RJ | WG | DG | B | B-RJ | WB | A | A-RJ

Dimensions [Unit: mm]

A

FSB-10-254-HU/FSB-20-254-HU/FSB-30-254-HU/
FSB-10-355/FSB-20-355/FSB-30-355

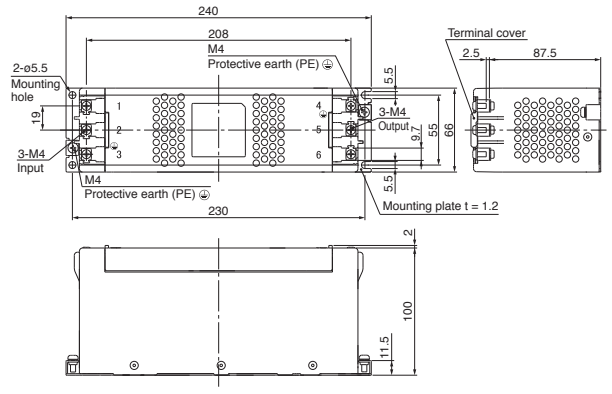

B

FSB-40-324-HU/FSB-40-355/FSB-60-355

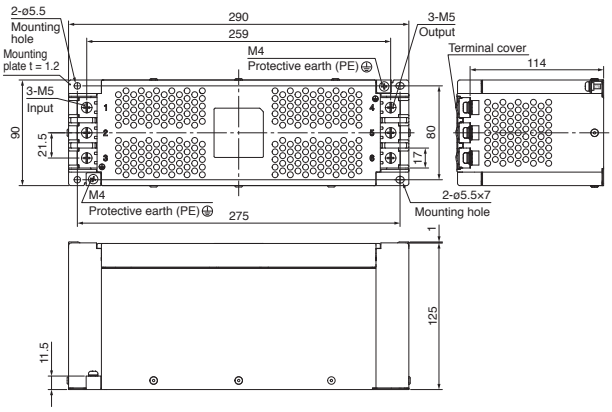

C

FSB-80-355/FSB-100-324-HU/FSB-100-355

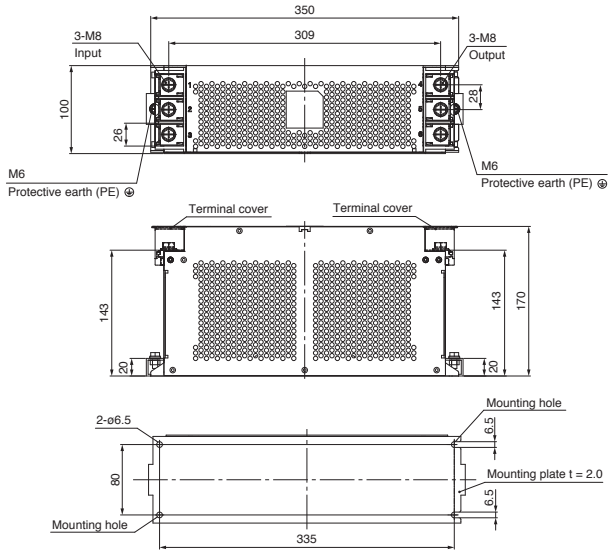

D

FSB-150-324-HU/FSB-150-355

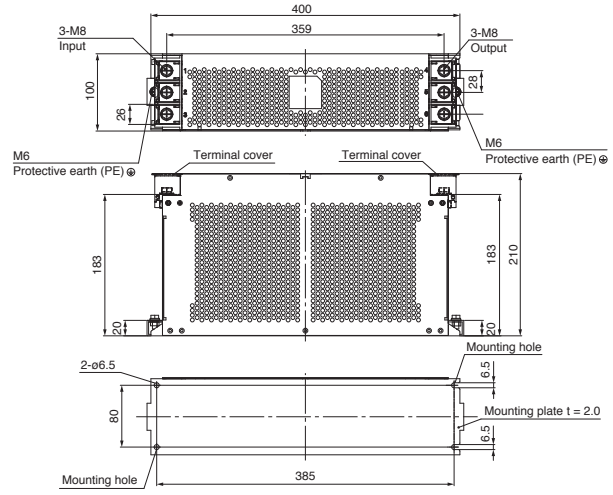

E

HF3010C-SZB/HF3020C-SZB/HF3030C-SZB

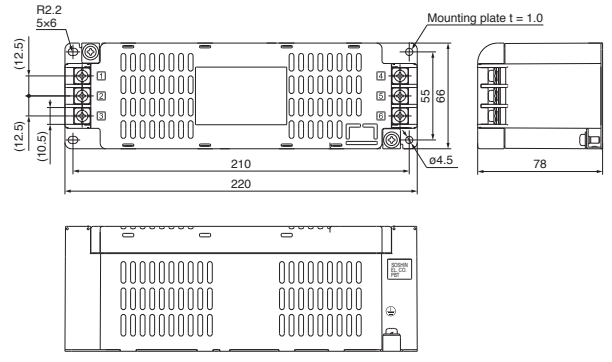

F

HF3040C-SZB

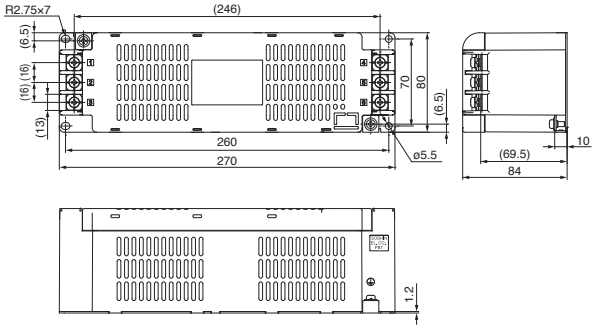

EMC Filter

G | G-HS | G-RJ | WG | DG | B | B-RJ | WB | A | A-RJ

Dimensions [Unit: mm]

G

HF3030C-SZL/HF3060C-SZL

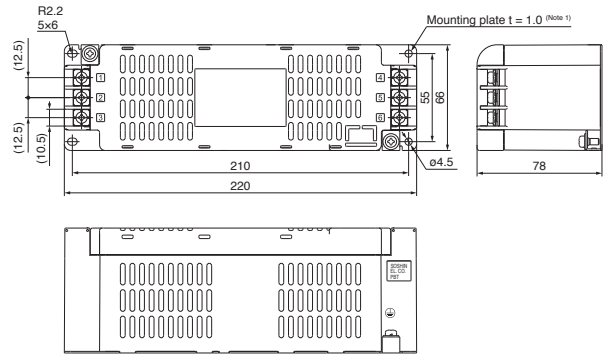

Notes: 1. This is for HF3030C-SZL. The thickness of the mounting plate of HF3060C-SZL is 1.2 mm.

H

HF3100C-SZL

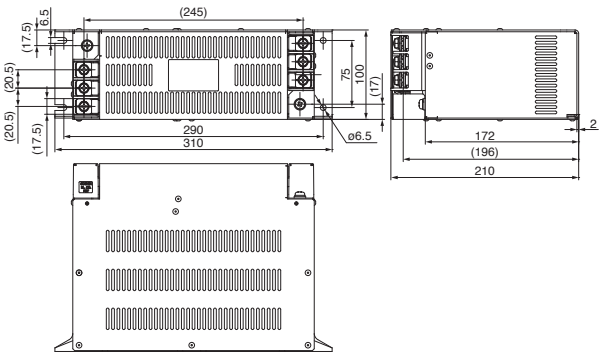

I

HF3150C-SZL

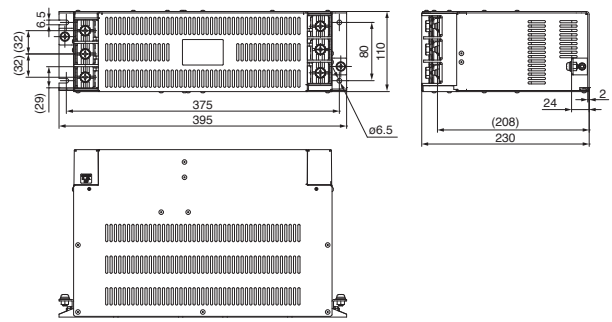

J

FN3288-16-44-C35-R65/FN3288-40-33-C35-R65/FN3288-63-53-C35-R65
FN3288-100-35-C35-R65/FN3288-125-35-C35-R65

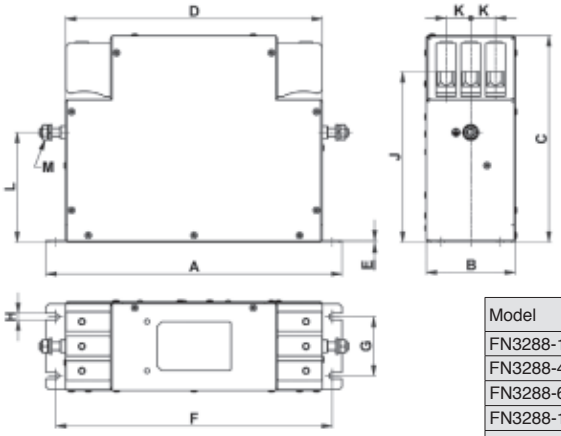

Model	A	B	C	D	E	F	G	H	J	K	L	M
FN3288-16-44-C35-R65	195	45	140	164	0.8	180	25	5.4	122	11	93	M5
FN3288-40-33-C35-R65	235	50	168	207	1.0	220	30	5.4	149	13	115	M6
FN3288-63-53-C35-R65												
FN3288-100-35-C35-R65	300	90	210	260	1.5	280	60	6.5	173	25	112	M8
FN3288-125-35-C35-R65												

EMC Filter

G G-HS G-RJ WG DG B B-RJ WB A A-RJ

Connections

3-phase 200 V/400 V AC

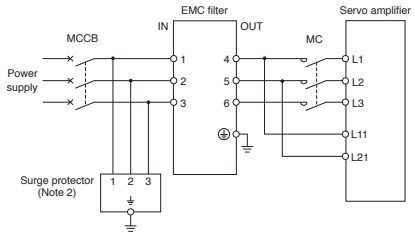

3-phase 200 V AC

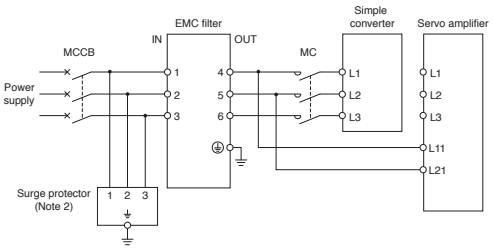

1-phase 200 V AC

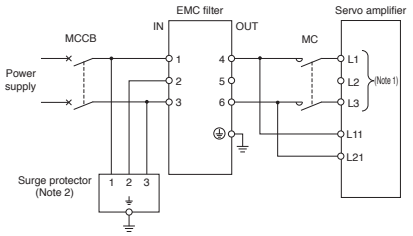

For MR-CV and MR-J5D_-_G4

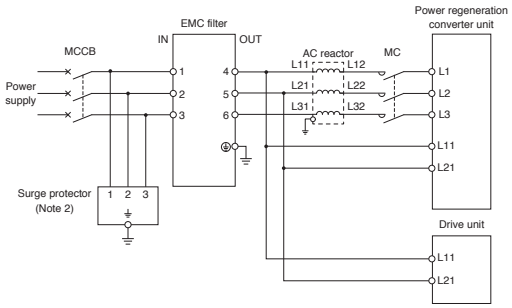

Notes: 1. Connect the power supply to L1 and L3 terminals. Do not connect anything to L2.
2. This is for when a surge protector is connected.

Surge Protector

G G-HS G-RJ WG DG B B-RJ WB A A-RJ

Attach surge protectors of RSPD series (manufactured by Okaya Electric Industries Co., Ltd. (Note 1)) or LT-CS-WS series (manufactured by Soshin Electric Co., Ltd. (Note 1)) to the servo amplifiers.

Notes: 1. For details, please contact the relevant manufacturers directly.

Power Factor Improving DC Reactor (FR-HEL, FR-HEL-H)

G | G-HS | G-RJ | B | B-RJ | A | A-RJ

This boosts the power factor of servo amplifier and reduces the power supply capacity.
Use either the DC reactor or the AC reactor.
As compared to the AC reactor (FR-HAL, FR-HAL-H), the DC reactor (FR-HEL, FR-HEL-H) is more recommended since the DC reactor is more effective in power factor improvement, smaller and lighter, and its wiring is easier. (The DC reactor uses two wires, while the AC reactor uses six wires.)

Servo amplifier model	Power factor improving DC reactor model	Fig.
MR-J5-10G/B/A	FR-HEL-0.4K	A
MR-J5-20G/B/A		
MR-J5-40G/B/A	FR-HEL-0.75K	
MR-J5-60G/B/A	FR-HEL-1.5K	
MR-J5-70G/B/A		
MR-J5-100G/B/A	FR-HEL-2.2K	
MR-J5-200G/B/A	FR-HEL-3.7K	B
MR-J5-350G/B/A	FR-HEL-7.5K	C
MR-J5-500G/B/A	FR-HEL-11K	D
MR-J5-700G/B/A	FR-HEL-15K	
MR-J5-12KG/B/A		
MR-J5-17KG/B/A	FR-HEL-22K	E
MR-J5-25KG/B/A	FR-HEL-30K	

Servo amplifier model	Power factor improving DC reactor model	Fig.
MR-J5-60G4/B4/A4	FR-HEL-H1.5K	F
MR-J5-100G4/B4/A4	FR-HEL-H2.2K	
MR-J5-200G4/B4/A4	FR-HEL-H3.7K	G
MR-J5-350G4/B4/A4	FR-HEL-H7.5K	
MR-J5-500G4/B4/A4	FR-HEL-H11K	H
MR-J5-700G4/B4/A4	FR-HEL-H15K	I
MR-J5-12KG4/B4/A4		
MR-J5-17KG4/B4/A4	FR-HEL-H22K	
MR-J5-25KG4/B4/A4	FR-HEL-H30K	

Connections

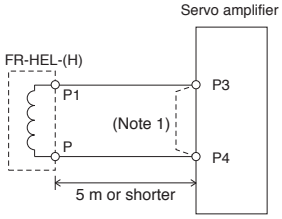

Notes: 1. Disconnect a short-circuit bar between P3 and P4 when using the power factor improving DC reactor.

Dimensions

A

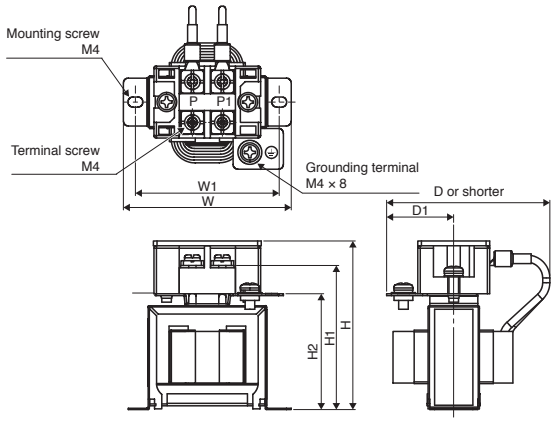

Model	Variable dimensions [mm]							Mass [kg]	Wire size [mm²] (Note 2)
	D (Note 1)	D1	W	W1	H	H1	H2		
FR-HEL-0.4K	61	28	70	60	71	61	48	0.4	2 (AWG 14)
FR-HEL-0.75K	61	28	85	74	81	71	59	0.5	
FR-HEL-1.5K	70	33	85	74	81	71	59	0.8	
FR-HEL-2.2K	70	33	85	74	81	71	59	0.9	

Notes: 1. This indicates the maximum dimension. The dimension varies depending on the bending degree of the input/output lines.
2. The wire size is applicable when 600 V grade heat-resistant polyvinyl chloride insulated wires (HIV wires) are used.

Power Factor Improving DC Reactor (FR-HEL, FR-HEL-H)

G | G-RJ | B | B-RJ | A | A-RJ

Dimensions

B

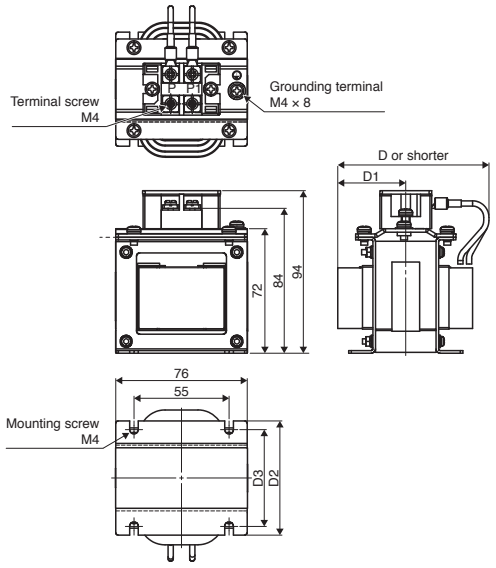

Model	Variable dimensions [mm]				Mass [kg]	Wire size [mm²] (Note 2)
	D (Note 1)	D1	D2	D3		
FR-HEL-3.7K	82	39	66	56	1.4	2 (AWG 14)

C

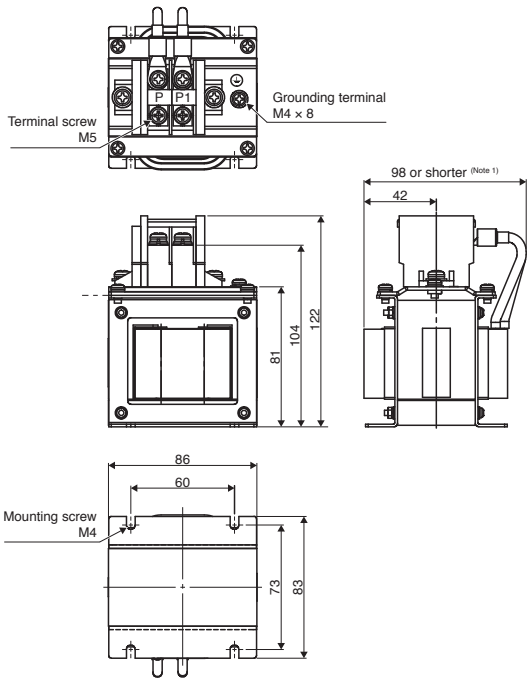

Model	Mass [kg]	Wire size [mm²] (Note 2)
FR-HEL-7.5K	2.5	3.5 (AWG 12)

Notes: 1. This indicates the maximum dimension. The dimension varies depending on the bending degree of the input/output lines.
2. The wire size is applicable when 600 V grade heat-resistant polyvinyl chloride insulated wires (HIV wires) are used.

Power Factor Improving DC Reactor (FR-HEL, FR-HEL-H)

G | G-HS | G-RJ | B | B-RJ | A | A-RJ

Dimensions

D

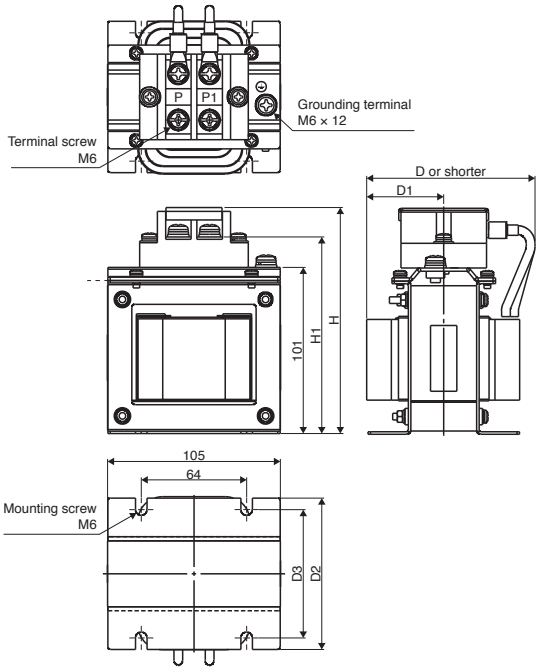

Model	Variable dimensions [mm]						Mass [kg]	Wire size [mm²] (Note 2)
	D (Note 1)	D1	D2	D3	H	H1		
FR-HEL-11K	112	47	92	78	138	118	3.1	5.5 (AWG 10)
FR-HEL-15K	115	49	97	83	142	120	3.8	8 (AWG 8) 14 (AWG 6) (Note 3)

E

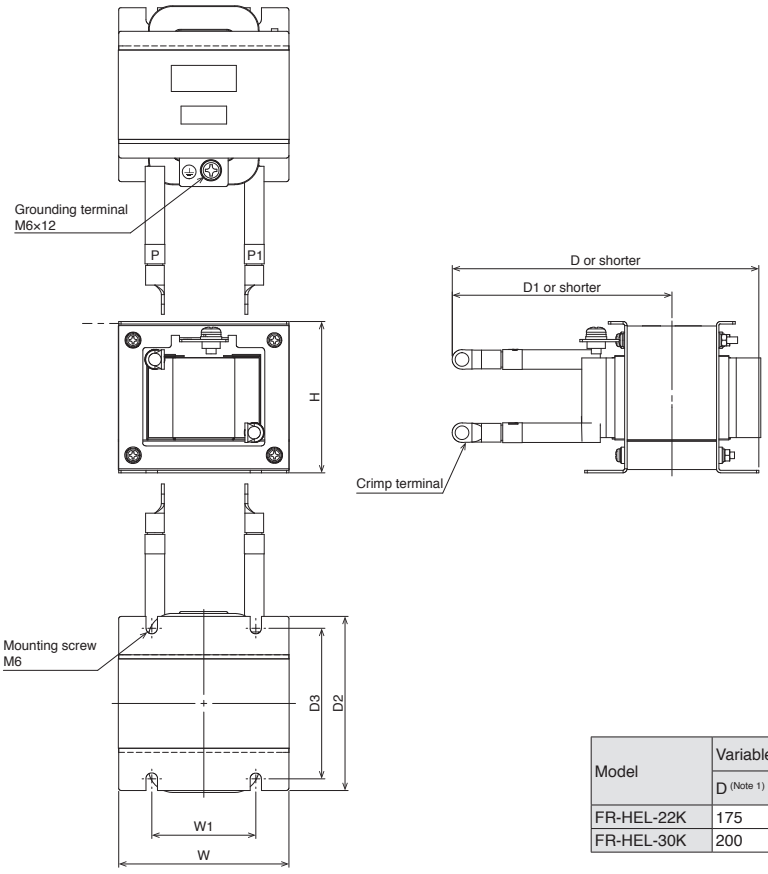

Model	Variable dimensions [mm]							Mass [kg]	Wire size [mm²] (Note 2)
	D (Note 1)	D1	D2	D3	W	W1	H		
FR-HEL-22K	175	115	117	103	105	64	93	4.8	22 (AWG 4)
FR-HEL-30K	200	135	125	100	114	72	100	6.7	38 (AWG 2)

Notes: 1. This indicates the maximum dimension. The dimension varies depending on the bending degree of the input/output lines.
2. The wire size is applicable when 600 V grade heat-resistant polyvinyl chloride insulated wires (HIV wires) are used.
3. When using FR-HEL-15K, select a wire of 8 mm² (AWG 8) for MR-J5-700G/B/A, and 14 mm² (AWG 6) for MR-J5-12KG/B/A.

Power Factor Improving DC Reactor (FR-HEL, FR-HEL-H)

G | G-HS | G-RJ | B | B-RJ | A | A-RJ

Dimensions

F

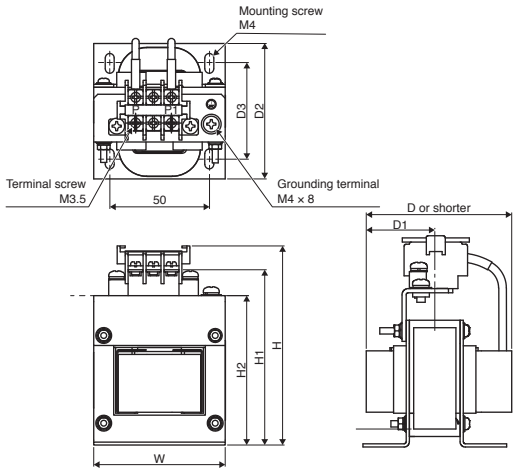

Model	Variable dimensions [mm]								Mass [kg]	Wire size [mm²] (Note 2)
	D (Note 1)	D1	D2	D3	W	H	H1	H2		
FR-HEL-H1.5K	80	36	74	54	66	100	87	75	1.0	2 (AWG 14)
FR-HEL-H2.2K	80	38	74	54	76	110	97	85	1.3	

G

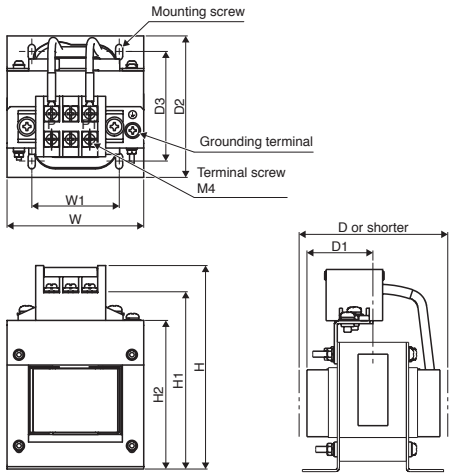

Model	Variable dimensions [mm]									Mounting screw	Grounding terminal	Mass [kg]	Wire size [mm²] (Note 2)
	D (Note 1)	D1	D2	D3	W	W1	H	H1	H2				
FR-HEL-H3.7K	95	39	89	69	86	55	128	114	94	M4	M4 × 8	2.3	2 (AWG 14)
FR-HEL-H7.5K	105	47	100	80	96	60	136	122	102	M5	M5 × 10	3.5	

Notes: 1. This indicates the maximum dimension. The dimension varies depending on the bending degree of the input/output lines.
2. The wire size is applicable when 600 V grade heat-resistant polyvinyl chloride insulated wires (HIV wires) are used.

Power Factor Improving DC Reactor (FR-HEL, FR-HEL-H)

G | G-HS | G-RJ | B | B-RJ | A | A-RJ

Dimensions

H

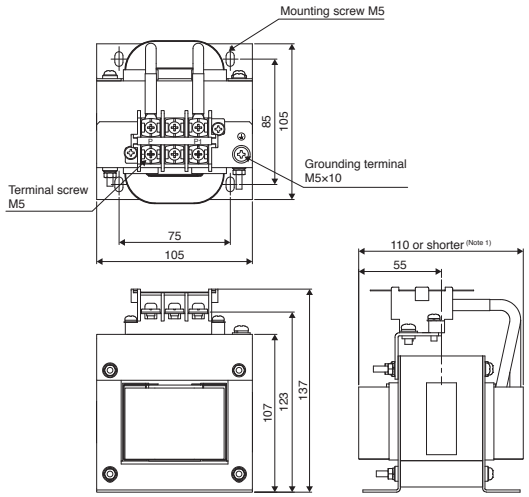

Model	Mass [kg]	Wire size [mm²] (Note 2)
FR-HEL-H11K	4.5	3.5 (AWG 12)

I

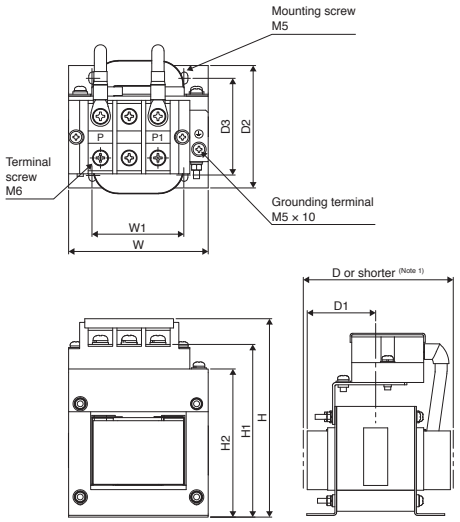

Model	Variable dimensions [mm]									Mass [kg]	Wire size [mm²] (Note 2)
	D (Note 1)	D1	D2	D3	W	W1	H	H1	H2		
FR-HEL-H15K	125	57	115	95	105	75	152	130	111	5.0	5.5 (AWG 10) 8 (AWG 8) (Note 3)
FR-HEL-H22K	120	55	95	75	133	90	180	157	137	6.0	8 (AWG 8)
FR-HEL-H30K	120	58	100	80	133	90	180	157	137	6.5	14 (AWG 6)

Notes: 1. This indicates the maximum dimension. The dimension varies depending on the bending degree of the input/output lines.
2. The wire size is applicable when 600 V grade heat-resistant polyvinyl chloride insulated wire (HIV wires) is used.
3. When using FR-HEL-H15K, select a wire of 5.5 mm² (AWG 10) for MR-J5-700G4/B4/A4, and 8 mm² (AWG 8) for MR-J5-12KG4/B4/A4.

Power Factor Improving AC Reactor (FR-HAL, FR-HAL-H)

G | G-HS | G-RJ | WG | B | B-RJ | WB | A | A-RJ

This boosts the power factor of servo amplifier and reduces the power supply capacity.

MR-J5-G/B/A, MR-CM3K

Servo amplifier/ simple converter model	Power factor improving AC reactor model (Note 2)	Fig.
MR-J5-10G/B/A	FR-HAL-0.4K	A
MR-J5-20G/B/A		
MR-J5-40G/B/A	FR-HAL-0.75K	
MR-J5-60G/B/A	FR-HAL-1.5K	
MR-J5-70G/B/A		
MR-J5-100G/B/A (3-phase power input)	FR-HAL-2.2K	B
MR-J5-100G/B/A (1-phase power input)	FR-HAL-3.7K	
MR-J5-200G/B/A (3-phase power input)		
MR-J5-200G/B/A (1-phase power input)	FR-HAL-5.5K	
MR-J5-350G/B/A MR-CM3K	FR-HAL-7.5K	C
MR-J5-500G/B/A	FR-HAL-11K	
MR-J5-700G/B/A	FR-HAL-15K	
MR-J5-12KG/B/A		
MR-J5-17KG/B/A	FR-HAL-22K	D
MR-J5-25KG/B/A	FR-HAL-30K	
MR-J5-60G4/B4/A4	FR-HAL-H1.5K	E
MR-J5-100G4/B4/A4	FR-HAL-H2.2K	
MR-J5-200G4/B4/A4	FR-HAL-H3.7K	
MR-J5-350G4/B4/A4	FR-HAL-H7.5K	F
MR-J5-500G4/B4/A4	FR-HAL-H11K	G
MR-J5-700G4/B4/A4	FR-HAL-H15K	
MR-J5-12KG4/B4/A4		
MR-J5-17KG4/B4/A4	FR-HAL-H22K	H
MR-J5-25KG4/B4/A4	FR-HAL-H30K	

MR-J5W2-G/B (Note 1)

Total output of rotary servo motors	Total continuous thrust of linear servo motors	Total output of direct drive motors	Power factor improving AC reactor model (Note 2)	Fig.
450 W or less	150 N or less	100 W or less	FR-HAL-0.75K	A
Over 450 W to 600 W	Over 150 N to 240 N	Over 100 W to 377 W	FR-HAL-1.5K	
Over 600 W to 1 kW	Over 240 N to 300 N	Over 377 W to 545 W	FR-HAL-2.2K	B
Over 1 kW to 2 kW	Over 300 N to 720 N	Over 545 W to 838 W	FR-HAL-3.7K	

MR-J5W3-G/B (Note 1)

Total output of rotary servo motors	Total continuous thrust of linear servo motors	Total output of direct drive motors	Power factor improving AC reactor model (Note 2)	Fig.
450 W or less	150 N or less	-	FR-HAL-0.75K	A
Over 450 W to 600 W	Over 150 N to 240 N	378 W or less	FR-HAL-1.5K	
Over 600 W to 1 kW	Over 240 N to 300 N	-	FR-HAL-2.2K	B
Over 1 kW to 2 kW	Over 300 N to 450 N	-	FR-HAL-3.7K	

Notes: 1. Refer to "MR-J5 User's Manual" for selecting a power factor improving AC reactor when combining multiple servo motors among the rotary servo motor, the linear servo motor or the direct drive motor.
2. When using the power factor improving AC reactor, install one reactor for each servo amplifier.

Connections

3-phase 200 V AC
3-phase 400 V AC

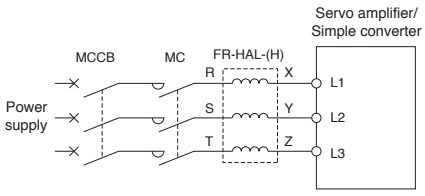

1-phase 200 V AC

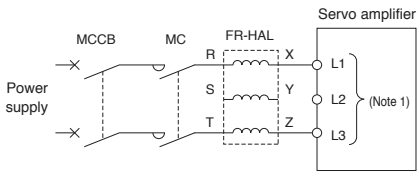

Notes: 1. Connect the power supply to L1 and L3 terminals. Do not connect anything to L2.

Power Factor Improving AC Reactor (FR-HAL, FR-HAL-H)

G | G-HS | G-RJ | WG | B | B-RJ | WB | A | A-RJ

Dimensions

A

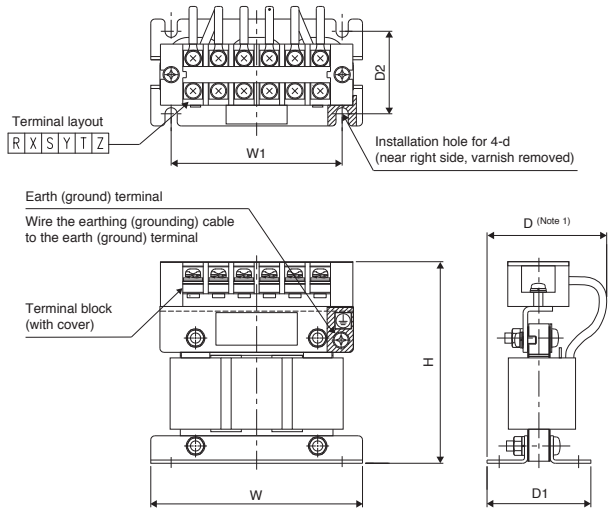

Model	Variable dimensions [mm]							Mass [kg]	Terminal size
	W	W1	H	D (Note 1)	D1	D2	d		
FR-HAL-0.4K	104	84	99	72	51	40	M5	0.6	M4
FR-HAL-0.75K	104	84	99	74	56	44	M5	0.8	M4
FR-HAL-1.5K	104	84	99	77	61	50	M5	1.1	M4

B

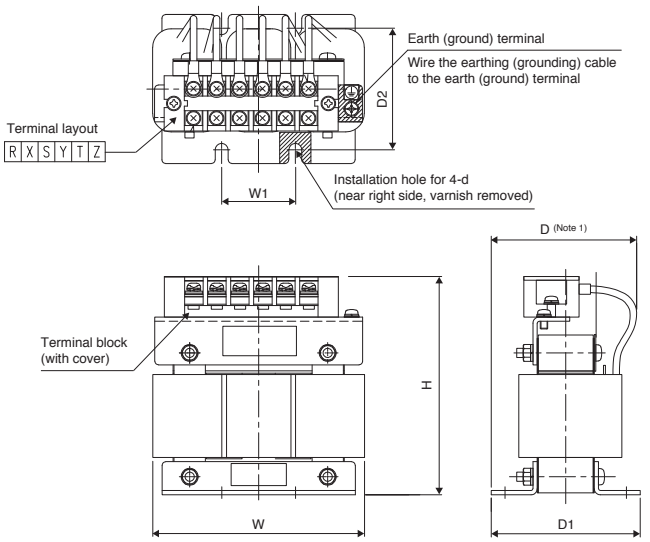

Model	Variable dimensions [mm]							Mass [kg]	Terminal size
	W	W1	H	D (Note 1)	D1	D2	d		
FR-HAL-2.2K	115	40	115	77	71	57	M6	1.5	M4
FR-HAL-3.7K	115	40	115	83	81	67	M6	2.2	M4
FR-HAL-5.5K	115	40	115	83	81	67	M6	2.3	M4

C

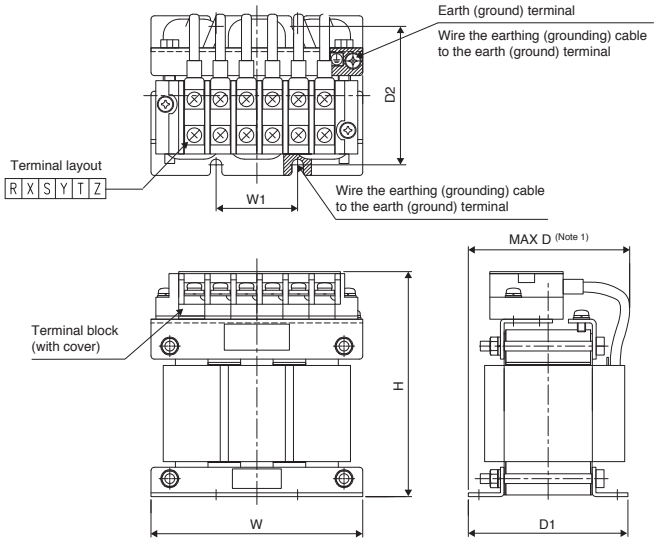

Model	Variable dimensions [mm]							Mass [kg]	Terminal size
	W	W1	H	D (Note 1)	D1	D2	d		
FR-HAL-7.5K	130	50	135	100	98	86	M6	4.2	M5
FR-HAL-11K	160	75	164	111	109	92	M6	5.2	M6
FR-HAL-15K	160	75	167	126	124	107	M6	7.0	M6

Notes: 1. This indicates the maximum dimension. The dimension varies depending on the bending degree of the input/output lines.

Power Factor Improving AC Reactor (FR-HAL, FR-HAL-H)

G | G-HS | G-RJ | WG | B | B-RJ | WB | A | A-RJ

Dimensions

D

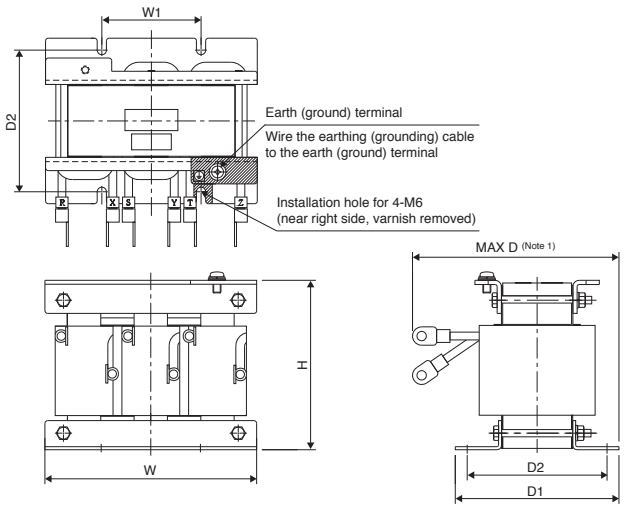

Model	Variable dimensions [mm]						Mass [kg]	Terminal size
	W	W1	H	D (Note 1)	D1	D2		
FR-HAL-22K	185	75	150	158	100	87	9.0	M8
FR-HAL-30K	185	75	150	168	100	87	9.7	M10

E

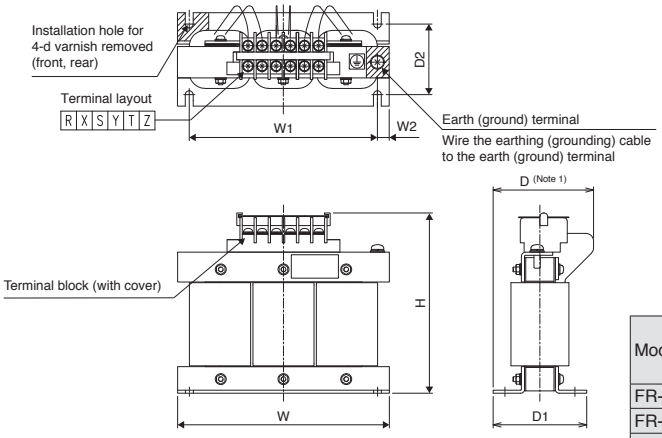

Model	Variable dimensions [mm]								Mass [kg]	Terminal size
	W	W1	W2	H	D (Note 1)	D1	D2	d		
FR-HAL-H1.5K	135	120	8	115	59	59.6	45	M4	1.5	M3.5
FR-HAL-H2.2K	135	120	8	115	59	59.6	45	M4	1.5	M3.5
FR-HAL-H3.7K	135	120	8	115	69	70.6	57	M4	2.5	M3.5

F

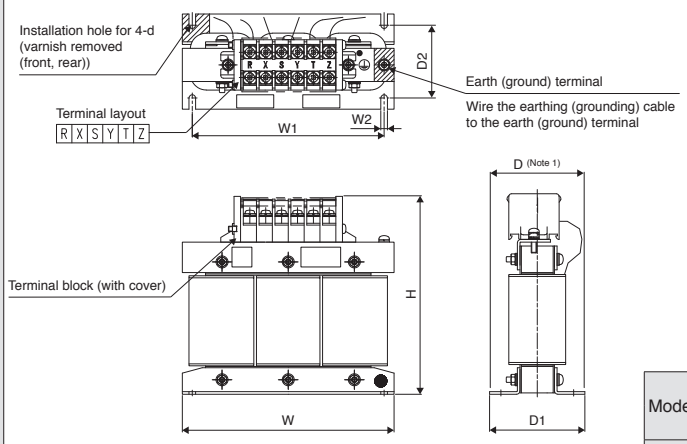

Model	Variable dimensions [mm]								Mass [kg]	Terminal size
	W	W1	W2	H	D (Note 1)	D1	D2	d		
FR-HAL-H7.5K	160	145	8	150	91	91	75	M4	5.0	M4

Notes: 1. This indicates the maximum dimension. The dimension varies depending on the bending degree of the input/output lines.

Power Factor Improving AC Reactor (FR-HAL, FR-HAL-H)

G | G-HS | G-RJ | WG | B | B-RJ | WB | A | A-RJ

Dimensions

G

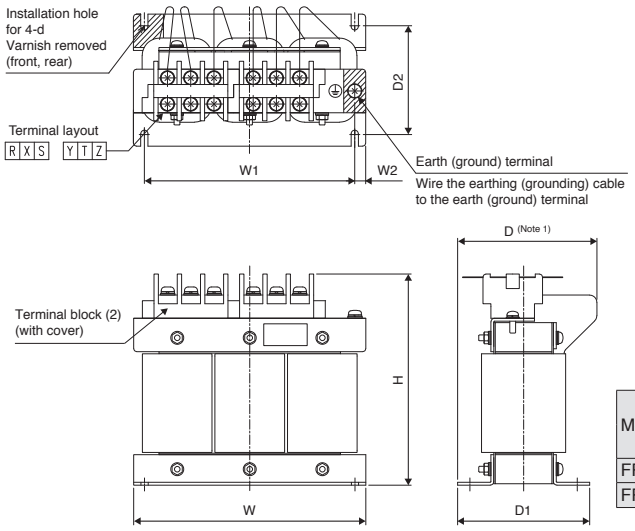

Model	Variable dimensions [mm]								Mass [kg]	Terminal size
	W	W1	W2	H	D (Note 1)	D1	D2	d		
FR-HAL-H11K	160	145	8	146	91	91	75	M4	6.0	M5
FR-HAL-H15K	220	200	10	195	105	90	70	M5	9.0	M5

H

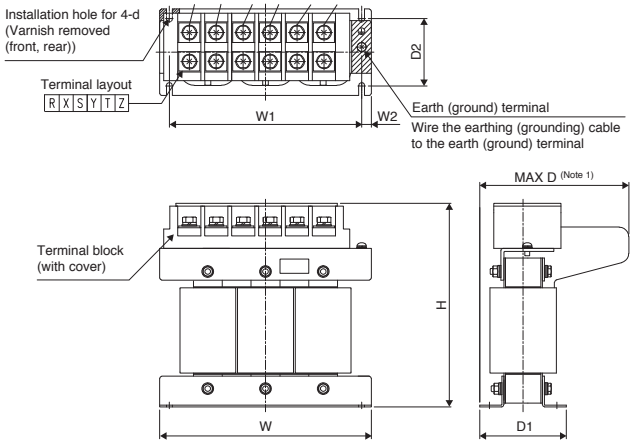

Model	Variable dimensions [mm]								Mass [kg]	Terminal size
	W	W1	W2	H	D (Note 1)	D1	D2	d		
FR-HAL-H22K	220	200	10	212	155	90	70	M5	9.5	M5
FR-HAL-H30K	220	200	10	212	153	96	75	M5	11	M5

Notes: 1. This indicates the maximum dimension. The dimension varies depending on the bending degree of the input/output lines.

AC Reactor (MR-AL)

DG

Power regeneration converter unit model	AC reactor model	Fig.
MR-CV11K4	MR-AL-11K4	A
MR-CV18K4	MR-AL-18K4	
MR-CV30K4	MR-AL-30K4	
MR-CV37K4	MR-AL-37K4	
MR-CV45K4	MR-AL-45K4	
MR-CV55K4	MR-AL-55K4	
MR-CV75K4	MR-AL-75K4	

Connections

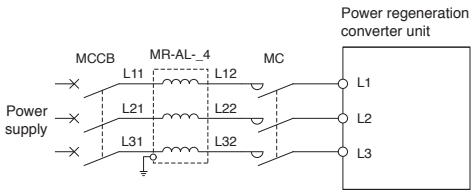

Dimensions

A

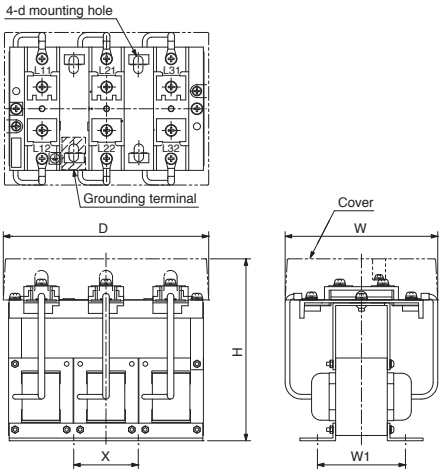

Model	Variable dimensions [mm]						Mass [kg]	Terminal screw size
	W	D	H	W1	X	d		
MR-AL-11K4	145	175	155	75	55	M6	3.7	M5
MR-AL-18K4	145	175	155	105	55	M6	5.3	M6
MR-AL-30K4	145	175	155	110	55	M6	6.0	M6
MR-AL-37K4	150	215	175	110	70	M6	8.5	M6
MR-AL-45K4	160	215	175	120	70	M6	9.8	M6
MR-AL-55K4	230	220	210	120	200	M8	10.5	M6
MR-AL-75K4	230	250	215	143	230	M8	13.0	M6

Drive System Sizing Software MELSOFT Motorizer

MELSOFT

Specifications

Item	Description
Types of motor/drive	Servo, Inverter, Sensorless servo
Types of load mechanism	Ball screw, Rack and pinion, Roll feed, Rotary table, Cart, Elevator/Hoist, Conveyor, Fan, Pump, Crank, Winding/Unwinding, Generic (Rotary), Generic (Linear), Linear servo
Types of transmission mechanism	Coupling, External gear reducer, V belt and pulley, Toothed belt/roller chain
Operation pattern	Constant speed/Pause, Acceleration/Deceleration, Trapezoid, Triangle, Speed CSV File, MELSOFT GX LogViewer file
Types of input support of moment of inertia calculation function	Solid cylinder, Hollow cylinder, Disk, Rectangular solid, Truncated cone, Sphere, Generic
Sizing results	Result, Motor type, Power supply voltage, Motor, Motor capacity, Drive, Drive capacity, Effective torque, Torque effective load rate, Peak torque, Peak load rate, Effective torque at stop, Effective load rate at stop, Motor output, Motor output rate, Maximum speed, Maximum speed rate, Maximum load inertia moment, Inertia moment ratio, Regenerative power, Regenerative load ratio, Regenerative option, Maximally increased torque, Rated speed, Brake, Oil seal, Structure specification, Graph of Motor side speed/Motor side torque/Motor output
Printing of output of results	Prints load mechanism, transmission mechanism, operation pattern, and sizing results.
Data saving	Load mechanism, transmission mechanism, operation pattern, motor selection, drive selection, and sizing results are saved with a file name.

Operating environment (Note 1, 2)

Item		Description
OS		Microsoft® Windows® 11 Microsoft® Windows® 10 (64-bit/32-bit)
.NET Framework		.NET Framework 4.6 or later
CPU	Windows® 11	2 or more cores on a compatible 64-bit processor or System on a Chip (SoC)
	Windows® 10	Desktop PC: Intel® Celeron® processor 2.4 GHz or more recommended Laptop PC: Intel® Pentium® processor 1.9 GHz or more recommended
Memory	Windows® 11	4 GB or more recommended
	Windows® 10	For 64-bit OS: 2 GB or more recommended, For 32-bit OS:1 GB or more recommended
Required hard disk space		For installation: 1 GB or more free hard disk space For operation: 512 MB or more free virtual memory space
Monitor		Resolution 1024 × 768 or more (XGA) Compatible with above personal computers

Notes: 1. This software may not run correctly on some personal computers.
2. Surrogate pair characters and environment dependent characters are not available.

Servo Engineering Software MELSOFT MR Configurator2 (SW1DND-MRC2-EC) (Note 1)

MELSOFT

MR Configurator2 can be obtained by either of the following:
- Purchase MR Configurator2 alone.
- Purchase GX Works3 or MT Works2: MR Configurator2 is included in GX Works3 and MT Works2 with software version 1.34L or later.

Specification (Note 2)

Item	Description
Project	New/Open/Save/Save As/Delete Project, Read Other Format, Write Other Format, System Setting, Print
Parameter	Parameter Setting, Network Parameter, Axis Name Setting, Parameter Converter
Safety	Safety parameter setting, Change password, Initialize password
Positioning-data	Point Table, Program, Indirect Addressing, Cam Data
Monitor	Display All, I/O Monitor, Graph, ABS Data Display, Object Monitor
Diagnosis	Alarm Display, Alarm Onset Data, Drive recorder, No Motor Rotation, System Configuration, Life Diagnosis, Machine Diagnosis, Linear Diagnosis, Fully Closed Loop Diagnosis, Gear Failure Diagnosis, Encoder Communication Diagnosis
Test Operation	JOG Operation, Positioning Operation, Motor-Less Operation, DO Forced Output, Program Operation, Single-Step Feed, Homing, Test Operation Information
Adjustment	One-Touch Tuning, Tuning, Multi-Axis Tuning, Machine Analyzer, Advanced Gain Search
Others	Servo Assistant, Update Parameter Setting Range, Machine Unit Conversion Setting, Switch Display Language, Axis Label Name Settings, Add-ons, Help

Notes: 1. Each servo amplifier is supported by MR Configurator2 with the following or later software version.
• MR-J5_-G/MR-J5-A: 1.100E • MR-J5D_-G: 1.125F • MR-J5-G4-HS: 1.150G • MR-J5-B: 1.130L
2. Supported items vary depending on the servo amplifiers. Refer to "MR Configurator2 SW1DND-MRC2-EC Installation Guide" for details.

Operating environment (Note 1, 3, 4)

Components		Description
OS		Microsoft® Windows® 11 Education Microsoft® Windows® 11 Enterprise Microsoft® Windows® 11 Pro Microsoft® Windows® 11 Home Microsoft® Windows® 10 Education Microsoft® Windows® 10 Enterprise Microsoft® Windows® 10 Pro Microsoft® Windows® 10 Home Microsoft® Windows® 10 IoT Enterprise 2016 LTSB (Note 2) Microsoft® Windows® 10 IoT Enterprise 2019 LTSC (Note 2)
CPU	Windows® 11	2 or more cores on a compatible 64-bit processor or System on a Chip (SoC)
	Windows® 10	Desktop PC: Intel® Celeron® processor 2.8 GHz or more recommended Laptop PC: Intel® Pentium® M processor 1.7 GHz or more recommended
Memory	Windows® 11	4 GB or more recommended
	Windows® 10	For 64-bit OS: 2 GB or more recommended, For 32-bit OS: 1 GB or more recommended
Required hard disk space		1.5 GB or more
Monitor		Resolution 1024 × 768 or more, 16-bit high color, Compatible with above personal computers
USB cable		MR-J3USBCBL3M
Ethernet cable		Cable type: Category 5e or higher, (double shielded/STP) straight cable Standard: IEEE802.3 (1000BASE-T) or ANSI/TIA/EIA-568-B (Category 5e) Connector: RJ-45 connector with shield

Notes: 1. This software may not run correctly on some personal computers.
2. This software is supported by 64-bit OS only.
3. Surrogate pair characters and environment dependent characters are not available.
4. When .NET Framework 3.5 (including .NET 2.0 and 3.0) is disabled, enable the .NET Framework.

Unit Conversion Table

Quantity	SI (metric) unit	U.S. customary unit
Mass	1 [kg]	2.2046 [lb]
Length	1 [mm]	0.03937 [in]
Torque	1 [N•m]	141.6 [oz•in]
Moment of inertia	1 [(× 10^{-4} kg•m^2)]	5.4675 [oz•in^2]
Load (thrust load/axial load)	1 [N]	0.2248 [lbf]
Temperature	n [°C]	n × 9/5 + 32 [°F]

8 Low-Voltage Switchgear/ Wires

Wires, Molded-Case Circuit Breakers, and Magnetic Contactors 8-2

Selection Example According to IEC/EN/UL 61800-5-1 and CSA C22.2 No. 274 8-6

Type E Combination Motor Controller 8-10

Selection Example in HIV Wires for Servo Motors 8-11

G MR-J5-G(-N1) **G-HS** MR-J5-G-HS(N1) **G-RJ** MR-J5-G-RJ(N1) **WG** MR-J5W2-G(-N1)/MR-J5W3-G(-N1) **DG** MR-J5D1-G4(-N1)/ MR-J5D2-G4(-N1)/MR-J5D3-G4(-N1) **B** MR-J5-B **B-RJ** MR-J5-B-RJ **WB** MR-J5W2-B/MR-J5W3-B **A** MR-J5-A **A-RJ** MR-J5-A-RJ

* Note that low-voltage switchgears/wires necessary for servo amplifiers/drive units with special specifications are the same as those for standard servo amplifiers/ drive units. Refer to the servo amplifiers or drive units with the same rated output.
* Refer to p. 7-90 in this catalog for conversion of units.

Wires, Molded-Case Circuit Breakers, and Magnetic Contactors

G G-HS G-RJ B B-RJ A A-RJ

The following are examples of wire sizes when 600 V grade heat-resistant polyvinyl chloride insulated wires (HIV wires) are used. The wire size for U/V/W/E varies depending on the servo motor. Refer to "Selection Example in HIV Wires for Servo Motors" in this catalog for details on wires for each servo motor.

Wires and molded-case circuit breakers (MR-J5-G/MR-J5-B/MR-J5-A)

Servo amplifier model	Molded-case circuit breaker (Note 2, 4)	Wire size [mm²] (Note 4)			
		L1/L2/L3/⏚	L11/L21	P+/C (Note 1)	U/V/W/E (Note 3)
MR-J5-10G/B/A	30 A frame 5 A (30 A frame 5 A) (Note 5)	2 (AWG 14)	1.25 to 2 (AWG 16 to 14)	2 (AWG 14)	0.75 to 2 (AWG 18 to 14)
MR-J5-20G/B/A	30 A frame 5 A (30 A frame 5 A) (Note 5)				
MR-J5-40G/B/A	30 A frame 10 A (30 A frame 5 A) (Note 5)				
MR-J5-60G/B/A	30 A frame 15 A (30 A frame 10 A) (Note 5)				
MR-J5-70G/B/A	30 A frame 15 A (30 A frame 10 A) (Note 5)				
MR-J5-100G/B/A (3-phase power input)	30 A frame 15 A (30 A frame 10 A) (Note 5)				
MR-J5-100G/B/A (1-phase power input)	30 A frame 15 A (30 A frame 15 A) (Note 5)				
MR-J5-200G/B/A (3-phase power input)	30 A frame 20 A (30 A frame 20 A) (Note 5)				0.75 to 5.5 (AWG 18 to 10)
MR-J5-200G/B/A (1-phase power input)	30 A frame 20 A (30 A frame 20 A) (Note 5)	3.5 (AWG 12)			
MR-J5-350G/B/A	30 A frame 30 A (30 A frame 30 A) (Note 5)				
MR-J5-500G/B/A	50 A frame 50 A (50 A frame 50 A) (Note 5)	5.5 (AWG 10)			0.75 to 8 (AWG 18 to 8)
MR-J5-700G/B/A	100 A frame 75 A (60 A frame 60 A) (Note 5)	8 (AWG 8)			
MR-J5-12KG/B/A (Note 7)	100 A frame 100 A (100 A frame 100 A) (Note 6)	14 (AWG 6)		3.5 (AWG 12)	14 (AWG 6)
MR-J5-17KG/B/A (Note 7)	125 A frame 125 A (125 A frame 125 A) (Note 6)	22 (AWG 4)		5.5 (AWG 10)	22 (AWG 4)
MR-J5-25KG/B/A (Note 7)	225 A frame 175 A (225 A frame 175 A) (Note 6)	38 (AWG 2)			38 (AWG 2)

Wires and molded-case circuit breakers (MR-J5-G4/MR-J5-B4/MR-J5-A4)

Servo amplifier model	Molded-case circuit breaker (Note 2, 4)	Wire size [mm²] (Note 4)			
		L1/L2/L3/⏚	L11/L21	P+/C (Note 1)	U/V/W/E (Note 3)
MR-J5-60G4/B4/A4	30 A frame 5 A (30 A frame 5 A) (Note 5)	2 (AWG 14)	1.25 to 2 (AWG 16 to 14)	2 (AWG 14)	0.75 to 2 (AWG 18 to 14)
MR-J5-100G4/B4/A4	30 A frame 10 A (30 A frame 5 A) (Note 5)				
MR-J5-200G4/B4/A4	30 A frame 15 A (30 A frame 10 A) (Note 5)				
MR-J5-350G4/B4/A4	30 A frame 20 A (30 A frame 15 A) (Note 5)				
MR-J5-500G4/B4/A4	30 A frame 20 A (30 A frame 20 A) (Note 5)				0.5 to 10 (AWG 20 to 8)
MR-J5-700G4/B4/A4	30 A frame 30 A (30 A frame 30 A) (Note 5)	3.5 (AWG 12)			
MR-J5-12KG4/B4/A4 (Note 7)	50 A frame 50 A (50 A frame 50 A) (Note 6)	5.5 (AWG 10)			8 (AWG 8)
MR-J5-17KG4/B4/A4 (Note 7)	60 A frame 60 A (60 A frame 60 A) (Note 6)	8 (AWG 8)		3.5 (AWG 12)	
MR-J5-25KG4/B4/A4 (Note 7)	100 A frame 100 A (100 A frame 100 A) (Note 6)	14 (AWG 6)			14 (AWG 6)

Notes: 1. Keep the wire length to the regenerative option within 5 m.
2. When using a power improving reactor, use a molded-case circuit breaker listed in the brackets.
3. The wire size shows applicable size for the servo amplifier connector or terminal block.
4. When complying with IEC/EN/UL/CSA standard, refer to "Selection Example According to IEC/EN/UL 61800-5-1 and CSA C22.2 No. 274" in this catalog.
5. These selection examples are for when one molded-case circuit breaker is installed for one unit of servo amplifier. When connecting multiple units of servo amplifiers, refer to "MR-J5 User's Manual".
6. Install one molded-case circuit breaker for each servo amplifier.
7. When connecting the wires to the terminal blocks, use the screws attached to the terminal blocks.

Wires, Molded-Case Circuit Breakers, and Magnetic Contactors

G | G-HS | G-RJ | B | B-RJ | A | A-RJ

Magnetic contactors (MR-J5-G/MR-J5-B/MR-J5-A)

Servo amplifier model	Magnetic contactor	
	On/off of main circuit power supply	
	AC power supply (Note 1)	DC power supply (Note 2)
MR-J5-10G/B/A	S-T10 (Note 3)	SD-T12 (Note 3)
MR-J5-20G/B/A		
MR-J5-40G/B/A		
MR-J5-60G/B/A		
MR-J5-70G/B/A		
MR-J5-100G/B/A		
MR-J5-200G/B/A	S-T10, S-T21 (Note 3)	SD-T21 (Note 3)
MR-J5-350G/B/A	S-T21 (Note 3)	
MR-J5-500G/B/A	S-T25, S-T35 (Note 3)	SD-T35 (Note 3)
MR-J5-700G/B/A	S-T35, S-T50 (Note 3)	SD-T50 (Note 3)
MR-J5-12KG/B/A (Note 5)	S-T50 (Note 4)	SD-T50 (Note 4)
MR-J5-17KG/B/A (Note 5)	S-T65 (Note 4)	SD-T65 (Note 4)
MR-J5-25KG/B/A (Note 5)	S-T100 (Note 4)	SD-T100 (Note 4)

Magnetic contactors (MR-J5-G4/MR-J5-B4/MR-J5-A4)

Servo amplifier model	Magnetic contactor	
	On/off of main circuit power supply	
	AC power supply (Note 1)	DC power supply (Note 2)
MR-J5-60G4/B4/A4	S-T10 (Note 3)	SD-T12 (Note 3)
MR-J5-100G4/B4/A4		
MR-J5-200G4/B4/A4		
MR-J5-350G4/B4/A4	S-T21 (Note 3)	SD-T21 (Note 3)
MR-J5-500G4/B4/A4		
MR-J5-700G4/B4/A4		
MR-J5-12KG4/B4/A4 (Note 5)	S-T35 (Note 4)	SD-T35 (Note 4)
MR-J5-17KG4/B4/A4 (Note 5)	S-T35 (Note 4)	SD-T35 (Note 4)
MR-J5-25KG4/B4/A4 (Note 5)	S-T50 (Note 4)	SD-T50 (Note 4)

Notes:
1. Use a magnetic contactor with an operation delay time of 80 ms or less. The operation delay time is the time interval from current being applied to the coil until closure of contacts.
2. Use a magnetic contactor with an operation delay time of 90 ms or less. The operation delay time is the time interval from current being applied to the coil until closure of contacts.
3. These selection examples are for when one molded-case circuit breaker is installed for one unit of servo amplifier. When connecting multiple units of servo amplifiers, refer to "MR-J5 User's Manual".
4. Install one magnetic contactor for each servo amplifier.
5. When connecting the wires to the terminal blocks, use the screws attached to the terminal blocks.

Wires, Molded-Case Circuit Breakers, and Magnetic Contactors

WG WB

The following are examples of wire sizes when 600 V grade heat-resistant polyvinyl chloride insulated wires (HIV wires) are used. The wire size for U/V/W/E varies depending on the servo motor. Refer to "Selection Example in HIV Wires for Servo Motors" in this catalog for details on wires for each servo motor.

Wires (MR-J5W2-G/MR-J5W3-G/MR-J5W2-B/MR-J5W3-B)

Servo amplifier model	Wire size [mm²] (Note 3)			
	L1/L2/L3/⏚	L11/L21	P+/C (Note 5)	U/V/W/E (Note 2)
MR-J5W2-22G/B	2 (AWG 14)	2 (AWG 14)	2 (AWG 14)	0.75 to 2 (AWG 18 to 14)
MR-J5W2-44G/B				
MR-J5W2-77G/B				
MR-J5W2-1010G/B				
MR-J5W3-222G/B				
MR-J5W3-444G/B				

Molded-case circuit breakers (MR-J5W2-G/MR-J5W2-B) (Note 4)

Total output of rotary servo motors	Total continuous thrust of linear servo motors	Total output of direct drive motors	Molded-case circuit breaker (Note 3, 6)
300 W or less	-	-	30 A frame 5 A
Over 300 W to 600 W	150 N or less	100 W or less	30 A frame 10 A
Over 600 W to 1 kW	Over 150 N to 300 N	Over 100 W to 252 W	30 A frame 15 A
Over 1 kW to 2 kW	Over 300 N to 720 N	Over 252 W to 838 W	30 A frame 20 A

Magnetic contactor (MR-J5W2-G/MR-J5W2-B) (Note 4)

Total output of rotary servo motors	Total continuous thrust of linear servo motors	Total output of direct drive motors	Magnetic contactor (Note 1, 6)	
			On/off of main circuit power supply	
			AC power supply	DC power supply
300 W or less	-	-	S-T10	SD-T12
Over 300 W to 600 W	150 N or less	100 W or less		
Over 600 W to 1 kW	Over 150 N to 300 N	Over 100 W to 252 W		
Over 1 kW to 2 kW	Over 300 N to 720 N	Over 252 W to 838 W	S-T21	SD-T21

Molded-case circuit breakers (MR-J5W3-G/MR-J5W3-B) (Note 4)

Total output of rotary servo motors	Total continuous thrust of linear servo motors	Total output of direct drive motors	Molded-case circuit breaker (Note 3, 6)
450 W or less	150 N or less	-	30 A frame 10 A
Over 450 W to 800 W	Over 150 N to 300 N	252 W or less	30 A frame 15 A
Over 800 W to 1.5 kW	Over 300 N to 450 N	Over 252 W to 378 W	30 A frame 20 A

Magnetic contactor (MR-J5W3-G/MR-J5W3-B) (Note 4)

Total output of rotary servo motors	Total continuous thrust of linear servo motors	Total output of direct drive motors	Magnetic contactor (Note 1, 6)	
			On/off of main circuit power supply	
			AC power supply	DC power supply
450 W or less	150 N or less	-	S-T10	SD-T12
Over 450 W to 800 W	Over 150 N to 300 N	252 W or less		
Over 800 W to 1.5 kW	Over 300 N to 450 N	Over 252 W to 378 W	S-T21	SD-T21

Notes:
1. Use a magnetic contactor with an operation delay time of 80 ms or less. The operation delay time is the time interval from current being applied to the coil until closure of contacts.
2. The wire size shows applicable size for the servo amplifier connector.
3. When complying with IEC/EN/UL/CSA standard, refer to "Selection Example According to IEC/EN/UL 61800-5-1 and CSA C22.2 No. 274" in this catalog.
4. When multiple different types of servo motors (rotary servo motor, linear servo motor, or direct drive motor) are connected to the multi-axis servo amplifier, refer to "MR-J5 User's Manual" for selecting a molded-case circuit breaker and a magnetic contactor.
5. Keep the wire length to the regenerative option within 5 m.
6. These selection examples are for when one molded-case circuit breaker and one magnetic contactor are installed for one unit of servo amplifier. When connecting multiple units of servo amplifiers, refer to "MR-J5 User's Manual".

Wires, Molded-Case Circuit Breakers, and Magnetic Contactors

The following are examples of wire sizes when 600 V grade heat-resistant polyvinyl chloride insulated wires (HIV wires) are used. The wire size for U/V/W/E varies depending on the servo motor. Refer to "Selection Example in HIV Wires for Servo Motors" in this catalog for details on wires for each servo motor.

Wires (MR-J5D1-G4/MR-J5D2-G4/MR-J5D3-G4)

DG

Drive unit model (Note 1)	Wire size [mm²] (Note 2, 3)	
	L11/L21/⏚	U/V/W/E
MR-J5D1-100G4	1.25 to 5.5 (AWG 16 to 10) (Note 8)	1.25 to 2 (AWG 16 to 14)
MR-J5D1-200G4		
MR-J5D1-350G4		
MR-J5D1-500G4		3.5 (AWG 12)
MR-J5D1-700G4		5.5 (AWG 10)
MR-J5D2-100G4		1.25 to 2 (AWG 16 to 14)
MR-J5D2-200G4		
MR-J5D2-350G4		
MR-J5D2-500G4		3.5 (AWG 12)
MR-J5D2-700G4		5.5 (AWG 10)
MR-J5D3-100G4		1.25 to 2 (AWG 16 to 14)
MR-J5D3-200G4		

Wires (MR-CM3K)

G G-RJ WG B B-RJ WB A A-RJ

Simple converter unit model	Wire size [mm²] (Note 2, 3)	
	L1/L2/L3/⏚	P4/N-
MR-CM3K	3.5 (AWG 12)	3.5 (AWG 12)

Molded-case circuit breaker and magnetic contactor (MR-CM3K)

Simple converter unit model	Total capacity of servo amplifiers (Note 7)	Molded-case circuit breaker (Note 3, 5, 6)	Magnetic contactor (Note 4, 6)	
			On/off of main circuit power supply	
			AC power supply	DC power supply
MR-CM3K	Less than 2 kW	30 to 125 A frame 15 to 20 A (30 to 125 A frame 15 to 20 A)	S-T21	SD-T21
	2 kW or over	30 to 125 A frame 20 to 30 A (30 to 125 A frame 20 to 30 A)	S-T21	SD-T21

Wires, molded-case circuit breaker, and magnetic contactor (MR-CV_4)

DG

Power regeneration converter unit model (Note 1)	Molded-case circuit breaker (Note 3, 6)	Magnetic contactor (Note 4, 6)	Wire size [mm²] (Note 2, 3)	
			L1/L2/L3/⏚	L11/L21
MR-CV11K4	30 A frame 30 A	S-T21	5.5 (AWG 10)	1.25 to 2 (AWG 16 to 14)
MR-CV18K4	50 A frame 50 A	S-T35	8 (AWG 8)	
MR-CV30K4	100 A frame 80 A	S-T65	14 (AWG 6)	
MR-CV37K4	100 A frame 100 A	S-T80	22 (AWG 4)	
MR-CV45K4	125 A frame 125 A	S-T100		
MR-CV55K4	225 A frame 150 A	S-N125	38 (AWG 2)	
MR-CV75K4	225 A frame 200 A	S-N150	60 (AWG 2/0)	

Notes:
1. When connecting the wires to the terminal blocks, use the screws attached to the terminal blocks.
2. Wires are selected based on the highest rated current among the servo motors to be combined.
3. When complying with IEC/EN/UL/CSA standard, refer to "Selection Example According to IEC/EN/UL 61800-5-1 and CSA C22.2 No. 274" in this catalog.
4. Use a magnetic contactor with an operation delay time of 80 ms or less. The operation delay time is the time interval from current being applied to the coil until closure of contacts.
5. When using a power improving reactor, use a molded-case circuit breaker listed in the brackets.
6. Install one molded-case circuit breaker and one magnetic contactor for one converter unit.
7. The sum of rated capacities [kW] of connected servo amplifiers ≤ 3 kW (MR-CM3K rated output)
   When using a multi-axis servo amplifier, calculate the sum of the rated capacities of all axes as the rated capacity of the servo amplifier.
8. The National Electrical Code recommends that the wire size should be a minimum of AWG 14 (2 mm²).

Selection Example According to IEC/EN/UL 61800-5-1 and CSA C22.2 No. 274

The following are examples of molded-case circuit breakers, semiconductor fuses, and Class T/J/CC fuses selected on the basis of the rated inputs/outputs of the servo amplifiers.

G | G-HS | G-RJ | WG | B | B-RJ | WB | A | A-RJ

Molded-case circuit breakers, semiconductor fuses, and Class T/J/CC fuses
(MR-J5-G/MR-J5W2-G/MR-J5W3-G/MR-J5-B/MR-J5W2-B/MR-J5W3-B/MR-J5-A)

Servo amplifier model	Molded-case circuit breaker (240 V AC) SCCR 50 kA (Mitsubishi Electric)	Semiconductor fuse (700 V) SCCR 100 kA (Bussmann)	Class T/J/CC fuse (600 V) SCCR 5 kA
MR-J5-10G/B/A	NF125-SVU-15A (125 A frame 15 A)	170M1408 (10 A)	3 A
MR-J5-20G/B/A			6 A
MR-J5-40G/B/A			10 A
MR-J5-60G/B/A (3-phase power input)			
MR-J5-60G/B/A (1-phase power input)		170M1409 (16 A)	
MR-J5-70G/B/A (3-phase power input)		170M1408 (10 A)	
MR-J5-70G/B/A (1-phase power input)		170M1409 (16 A)	15 A
MR-J5-100G/B/A (3-phase power input)			10 A
MR-J5-100G/B/A (1-phase power input)		170M1412 (32 A)	20 A
MR-J5-200G/B/A (3-phase power input)			25 A
MR-J5-200G/B/A (1-phase power input)	NF125-SVU-20A (125 A frame 20 A)	170M1413 (40 A)	35 A
MR-J5-350G/B/A			
MR-J5-500G/B/A	NF125-SVU-30A (125 A frame 30 A) (Note 1)	170M1415 (63 A)	45 A
MR-J5-700G/B/A	NF125-SVU-40A (125 A frame 40 A) (Note 1)	170M1416 (80 A)	60 A
MR-J5-12KG/B/A (Note 2)	NF125-SVU-75A (125 A frame 75 A) (Note 1)	170M1418 (125 A)	- (Note 1)
MR-J5-17KG/B/A (Note 2)	NF125-SVU-100A (125 A frame 100 A) (Note 1)	170M1419 (160 A)	
MR-J5-25KG/B/A (Note 2)	NF125-SVU-150A (125 A frame 150 A) (Note 1)	170M1421 (250 A)	
MR-J5W2-22G/B (3-phase power input)	NF125-SVU-15A (125 A frame 15 A)	170M1408 (10 A)	10 A
MR-J5W2-22G/B (1-phase power input)		170M1409 (16 A)	
MR-J5W2-44G/B (3-phase power input)			
MR-J5W2-44G/B (1-phase power input)		170M1412 (32 A)	15 A
MR-J5W2-77G/B (3-phase power input)			15 A (Note 3)
MR-J5W2-77G/B (1-phase power input)	NF125-SVU-20A (125 A frame 20 A)	170M1413 (40 A)	
MR-J5W2-1010G/B	NF125-SVU-15A (125 A frame 15 A)	170M1412 (32 A)	15 A
MR-J5W3-222G/B (3-phase power input)		170M1409 (16 A)	10 A
MR-J5W3-222G/B (1-phase power input)		170M1412 (32 A)	15 A
MR-J5W3-444G/B (3-phase power input)			15 A (Note 3)
MR-J5W3-444G/B (1-phase power input)	NF125-SVU-20A (125 A frame 20 A)	170M1413 (40 A)	

Notes: 1. For the use under the conditions of UL Listed, select a semiconductor fuse.
2. When connecting the wires to the terminal blocks, use the screws attached to the terminal blocks.
3. For 1-phase 200 V AC power supply input, use the servo amplifiers at 70 % or less of the effective load ratio.

Selection Example According to IEC/EN/UL 61800-5-1 and CSA C22.2 No. 274

The following are examples of molded-case circuit breakers, semiconductor fuses, and Class T/J/CC fuses selected on the basis of the rated inputs/outputs of the servo amplifiers.

G G-HS G-RJ B B-RJ A A-RJ

Molded-case circuit breakers, semiconductor fuses, and Class T/J/CC fuses (MR-J5-G4/MR-J5-B4/MR-J5-A4)

Servo amplifier model	Molded-case circuit breaker (480 V AC) SCCR 30 kA (Mitsubishi Electric)	Semiconductor fuse (700 V) SCCR 100 kA (Bussmann)	Class T/J/CC fuse (600 V) SCCR 5 kA
MR-J5-60G4/B4/A4	NF125-SVU-15A (125 A frame 15 A) (Note 1)	170M1408 (10 A)	6 A
MR-J5-100G4/B4/A4			10 A
MR-J5-200G4/B4/A4		170M1409 (16 A)	
MR-J5-350G4/B4/A4		170M1412 (32 A)	20 A
MR-J5-500G4/B4/A4	NF125-SVU-20A (125 A frame 20 A) (Note 1)	170M1413 (40 A)	25 A
MR-J5-700G4/B4/A4	NF125-SVU-30A (125 A frame 30 A) (Note 1)	170M1414 (50 A)	30 A
MR-J5-12KG4/B4/A4 (Note 2)	NF125-SVU-40A (125 A frame 40 A) (Note 1)	170M1416 (80 A)	- (Note 1)
MR-J5-17KG4/B4/A4 (Note 2)	NF125-SVU-50A (125 A frame 50 A) (Note 1)	170M1418 (125 A)	
MR-J5-25KG4/B4/A4 (Note 2)	NF125-SVU-75A (125 A frame 75 A) (Note 1)		

Notes: 1. For the use under the conditions of UL Listed, select a semiconductor fuse.
2. When connecting the wires to the terminal blocks, use the screws attached to the terminal blocks.

The following are examples of molded-case circuit breakers and semiconductor fuses selected on the basis of the rated inputs/outputs of the converter units.

G G-RJ WG B B-RJ WB A A-RJ

Molded-case circuit breakers and semiconductor fuses (MR-CM3K)

Simple converter unit model	Total capacity of servo amplifiers	Molded-case circuit breaker (240 V AC) SCCR 50 kA (Mitsubishi Electric)	Semiconductor fuse (700 V) SCCR 100 kA (Bussmann)
MR-CM3K	Less than 2 kW	NF125-SVU-15A (125 A frame 15 A)	170M1409 (16 A)
	2 kW or over	NF125-SVU-20A (125 A frame 20 A)	170M1413 (40 A)

Semiconductor fuses (MR-CV_4)

DG

Power regeneration converter unit model (Note 1)	Semiconductor fuse (700 V) SCCR 100 kA (Bussmann)
MR-CV11K4	170M1413 (40 A)
MR-CV18K4	170M1416 (80 A)
MR-CV30K4	170M1419 (160 A)
MR-CV37K4	
MR-CV45K4	170M1420 (200 A)
MR-CV55K4	170M1421 (250 A)
MR-CV75K4	170M1422 (315 A)

Notes: 1. When connecting the wires to the terminal blocks, use the screws attached to the terminal blocks.

Selection Example According to IEC/EN/UL 61800-5-1 and CSA C22.2 No. 274

The following are examples of recommended wire sizes selected on the basis of the rated inputs/outputs of the servo amplifiers or the drive units.

Recommended wires

G G-HS G-RJ WG B B-RJ WB A A-RJ

(MR-J5-G/MR-J5W2-G/MR-J5W3-G/MR-J5-B/MR-J5W2-B/MR-J5W3-B/MR-J5-A)

Servo amplifier model	75 °C stranded wire [AWG]			
	L1/L2/L3/⏚	L11/L21	P+/C	U/V/W/E
MR-J5-10G/B/A	14	14	14	14
MR-J5-20G/B/A				
MR-J5-40G/B/A				
MR-J5-60G/B/A				
MR-J5-70G/B/A				
MR-J5-100G/B/A				
MR-J5-200G/B/A (3-phase power input)				
MR-J5-200G/B/A (1-phase power input)	12			
MR-J5-350G/B/A				12
MR-J5-500G/B/A	10			8
MR-J5-700G/B/A	8			
MR-J5-12KG/B/A (Note 1)	4		12	4
MR-J5-17KG/B/A (Note 1)	2		10	2
MR-J5-25KG/B/A (Note 1)	1/0			2/0
MR-J5W2-22G/B	14		14	14
MR-J5W2-44G/B				
MR-J5W2-77G/B				
MR-J5W2-1010G/B				
MR-J5W3-222G/B				
MR-J5W3-444G/B				

Recommended wires (MR-J5-G4/MR-J5-B4/MR-J5-A4)

G G-HS G-RJ B B-RJ A A-RJ

Servo amplifier model	75 °C stranded wire [AWG]			
	L1/L2/L3/⏚	L11/L21	P+/C	U/V/W/E
MR-J5-60G4/B4/A4	14	14	14	14
MR-J5-100G4/B4/A4				
MR-J5-200G4/B4/A4				
MR-J5-350G4/B4/A4				
MR-J5-500G4/B4/A4				12
MR-J5-700G4/B4/A4	12			10
MR-J5-12KG4/B4/A4 (Note 1)	8			8
MR-J5-17KG4/B4/A4 (Note 1)	6		12	6
MR-J5-25KG4/B4/A4 (Note 1)	4			4

Recommended wires (MR-J5D1-G4/MR-J5D2-G4/MR-J5D3-G4)

DG

Drive unit model (Note 1)	75 °C stranded wire [AWG]	
	L11/L21/⏚	U/V/W/E
MR-J5D1-100G4	14	14
MR-J5D1-200G4		
MR-J5D1-350G4		
MR-J5D1-500G4		12
MR-J5D1-700G4		10
MR-J5D2-100G4		14
MR-J5D2-200G4		
MR-J5D2-350G4		
MR-J5D2-500G4		12
MR-J5D2-700G4		10
MR-J5D3-100G4		14
MR-J5D3-200G4		

Notes: 1. When connecting the wires to the terminal blocks, use the screws attached to the terminal blocks.

Selection Example According to IEC/EN/UL 61800-5-1 and CSA C22.2 No. 274

The following are examples of recommended wire sizes selected on the basis of the rated inputs/outputs of the converter units.

Recommended wires (MR-CM3K)

G G-RJ WG B B-RJ WB A A-RJ

Simple converter unit model	75 °C stranded wire [AWG]	
	L1/L2/L3/ ⏚	P4/N-
MR-CM3K	14/12 (Note 2)	14/12 (Note 2)

Recommended wires (MR-CV_4)

DG

Power regeneration converter unit model (Note 1)	75 °C stranded wire [AWG]	
	L1/L2/L3/⏚	L11/L21
MR-CV11K4	10	14
MR-CV18K4	8	
MR-CV30K4	6	
MR-CV37K4	4	
MR-CV45K4		
MR-CV55K4	2	
MR-CV75K4	1/0	

Notes: 1. When connecting the wires to the terminal blocks, use the screws attached to the terminal blocks.
2. The wire size varies depending on a total current of connected servo amplifiers. When the total current is larger than 12 A, use AWG 12.

Type E Combination Motor Controller

G G-RJ WG B B-RJ WB A A-RJ

The Type E Combination Motor Controller is comprised of the Manual Motor Starter, Short-circuit Display Unit "UT-TU", and Power Side Terminal Cover Kit "UT-CV3".

Servo amplifier model	Rated input voltage AC [V]	Input phase (Note 2)	Manual Motor Starter (Note 4)			SCCR [kA] (Note 1)
			Model (Mitsubishi Electric)	Rated voltage AC [V]	Rated current [A] (Heater design)	
MR-J5-10G/B/A	200 to 240	3-phase	MMP-T32	240	1.6	50
MR-J5-20G/B/A					2.5	
MR-J5-40G/B/A					4	
MR-J5-60G/B/A					6.3	
MR-J5-70G/B/A						
MR-J5-100G/B/A					8	
MR-J5-200G/B/A					18	
MR-J5-350G/B/A					25	25
MR-J5-500G/B/A (Note 3)					32	
MR-J5W2-22G/B					6.3	50
MR-J5W2-44G/B					8	
MR-J5W2-77G/B					13	
MR-J5W2-1010G/B					18	
MR-J5W3-222G/B					8	
MR-J5W3-444G/B					13	

Notes: 1. The value is applicable when the Type E Combination Motor Controller is combined with the servo amplifier.
2. 1-phase power input is not supported.
3. For the use under the conditions of UL Listed, select a semiconductor fuse.
4. Use the MMP-T series products that bear the UL mark.

Selection Example in HIV Wires for Servo Motors

G | G-HS | G-RJ | WG | DG | B | B-RJ | WB | A | A-RJ

The following are examples of wire sizes when 600 V grade heat-resistant polyvinyl chloride insulated wires (HIV wires) with a length of 30 m are used.

Rotary servo motor model		Wire size [mm²] (Note 6)	
		For power and grounding (U/V/W/E)	For electromagnetic brake (B1/B2)
HK-KT_W	HK-KT053W	0.75 (AWG 18) (Note 1, 2, 3)	0.2 (AWG 24) (Note 4, 5)
	HK-KT13W		
	HK-KT1M3W		
	HK-KT13UW		
	HK-KT23W		
	HK-KT43W		
	HK-KT63W		
	HK-KT23UW		
	HK-KT43UW		
	HK-KT7M3W		
	HK-KT103W		
	HK-KT63UW		
	HK-KT7M3UW		
	HK-KT103UW		
	HK-KT153W		
	HK-KT203W	0.75 (AWG 18) (Note 1, 3, 7)	
	HK-KT202W	0.75 (AWG 18) (Note 1, 2, 3)	
HK-KT_4_W	HK-KT434W		
	HK-KT634W		
	HK-KT7M34W		
	HK-KT1034W		
	HK-KT634UW		
	HK-KT1034UW		
	HK-KT1534W		
	HK-KT2034W		
	HK-KT2024W		
HK-MT_W	HK-MT053W		
	HK-MT13W		
	HK-MT1M3W		
	HK-MT23W		
	HK-MT43W		
	HK-MT63W		
	HK-MT7M3W		
	HK-MT103W		
HK-MT_VW	HK-MT053VW		
	HK-MT13VW		
	HK-MT1M3VW		
	HK-MT23VW		
	HK-MT43VW		
	HK-MT63VW		
	HK-MT7M3VW		
	HK-MT103VW		

Notes:
1. Use fluorine resin wires of 0.75 mm² (AWG 18) for wiring to the servo motor power supply.
2. This size is applicable for wiring length of 10 m or shorter. For over 10 m, use MR-AEPB2J10CBL03M-_-L, MR-AEP2J10CBL03M-_-L, MR-AEPB2J20CBL03M-_-L, or MR-AEP2J20CBL03M-_-L, and extend it with HIV wires of 1.25 mm² (AWG 16).
3. Use a cable provided by Mitsubishi Electric or Mitsubishi Electric System & Service Co., Ltd. When fabricating a cable, select wires applicable for the usage. The National Electrical Code recommends that the wire size should be a minimum of AWG 14 (2 mm²).
4. Use fluorine resin wires of 0.2 mm² (AWG 24) for wiring to the electromagnetic brake.
5. This size is applicable for wiring length of 10 m or shorter. For over 10 m, extend the wires with HIV wires of 1.25 mm² (AWG 16).
6. The same wire size is applicable when the torques are increased.
7. This size is applicable for wiring length of 10 m or shorter. For over 10 m, use MR-AEPB2J10CBL03M-_-L, MR-AEP2J10CBL03M-_-L, MR-AEPB2J20CBL03M-_-L, or MR-AEP2J20CBL03M-_-L, and extend it with HIV wires of 2 mm² (AWG 14).

Selection Example in HIV Wires for Servo Motors

G | G-HS | G-RJ | WG | DG | B | B-RJ | WB | A | A-RJ

The following are examples of wire sizes when 600 V grade heat-resistant polyvinyl chloride insulated wires (HIV wires) with a length of 30 m are used. Refer to "Rotary Servo Motor User's Manual (For MR-J5)" when using cab-tire cables for supplying power (U/V/W) to HK-ST or HK-RT series.

Rotary servo motor model		Wire size [mm²] (Note 6)	
		For power and grounding (U/V/W/E)	For electromagnetic brake (B1/B2)
HK-ST_W (Note 7)	HK-ST52W	1.25 (AWG 16) (Note 5)	1.25 (AWG 16)
	HK-ST102W		
	HK-ST172W	2 (AWG 14)	
	HK-ST202AW		
	HK-ST302W		
	HK-ST353W	3.5 (AWG 12)	
	HK-ST503W	3.5 (AWG 12) (Note 8)	
	HK-ST7M2UW	1.25 (AWG 16) (Note 5)	
	HK-ST172UW		
	HK-ST202W	2 (AWG 14)	
	HK-ST352W	3.5 (AWG 12)	
	HK-ST502W	8 (AWG 8)	
	HK-ST702W		
HK-ST_4_W (Note 7)	HK-ST524W	1.25 (AWG 16) (Note 5)	1.25 (AWG 16)
	HK-ST1024W		
	HK-ST1724W		
	HK-ST2024AW		
	HK-ST3024W		
	HK-ST3534W	2 (AWG 14)	
	HK-ST5034W		
	HK-ST2024W	1.25 (AWG 16) (Note 5)	
	HK-ST3524W	2 (AWG 14)	
	HK-ST5024W	3.5 (AWG 12)	
	HK-ST7024W		
HK-RT_W	HK-RT103W	0.75 (AWG 18) (Note 1, 2, 5)	0.2 (AWG 24) (Note 4, 9)
	HK-RT153W	0.75 (AWG 18) (Note 1, 3, 5)	
	HK-RT203W		
	HK-RT353W	3.5 (AWG 12)	1.25 (AWG 16)
	HK-RT503W	5.5 (AWG 10)	
	HK-RT703W		
HK-RT_4W	HK-RT1034W	0.75 (AWG 18) (Note 1, 2, 5)	0.2 (AWG 24) (Note 4, 9)
	HK-RT1534W		
	HK-RT2034W		
	HK-RT3534W	1.25 (AWG 16) (Note 5)	1.25 (AWG 16)
	HK-RT5034W	2 (AWG 14)	
	HK-RT7034W		

Notes:
1. Use fluorine resin wires of 0.75 mm² (AWG 18) for wiring to the servo motor power supply.
2. This size is applicable for wiring length of 10 m or shorter. For over 10 m, use MR-AEPB2J10CBL03M-_-L, MR-AEP2J10CBL03M-_-L, MR-AEPB2J20CBL03M-_-L, or MR-AEP2J20CBL03M-_-L, and extend it with HIV wires of 1.25 mm² (AWG 16).
3. This size is applicable for wiring length of 10 m or shorter. For over 10 m, use MR-AEPB2J10CBL03M-_-L, MR-AEP2J10CBL03M-_-L, MR-AEPB2J20CBL03M-_-L, or MR-AEP2J20CBL03M-_-L, and extend it with HIV wires of 2 mm² (AWG 14).
4. Use fluorine resin wires of 0.2 mm² (AWG 24) for wiring to the electromagnetic brake.
5. The National Electrical Code recommends that the wire size should be a minimum of AWG 14 (2 mm²). Refer to "Rotary Servo Motor User's Manual (For MR-J5)" for details.
6. The same wire size is applicable when the torques are increased.
7. Wires for HK-ST152(4)G1/G1H/G5/G7 geared servo motors are the same as those for HK-ST172(4)W.
8. When using HK-ST503W for a machine that is required to comply with UL/CSA standards, use a cable (SC-PWC403C_M-SBLL or SC-PWC403C_M-SBLH) manufactured by Mitsubishi Electric System & Service Co., Ltd., and fabricate an extension cable with wires of AWG 10. For details of SC-PWC403C_M-SBLL and SC-PWC403C_M-SBLH, please contact Mitsubishi Electric System & Service Co., Ltd. OVERSEAS SERVICE SECTION. (Email: osb.webmaster@melsc.jp)
9. This size is applicable for wiring length of 10 m or shorter. For over 10 m, extend the wires with HIV wires of 1.25 mm² (AWG 16).

Selection Example in HIV Wires for Servo Motors

G G-HS B B-RJ A A-RJ

The following are examples of wire sizes when 600 V grade heat-resistant polyvinyl chloride insulated wires (HIV wires) with a length of 30 m are used.
Refer to "Rotary Servo Motor User's Manual (For MR-J5)" when using cab-tire cables for supplying power (U/V/W) to HK-JT series.

Rotary servo motor model		Wire size [mm^2]		
		For power and grounding (U/V/W/E)	For electromagnetic brake (B1/B2)	For cooling fan (BU/BV/BW)
HK-JT_J	HK-JT701MJ	8 (AWG 8)	1.25 (AWG 16)	-
	HK-JT11K1MJ	14 (AWG 6)		
	HK-JT15K1MJ	22 (AWG 4)		
	HK-JT15K1J		-	1.25 (AWG 16)
	HK-JT22K1MJ	38 (AWG 2)		
HK-JT_4J	HK-JT701M4J	5.5 (AWG 10)	1.25 (AWG 16)	-
	HK-JT11K1M4J	8 (AWG 8)		
	HK-JT15K1M4J			
	HK-JT22K1M4J	14 (AWG 6)	-	1.25 (AWG 16)

Selection Example in HIV Wires for Servo Motors

G | G-RJ | WG | B | B-RJ | WB | A | A-RJ

The following are examples of wire sizes when 600 V grade heat-resistant polyvinyl chloride insulated wires (HIV wires) with a length of 30 m are used.

Linear servo motor model Primary side		Wire size [mm²] For power and grounding (U/V/W/E)	For thermistor (G1/G2)
LM-H3P2A-07P-BSS0		1.25 (AWG 16) (Note 1)	0.2 (AWG 24)
LM-H3P3A-12P-CSS0			
LM-H3P3B-24P-CSS0			
LM-H3P3C-36P-CSS0			
LM-H3P3D-48P-CSS0		2 (AWG 14)	
LM-H3P7A-24P-ASS0		1.25 (AWG 16) (Note 1)	
LM-H3P7B-48P-ASS0		2 (AWG 14)	
LM-H3P7C-72P-ASS0			
LM-H3P7D-96P-ASS0		3.5 (AWG 12)	
LM-FP2B-06M-1SS0	Natural cooling	2 (AWG 14)	
	Liquid cooling		
LM-FP2D-12M-1SS0	Natural cooling		
	Liquid cooling	3.5 (AWG 12)	
LM-FP2F-18M-1SS0	Natural cooling	2 (AWG 14)	
	Liquid cooling	3.5 (AWG 12) (Note 3)	
LM-FP4B-12M-1SS0	Natural cooling	5.5 (AWG 10)	
	Liquid cooling		
LM-FP4D-24M-1SS0	Natural cooling		
	Liquid cooling		
LM-K2P1A-01M-2SS1		1.25 (AWG 16) (Note 1)	
LM-K2P1C-03M-2SS1		2 (AWG 14)	
LM-K2P2A-02M-1SS1		1.25 (AWG 16) (Note 1)	
LM-K2P2C-07M-1SS1		3.5 (AWG 12)	
LM-K2P2E-12M-1SS1		5.5 (AWG 10)	
LM-K2P3C-14M-1SS1		3.5 (AWG 12)	
LM-K2P3E-24M-1SS1		5.5 (AWG 10)	
LM-U2PAB-05M-0SS0, LM-U2PAD-10M-0SS0, LM-U2PAF-15M-0SS0, LM-U2PBB-07M-1SS0, LM-U2PBD-15M-1SS0, LM-U2PBF-22M-1SS0		1.25 (AWG 16) (Note 1)	
LM-U2P2B-40M-2SS0		2 (AWG 14)	
LM-U2P2C-60M-2SS0		3.5 (AWG 12)	
LM-U2P2D-80M-2SS0		5.5 (AWG 10)	

Linear servo motor model Primary side	Wire size [mm²] For power and grounding (U/V/W/E)	For thermal protector
LM-AJP1B-07K-JSS0, LM-AJP1D-14K-JSS0, LM-AJP2B-12S-JSS0, LM-AJP2D-23T-JSS0, LM-AJP3B-17N-JSS0, LM-AJP3D-35R-JSS0, LM-AJP4B-22M-JSS0, LM-AJP4D-45N-JSS0	1.25 (AWG 16) (Note 1)	0.2 (AWG 24)
LM-AUP3A-03V-JSS0, LM-AUP3B-06V-JSS0, LM-AUP3C-09V-JSS0, LM-AUP3D-11R-JSS0, LM-AUP4A-04R-JSS0, LM-AUP4B-09R-JSS0, LM-AUP4C-13P-JSS0, LM-AUP4D-18M-JSS0, LM-AUP4F-26P-JSS0, LM-AUP4H-35M-JSS0		

Direct drive motor model	Wire size [mm²] For power and grounding (U/V/W/E)
TM-RG2M002C30, TM-RG2M004E30, TM-RG2M009G30, TM-RU2M002C30, TM-RU2M004E30, TM-RU2M009G30	0.75 (AWG 18) (Note 1, 2)
TM-RFM002C20, TM-RFM004C20, TM-RFM006C20, TM-RFM006E20, TM-RFM012E20, TM-RFM018E20, TM-RFM012G20	1.25 (AWG 16) (Note 1)
TM-RFM048G20, TM-RFM072G20	3.5 (AWG 12)
TM-RFM040J10	1.25 (AWG 16) (Note 1)
TM-RFM120J10	3.5 (AWG 12)
TM-RFM240J10	5.5 (AWG 10)

Notes: 1. The National Electrical Code recommends that the wire size should be a minimum of AWG 14 (2 mm²). Refer to the servo motor User's Manual for details.
2. The same wire size is applicable when the torques are increased.
3. Use a wire which has a heat resistance temperature of 105 °C for wiring to the servo motor power supply.

MEMO

Product List

Servo system controllers

Item		Model	Application	
Motion module		RD78G4	Maximum number of control axes: 4 axes	CC-Link IE TSN master station
		RD78G8	Maximum number of control axes: 8 axes	CC-Link IE TSN master station
		RD78G16	Maximum number of control axes: 16 axes	CC-Link IE TSN master station
		RD78G32	Maximum number of control axes: 32 axes	CC-Link IE TSN master station
		RD78G64	Maximum number of control axes: 64 axes	CC-Link IE TSN master station
		RD78GHV	Maximum number of control axes: 128 axes	CC-Link IE TSN master station
		RD78GHW	Maximum number of control axes: 256 axes	CC-Link IE TSN master station
		FX5-40SSC-G	Maximum number of control axes: 4 axes	CC-Link IE TSN master station
		FX5-80SSC-G	Maximum number of control axes: 8 axes	CC-Link IE TSN master station
Motion Control Software (Note 1)	SWM-G	SW1DNN-SWMG-M	・SWM-G Engine ・SWM-G API ・Network API ・SWM-G Operating Station ・MotionScope ・Real Time OS (RTX64)	CC-Link IE TSN compatible
	SWM-G-N1	SW1DNN-SWMGN1-M	・SWM-G Engine ・SWM-G API ・Network API ・SWM-G Operating Station ・MotionScope ・EcConfigurator ・Real Time OS (RTX64)	CC-Link IE TSN/ EtherCAT® compatible
USB key for Motion Control Software	SWM-G	MR-SWMG16-U	Maximum number of control axes: 16 axes	USB key (license)
		MR-SWMG32-U	Maximum number of control axes: 32 axes	USB key (license)
		MR-SWMG64-U	Maximum number of control axes: 64 axes	USB key (license)
		MR-SWMG128-U	Maximum number of control axes: 128 axes	USB key (license)
	SWM-G-N1	MR-SWMG16N1-U	Maximum number of control axes: 16 axes	USB key (license)
		MR-SWMG32N1-U	Maximum number of control axes: 32 axes	USB key (license)
		MR-SWMG64N1-U	Maximum number of control axes: 64 axes	USB key (license)
		MR-SWMG128N1-U	Maximum number of control axes: 128 axes	USB key (license)
Motion control board		MR-EM441G	Maximum number of control axes: 64 axes	CC-Link IE TSN compatible
MELSOFT EM Motion SDK		SW1DND-EMMSDK-B	・Motion test tool ・MR Configurator2 ・Motion API ・Motion control board device driver	
Simple Motion module (Note 2)		RD77MS2	Maximum number of control axes: 2 axes	SSCNET III/H compatible
		RD77MS4	Maximum number of control axes: 4 axes	SSCNET III/H compatible
		RD77MS8	Maximum number of control axes: 8 axes	SSCNET III/H compatible
		RD77MS16	Maximum number of control axes: 16 axes	SSCNET III/H compatible
		QD77MS2	Maximum number of control axes: 2 axes	SSCNET III/H compatible
		QD77MS4	Maximum number of control axes: 4 axes	SSCNET III/H compatible
		QD77MS16	Maximum number of control axes: 16 axes	SSCNET III/H compatible
Motion controller		R16MTCPU	Maximum number of control axes: 16 axes	SSCNET III/H compatible
		R32MTCPU	Maximum number of control axes: 32 axes	SSCNET III/H compatible
		R64MTCPU	Maximum number of control axes: 64 axes	SSCNET III/H compatible
		Q172DSCPU	Maximum number of control axes: 16 axes	SSCNET III/H compatible
		Q173DSCPU	Maximum number of control axes: 32 axes	SSCNET III/H compatible
		Q170MSCPU	Maximum number of control axes: 16 axes	SSCNET III/H compatible

Notes:

1. Download and install Motion Control Software from Mitsubishi Electric FA global website.
2. Connectors are not included. Please purchase A6CON1, A6CON2, or A6CON4 separately.

Servo amplifiers

Item		Model	Rated output	Main circuit power supply
Servo amplifier MR-J5-G	200 V	MR-J5-10G	0.1 kW	3-phase or 1-phase 200 V AC to 240 V AC 283 V DC to 340 V DC
		MR-J5-20G	0.2 kW	3-phase or 1-phase 200 V AC to 240 V AC 283 V DC to 340 V DC
		MR-J5-40G	0.4 kW	3-phase or 1-phase 200 V AC to 240 V AC 283 V DC to 340 V DC
		MR-J5-60G	0.6 kW	3-phase or 1-phase 200 V AC to 240 V AC 283 V DC to 340 V DC
		MR-J5-70G	0.75 kW	3-phase or 1-phase 200 V AC to 240 V AC 283 V DC to 340 V DC
		MR-J5-100G	1 kW	3-phase or 1-phase 200 V AC to 240 V AC 283 V DC to 340 V DC
		MR-J5-200G	2 kW	3-phase or 1-phase 200 V AC to 240 V AC 283 V DC to 340 V DC
		MR-J5-350G	3.5 kW	3-phase 200 V AC to 240 V AC, 283 V DC to 340 V DC
		MR-J5-500G	5 kW	3-phase 200 V AC to 240 V AC, 283 V DC to 340 V DC
		MR-J5-700G	7 kW	3-phase 200 V AC to 240 V AC, 283 V DC to 340 V DC
		MR-J5-12KG	12 kW	3-phase 200 V AC to 240 V AC, 283 V DC to 340 V DC
		MR-J5-17KG	17 kW	3-phase 200 V AC to 240 V AC, 283 V DC to 340 V DC
		MR-J5-25KG	25 kW	3-phase 200 V AC to 240 V AC, 283 V DC to 340 V DC
Servo amplifier MR-J5-G4	400 V	MR-J5-60G4	0.6 kW	3-phase 380 V AC to 480 V AC
		MR-J5-100G4	1 kW	3-phase 380 V AC to 480 V AC
		MR-J5-200G4	2 kW	3-phase 380 V AC to 480 V AC
		MR-J5-350G4	3.5 kW	3-phase 380 V AC to 480 V AC
		MR-J5-500G4	5 kW	3-phase 380 V AC to 480 V AC
		MR-J5-700G4	7 kW	3-phase 380 V AC to 480 V AC
		MR-J5-12KG4	12 kW	3-phase 380 V AC to 480 V AC
		MR-J5-17KG4	17 kW	3-phase 380 V AC to 480 V AC
		MR-J5-25KG4	25 kW	3-phase 380 V AC to 480 V AC
Servo amplifier MR-J5-G-HS	200 V	MR-J5-12KG-HS	12 kW	3-phase 200 V AC to 240 V AC, 283 V DC to 340 V DC
		MR-J5-17KG-HS	17 kW	3-phase 200 V AC to 240 V AC, 283 V DC to 340 V DC
		MR-J5-25KG-HS	25 kW	3-phase 200 V AC to 240 V AC, 283 V DC to 340 V DC
Servo amplifier MR-J5-G4-HS	400 V	MR-J5-60G4-HS	0.6 kW	3-phase 380 V AC to 480 V AC
		MR-J5-100G4-HS	1 kW	3-phase 380 V AC to 480 V AC
		MR-J5-200G4-HS	2 kW	3-phase 380 V AC to 480 V AC
		MR-J5-350G4-HS	3.5 kW	3-phase 380 V AC to 480 V AC
		MR-J5-500G4-HS	5 kW	3-phase 380 V AC to 480 V AC
		MR-J5-700G4-HS	7 kW	3-phase 380 V AC to 480 V AC
		MR-J5-12KG4-HS	12 kW	3-phase 380 V AC to 480 V AC
		MR-J5-17KG4-HS	17 kW	3-phase 380 V AC to 480 V AC
		MR-J5-25KG4-HS	25 kW	3-phase 380 V AC to 480 V AC

Product List

Servo amplifiers

Item		Model	Rated output	Main circuit power supply
Servo amplifier MR-J5-G-RJ	200 V	MR-J5-10G-RJ	0.1 kW	3-phase or 1-phase 200 V AC to 240 V AC 283 V DC to 340 V DC
		MR-J5-20G-RJ	0.2 kW	3-phase or 1-phase 200 V AC to 240 V AC 283 V DC to 340 V DC
		MR-J5-40G-RJ	0.4 kW	3-phase or 1-phase 200 V AC to 240 V AC 283 V DC to 340 V DC
		MR-J5-60G-RJ	0.6 kW	3-phase or 1-phase 200 V AC to 240 V AC 283 V DC to 340 V DC
		MR-J5-70G-RJ	0.75 kW	3-phase or 1-phase 200 V AC to 240 V AC 283 V DC to 340 V DC
		MR-J5-100G-RJ	1 kW	3-phase or 1-phase 200 V AC to 240 V AC 283 V DC to 340 V DC
		MR-J5-200G-RJ	2 kW	3-phase or 1-phase 200 V AC to 240 V AC 283 V DC to 340 V DC
		MR-J5-350G-RJ	3.5 kW	3-phase 200 V AC to 240 V AC, 283 V DC to 340 V DC
		MR-J5-500G-RJ	5 kW	3-phase 200 V AC to 240 V AC, 283 V DC to 340 V DC
		MR-J5-700G-RJ	7 kW	3-phase 200 V AC to 240 V AC, 283 V DC to 340 V DC
Servo amplifier MR-J5-G4-RJ	400 V	MR-J5-60G4-RJ	0.6 kW	3-phase 380 V AC to 480 V AC
		MR-J5-100G4-RJ	1 kW	3-phase 380 V AC to 480 V AC
		MR-J5-200G4-RJ	2 kW	3-phase 380 V AC to 480 V AC
		MR-J5-350G4-RJ	3.5 kW	3-phase 380 V AC to 480 V AC
Servo amplifier MR-J5W2-G	200 V	MR-J5W2-22G	0.2 kW x 2 axes	3-phase or 1-phase 200 V AC to 240 V AC 283 V DC to 340 V DC
		MR-J5W2-44G	0.4 kW x 2 axes	3-phase or 1-phase 200 V AC to 240 V AC 283 V DC to 340 V DC
		MR-J5W2-77G	0.75 kW x 2 axes	3-phase or 1-phase 200 V AC to 240 V AC 283 V DC to 340 V DC
		MR-J5W2-1010G	1 kW x 2 axes	3-phase 200 V AC to 240 V AC 283 V DC to 340 V DC
Servo amplifier MR-J5W3-G	200 V	MR-J5W3-222G	0.2 kW x 3 axes	3-phase or 1-phase 200 V AC to 240 V AC 283 V DC to 340 V DC
		MR-J5W3-444G	0.4 kW x 3 axes	3-phase or 1-phase 200 V AC to 240 V AC 283 V DC to 340 V DC

Servo amplifiers

Item		Model	Rated output	Main circuit power supply
Servo amplifier MR-J5-G-N1	200 V	MR-J5-10G-N1	0.1 kW	3-phase or 1-phase 200 V AC to 240 V AC 283 V DC to 340 V DC
		MR-J5-20G-N1	0.2 kW	3-phase or 1-phase 200 V AC to 240 V AC 283 V DC to 340 V DC
		MR-J5-40G-N1	0.4 kW	3-phase or 1-phase 200 V AC to 240 V AC 283 V DC to 340 V DC
		MR-J5-60G-N1	0.6 kW	3-phase or 1-phase 200 V AC to 240 V AC 283 V DC to 340 V DC
		MR-J5-70G-N1	0.75 kW	3-phase or 1-phase 200 V AC to 240 V AC 283 V DC to 340 V DC
		MR-J5-100G-N1	1 kW	3-phase or 1-phase 200 V AC to 240 V AC 283 V DC to 340 V DC
		MR-J5-200G-N1	2 kW	3-phase or 1-phase 200 V AC to 240 V AC 283 V DC to 340 V DC
		MR-J5-350G-N1	3.5 kW	3-phase 200 V AC to 240 V AC, 283 V DC to 340 V DC
		MR-J5-500G-N1	5 kW	3-phase 200 V AC to 240 V AC, 283 V DC to 340 V DC
		MR-J5-700G-N1	7 kW	3-phase 200 V AC to 240 V AC, 283 V DC to 340 V DC
		MR-J5-12KG-N1	12 kW	3-phase 200 V AC to 240 V AC, 283 V DC to 340 V DC
		MR-J5-17KG-N1	17 kW	3-phase 200 V AC to 240 V AC, 283 V DC to 340 V DC
		MR-J5-25KG-N1	25 kW	3-phase 200 V AC to 240 V AC, 283 V DC to 340 V DC
Servo amplifier MR-J5-G4-N1	400 V	MR-J5-60G4-N1	0.6 kW	3-phase 380 V AC to 480 V AC
		MR-J5-100G4-N1	1 kW	3-phase 380 V AC to 480 V AC
		MR-J5-200G4-N1	2 kW	3-phase 380 V AC to 480 V AC
		MR-J5-350G4-N1	3.5 kW	3-phase 380 V AC to 480 V AC
		MR-J5-500G4-N1	5 kW	3-phase 380 V AC to 480 V AC
		MR-J5-700G4-N1	7 kW	3-phase 380 V AC to 480 V AC
		MR-J5-12KG4-N1	12 kW	3-phase 380 V AC to 480 V AC
		MR-J5-17KG4-N1	17 kW	3-phase 380 V AC to 480 V AC
		MR-J5-25KG4-N1	25 kW	3-phase 380 V AC to 480 V AC
Servo amplifier MR-J5-G-HSN1	200 V	MR-J5-12KG-HSN1	12 kW	3-phase 200 V AC to 240 V AC, 283 V DC to 340 V DC
		MR-J5-17KG-HSN1	17 kW	3-phase 200 V AC to 240 V AC, 283 V DC to 340 V DC
		MR-J5-25KG-HSN1	25 kW	3-phase 200 V AC to 240 V AC, 283 V DC to 340 V DC
Servo amplifier MR-J5-G4-HSN1	400 V	MR-J5-60G4-HSN1	0.6 kW	3-phase 380 V AC to 480 V AC
		MR-J5-100G4-HSN1	1 kW	3-phase 380 V AC to 480 V AC
		MR-J5-200G4-HSN1	2 kW	3-phase 380 V AC to 480 V AC
		MR-J5-350G4-HSN1	3.5 kW	3-phase 380 V AC to 480 V AC
		MR-J5-500G4-HSN1	5 kW	3-phase 380 V AC to 480 V AC
		MR-J5-700G4-HSN1	7 kW	3-phase 380 V AC to 480 V AC
		MR-J5-12KG4-HSN1	12 kW	3-phase 380 V AC to 480 V AC
		MR-J5-17KG4-HSN1	17 kW	3-phase 380 V AC to 480 V AC
		MR-J5-25KG4-HSN1	25 kW	3-phase 380 V AC to 480 V AC

Product List

Servo amplifiers

Item		Model	Rated output	Main circuit power supply
Servo amplifier MR-J5-G-RJN1	200 V	MR-J5-10G-RJN1	0.1 kW	3-phase or 1-phase 200 V AC to 240 V AC 283 V DC to 340 V DC
		MR-J5-20G-RJN1	0.2 kW	3-phase or 1-phase 200 V AC to 240 V AC 283 V DC to 340 V DC
		MR-J5-40G-RJN1	0.4 kW	3-phase or 1-phase 200 V AC to 240 V AC 283 V DC to 340 V DC
		MR-J5-60G-RJN1	0.6 kW	3-phase or 1-phase 200 V AC to 240 V AC 283 V DC to 340 V DC
		MR-J5-70G-RJN1	0.75 kW	3-phase or 1-phase 200 V AC to 240 V AC 283 V DC to 340 V DC
		MR-J5-100G-RJN1	1 kW	3-phase or 1-phase 200 V AC to 240 V AC 283 V DC to 340 V DC
		MR-J5-200G-RJN1	2 kW	3-phase or 1-phase 200 V AC to 240 V AC 283 V DC to 340 V DC
		MR-J5-350G-RJN1	3.5 kW	3-phase 200 V AC to 240 V AC, 283 V DC to 340 V DC
		MR-J5-500G-RJN1	5 kW	3-phase 200 V AC to 240 V AC, 283 V DC to 340 V DC
		MR-J5-700G-RJN1	7 kW	3-phase 200 V AC to 240 V AC, 283 V DC to 340 V DC
Servo amplifier MR-J5-G4-RJN1	400 V	MR-J5-60G4-RJN1	0.6 kW	3-phase 380 V AC to 480 V AC
		MR-J5-100G4-RJN1	1 kW	3-phase 380 V AC to 480 V AC
		MR-J5-200G4-RJN1	2 kW	3-phase 380 V AC to 480 V AC
		MR-J5-350G4-RJN1	3.5 kW	3-phase 380 V AC to 480 V AC
Servo amplifier MR-J5W2-G-N1	200 V	MR-J5W2-22G-N1	0.2 kW x 2 axes	3-phase or 1-phase 200 V AC to 240 V AC 283 V DC to 340 V DC
		MR-J5W2-44G-N1	0.4 kW x 2 axes	3-phase or 1-phase 200 V AC to 240 V AC 283 V DC to 340 V DC
		MR-J5W2-77G-N1	0.75 kW x 2 axes	3-phase or 1-phase 200 V AC to 240 V AC 283 V DC to 340 V DC
		MR-J5W2-1010G-N1	1 kW x 2 axes	3-phase 200 V AC to 240 V AC 283 V DC to 340 V DC
Servo amplifier MR-J5W3-G-N1	200 V	MR-J5W3-222G-N1	0.2 kW x 3 axes	3-phase or 1-phase 200 V AC to 240 V AC 283 V DC to 340 V DC
		MR-J5W3-444G-N1	0.4 kW x 3 axes	3-phase or 1-phase 200 V AC to 240 V AC 283 V DC to 340 V DC

Drive units

Item		Model	Rated output	Main circuit power supply
Drive unit MR-J5D1-G4	400 V	MR-J5D1-100G4	1 kW	Main circuit power is supplied from the power regeneration converter unit to the drive unit.
		MR-J5D1-200G4	2 kW	
		MR-J5D1-350G4	3.5 kW	
		MR-J5D1-500G4	5 kW	
		MR-J5D1-700G4	7 kW	
Drive unit MR-J5D2-G4	400 V	MR-J5D2-100G4	1 kW x 2 axes	Main circuit power is supplied from the power regeneration converter unit to the drive unit.
		MR-J5D2-200G4	2 kW x 2 axes	
		MR-J5D2-350G4	3.5 kW x 2 axes	
		MR-J5D2-500G4	5 kW x 2 axes	
		MR-J5D2-700G4	7 kW x 2 axes	
Drive unit MR-J5D3-G4	400 V	MR-J5D3-100G4	1 kW x 3 axes	Main circuit power is supplied from the power regeneration converter unit to the drive unit.
		MR-J5D3-200G4	2 kW x 3 axes	
Drive unit MR-J5D1-G4-N1	400 V	MR-J5D1-100G4-N1	1 kW	Main circuit power is supplied from the power regeneration converter unit to the drive unit.
		MR-J5D1-200G4-N1	2 kW	
		MR-J5D1-350G4-N1	3.5 kW	
		MR-J5D1-500G4-N1	5 kW	
		MR-J5D1-700G4-N1	7 kW	
Drive unit MR-J5D2-G4-N1	400 V	MR-J5D2-100G4-N1	1 kW x 2 axes	Main circuit power is supplied from the power regeneration converter unit to the drive unit.
		MR-J5D2-200G4-N1	2 kW x 2 axes	
		MR-J5D2-350G4-N1	3.5 kW x 2 axes	
		MR-J5D2-500G4-N1	5 kW x 2 axes	
		MR-J5D2-700G4-N1	7 kW x 2 axes	
Drive unit MR-J5D3-G4-N1	400 V	MR-J5D3-100G4-N1	1 kW x 3 axes	Main circuit power is supplied from the power regeneration converter unit to the drive unit.
		MR-J5D3-200G4-N1	2 kW x 3 axes	

Servo amplifiers

Item		Model	Rated output	Main circuit power supply
Servo amplifier MR-J5-B	200 V	MR-J5-10B	0.1 kW	3-phase or 1-phase 200 V AC to 240 V AC 283 V DC to 340 V DC
		MR-J5-20B	0.2 kW	3-phase or 1-phase 200 V AC to 240 V AC 283 V DC to 340 V DC
		MR-J5-40B	0.4 kW	3-phase or 1-phase 200 V AC to 240 V AC 283 V DC to 340 V DC
		MR-J5-60B	0.6 kW	3-phase or 1-phase 200 V AC to 240 V AC 283 V DC to 340 V DC
		MR-J5-70B	0.75 kW	3-phase or 1-phase 200 V AC to 240 V AC 283 V DC to 340 V DC
		MR-J5-100B	1 kW	3-phase or 1-phase 200 V AC to 240 V AC 283 V DC to 340 V DC
		MR-J5-200B	2 kW	3-phase or 1-phase 200 V AC to 240 V AC 283 V DC to 340 V DC
		MR-J5-350B	3.5 kW	3-phase 200 V AC to 240 V AC, 283 V DC to 340 V DC
		MR-J5-500B	5 kW	3-phase 200 V AC to 240 V AC, 283 V DC to 340 V DC
		MR-J5-700B	7 kW	3-phase 200 V AC to 240 V AC, 283 V DC to 340 V DC
		MR-J5-12KB	12 kW	3-phase 200 V AC to 240 V AC, 283 V DC to 340 V DC
		MR-J5-17KB	17 kW	3-phase 200 V AC to 240 V AC, 283 V DC to 340 V DC
		MR-J5-25KB	25 kW	3-phase 200 V AC to 240 V AC, 283 V DC to 340 V DC
Servo amplifier MR-J5-B4	400 V	MR-J5-60B4	0.6 kW	3-phase 380 V AC to 480 V AC
		MR-J5-100B4	1 kW	3-phase 380 V AC to 480 V AC
		MR-J5-200B4	2 kW	3-phase 380 V AC to 480 V AC
		MR-J5-350B4	3.5 kW	3-phase 380 V AC to 480 V AC
		MR-J5-500B4	5 kW	3-phase 380 V AC to 480 V AC
		MR-J5-700B4	7 kW	3-phase 380 V AC to 480 V AC
		MR-J5-12KB4	12 kW	3-phase 380 V AC to 480 V AC
		MR-J5-17KB4	17 kW	3-phase 380 V AC to 480 V AC
		MR-J5-25KB4	25 kW	3-phase 380 V AC to 480 V AC
Servo amplifier MR-J5-B-RJ	200 V	MR-J5-10B-RJ	0.1 kW	3-phase or 1-phase 200 V AC to 240 V AC 283 V DC to 340 V DC
		MR-J5-20B-RJ	0.2 kW	3-phase or 1-phase 200 V AC to 240 V AC 283 V DC to 340 V DC
		MR-J5-40B-RJ	0.4 kW	3-phase or 1-phase 200 V AC to 240 V AC 283 V DC to 340 V DC
		MR-J5-60B-RJ	0.6 kW	3-phase or 1-phase 200 V AC to 240 V AC 283 V DC to 340 V DC
		MR-J5-70B-RJ	0.75 kW	3-phase or 1-phase 200 V AC to 240 V AC 283 V DC to 340 V DC
		MR-J5-100B-RJ	1 kW	3-phase or 1-phase 200 V AC to 240 V AC 283 V DC to 340 V DC
		MR-J5-200B-RJ	2 kW	3-phase or 1-phase 200 V AC to 240 V AC 283 V DC to 340 V DC
		MR-J5-350B-RJ	3.5 kW	3-phase 200 V AC to 240 V AC, 283 V DC to 340 V DC
		MR-J5-500B-RJ	5 kW	3-phase 200 V AC to 240 V AC, 283 V DC to 340 V DC
		MR-J5-700B-RJ	7 kW	3-phase 200 V AC to 240 V AC, 283 V DC to 340 V DC
		MR-J5-12KB-RJ	12 kW	3-phase 200 V AC to 240 V AC, 283 V DC to 340 V DC
		MR-J5-17KB-RJ	17 kW	3-phase 200 V AC to 240 V AC, 283 V DC to 340 V DC
		MR-J5-25KB-RJ	25 kW	3-phase 200 V AC to 240 V AC, 283 V DC to 340 V DC
Servo amplifier MR-J5-B4-RJ	400 V	MR-J5-60B4-RJ	0.6 kW	3-phase 380 V AC to 480 V AC
		MR-J5-100B4-RJ	1 kW	3-phase 380 V AC to 480 V AC
		MR-J5-200B4-RJ	2 kW	3-phase 380 V AC to 480 V AC
		MR-J5-350B4-RJ	3.5 kW	3-phase 380 V AC to 480 V AC
		MR-J5-500B4-RJ	5 kW	3-phase 380 V AC to 480 V AC
		MR-J5-700B4-RJ	7 kW	3-phase 380 V AC to 480 V AC
		MR-J5-12KB4-RJ	12 kW	3-phase 380 V AC to 480 V AC
		MR-J5-17KB4-RJ	17 kW	3-phase 380 V AC to 480 V AC
		MR-J5-25KB4-RJ	25 kW	3-phase 380 V AC to 480 V AC

Servo amplifiers

Item		Model	Rated output	Main circuit power supply
Servo amplifier MR-J5W2-B	200 V	MR-J5W2-22B	0.2 kW x 2 axes	3-phase or 1-phase 200 V AC to 240 V AC 283 V DC to 340 V DC
		MR-J5W2-44B	0.4 kW x 2 axes	3-phase or 1-phase 200 V AC to 240 V AC 283 V DC to 340 V DC
		MR-J5W2-77B	0.75 kW x 2 axes	3-phase or 1-phase 200 V AC to 240 V AC 283 V DC to 340 V DC
		MR-J5W2-1010B	1 kW x 2 axes	3-phase 200 V AC to 240 V AC 283 V DC to 340 V DC
Servo amplifier MR-J5W3-B	200 V	MR-J5W3-222B	0.2 kW x 3 axes	3-phase or 1-phase 200 V AC to 240 V AC 283 V DC to 340 V DC
		MR-J5W3-444B	0.4 kW x 3 axes	3-phase or 1-phase 200 V AC to 240 V AC 283 V DC to 340 V DC
Servo amplifier MR-J5-A	200 V	MR-J5-10A	0.1 kW	3-phase or 1-phase 200 V AC to 240 V AC 283 V DC to 340 V DC
		MR-J5-20A	0.2 kW	3-phase or 1-phase 200 V AC to 240 V AC 283 V DC to 340 V DC
		MR-J5-40A	0.4 kW	3-phase or 1-phase 200 V AC to 240 V AC 283 V DC to 340 V DC
		MR-J5-60A	0.6 kW	3-phase or 1-phase 200 V AC to 240 V AC 283 V DC to 340 V DC
		MR-J5-70A	0.75 kW	3-phase or 1-phase 200 V AC to 240 V AC 283 V DC to 340 V DC
		MR-J5-100A	1 kW	3-phase or 1-phase 200 V AC to 240 V AC 283 V DC to 340 V DC
		MR-J5-200A	2 kW	3-phase or 1-phase 200 V AC to 240 V AC 283 V DC to 340 V DC
		MR-J5-350A	3.5 kW	3-phase 200 V AC to 240 V AC, 283 V DC to 340 V DC
		MR-J5-500A	5 kW	3-phase 200 V AC to 240 V AC, 283 V DC to 340 V DC
		MR-J5-700A	7 kW	3-phase 200 V AC to 240 V AC, 283 V DC to 340 V DC
		MR-J5-12KA	12 kW	3-phase 200 V AC to 240 V AC, 283 V DC to 340 V DC
		MR-J5-17KA	17 kW	3-phase 200 V AC to 240 V AC, 283 V DC to 340 V DC
		MR-J5-25KA	25 kW	3-phase 200 V AC to 240 V AC, 283 V DC to 340 V DC
Servo amplifier MR-J5-A4	400 V	MR-J5-60A4	0.6 kW	3-phase 380 V AC to 480 V AC
		MR-J5-100A4	1 kW	3-phase 380 V AC to 480 V AC
		MR-J5-200A4	2 kW	3-phase 380 V AC to 480 V AC
		MR-J5-350A4	3.5 kW	3-phase 380 V AC to 480 V AC
		MR-J5-500A4	5 kW	3-phase 380 V AC to 480 V AC
		MR-J5-700A4	7 kW	3-phase 380 V AC to 480 V AC
		MR-J5-12KA4	12 kW	3-phase 380 V AC to 480 V AC
		MR-J5-17KA4	17 kW	3-phase 380 V AC to 480 V AC
		MR-J5-25KA4	25 kW	3-phase 380 V AC to 480 V AC

Product List

Servo amplifiers

Item		Model	Rated output	Main circuit power supply
Servo amplifier MR-J5-A-RJ	200 V	MR-J5-10A-RJ	0.1 kW	3-phase or 1-phase 200 V AC to 240 V AC 283 V DC to 340 V DC
		MR-J5-20A-RJ	0.2 kW	3-phase or 1-phase 200 V AC to 240 V AC 283 V DC to 340 V DC
		MR-J5-40A-RJ	0.4 kW	3-phase or 1-phase 200 V AC to 240 V AC 283 V DC to 340 V DC
		MR-J5-60A-RJ	0.6 kW	3-phase or 1-phase 200 V AC to 240 V AC 283 V DC to 340 V DC
		MR-J5-70A-RJ	0.75 kW	3-phase or 1-phase 200 V AC to 240 V AC 283 V DC to 340 V DC
		MR-J5-100A-RJ	1 kW	3-phase or 1-phase 200 V AC to 240 V AC 283 V DC to 340 V DC
		MR-J5-200A-RJ	2 kW	3-phase or 1-phase 200 V AC to 240 V AC 283 V DC to 340 V DC
		MR-J5-350A-RJ	3.5 kW	3-phase 200 V AC to 240 V AC, 283 V DC to 340 V DC
		MR-J5-500A-RJ	5 kW	3-phase 200 V AC to 240 V AC, 283 V DC to 340 V DC
		MR-J5-700A-RJ	7 kW	3-phase 200 V AC to 240 V AC, 283 V DC to 340 V DC
		MR-J5-12KA-RJ	12 kW	3-phase 200 V AC to 240 V AC, 283 V DC to 340 V DC
		MR-J5-17KA-RJ	17 kW	3-phase 200 V AC to 240 V AC, 283 V DC to 340 V DC
		MR-J5-25KA-RJ	25 kW	3-phase 200 V AC to 240 V AC, 283 V DC to 340 V DC
Servo amplifier MR-J5-A4-RJ	400 V	MR-J5-60A4-RJ	0.6 kW	3-phase 380 V AC to 480 V AC
		MR-J5-100A4-RJ	1 kW	3-phase 380 V AC to 480 V AC
		MR-J5-200A4-RJ	2 kW	3-phase 380 V AC to 480 V AC
		MR-J5-350A4-RJ	3.5 kW	3-phase 380 V AC to 480 V AC
		MR-J5-500A4-RJ	5 kW	3-phase 380 V AC to 480 V AC
		MR-J5-700A4-RJ	7 kW	3-phase 380 V AC to 480 V AC
		MR-J5-12KA4-RJ	12 kW	3-phase 380 V AC to 480 V AC
		MR-J5-17KA4-RJ	17 kW	3-phase 380 V AC to 480 V AC
		MR-J5-25KA4-RJ	25 kW	3-phase 380 V AC to 480 V AC

Converter units

Item		Model	Rated output	Main circuit power supply
Simple converter MR-CM	200 V	MR-CM3K	3 kW	3-phase 200 V AC to 240 V AC
Power regeneration converter unit MR-CV	400 V	MR-CV11K4	11 kW	3-phase 380 V AC to 480 V AC
		MR-CV18K4	18 kW	3-phase 380 V AC to 480 V AC
		MR-CV30K4	30 kW	3-phase 380 V AC to 480 V AC
		MR-CV37K4	37 kW	3-phase 380 V AC to 480 V AC
		MR-CV45K4	45 kW	3-phase 380 V AC to 480 V AC
		MR-CV55K4	55 kW	3-phase 380 V AC to 480 V AC
		MR-CV75K4	75 kW	3-phase 380 V AC to 480 V AC

Rotary servo motors

Item		Flange size [mm]	Model	Rated output	Rated speed
HK-KT series B: With an electromagnetic brake	HK-KT_W	40 x 40	HK-KT053W(B)	0.05 kW	3000 r/min
			HK-KT13W(B)	0.1 kW	3000 r/min
			HK-KT1M3W(B)	0.15 kW	3000 r/min
		60 x 60	HK-KT13UW(B)	0.1 kW	3000 r/min
			HK-KT23W(B)	0.2 kW	3000 r/min
			HK-KT43W(B)	0.4 kW	3000 r/min
			HK-KT63W(B)	0.6 kW	3000 r/min
		80 x 80	HK-KT23UW(B)	0.2 kW	3000 r/min
			HK-KT43UW(B)	0.4 kW	3000 r/min
			HK-KT7M3W(B)	0.75 kW	3000 r/min
			HK-KT103W(B)	1.0 kW	3000 r/min
		90 x 90	HK-KT63UW(B)	0.6 kW	3000 r/min
			HK-KT7M3UW(B)	0.75 kW	3000 r/min
			HK-KT103UW(B)	1.0 kW	3000 r/min
			HK-KT153W(B)	1.5 kW	3000 r/min
			HK-KT203W(B)	2.0 kW	3000 r/min
			HK-KT202W(B)	2.0 kW	2000 r/min
	HK-KT_4_W	60 x 60	HK-KT434W(B)	0.4 kW	3000 r/min
			HK-KT634W(B)	0.6 kW	3000 r/min
		80 x 80	HK-KT7M34W(B)	0.75 kW	3000 r/min
			HK-KT1034W(B)	1.0 kW	3000 r/min
		90 x 90	HK-KT634UW(B)	0.6 kW	3000 r/min
			HK-KT1034UW(B)	1.0 kW	3000 r/min
			HK-KT1534W(B)	1.5 kW	3000 r/min
			HK-KT2034W(B)	2.0 kW	3000 r/min
			HK-KT2024W(B)	2.0 kW	2000 r/min
Servo motors with functional safety HK-KT series B: With an electromagnetic brake	HK-KT_W_WS	40 x 40	HK-KT053W(B)WS	0.05 kW	3000 r/min
			HK-KT13W(B)WS	0.1 kW	3000 r/min
			HK-KT1M3W(B)WS	0.15 kW	3000 r/min
		60 x 60	HK-KT13UW(B)WS	0.1 kW	3000 r/min
			HK-KT23W(B)WS	0.2 kW	3000 r/min
			HK-KT43W(B)WS	0.4 kW	3000 r/min
			HK-KT63W(B)WS	0.6 kW	3000 r/min
		80 x 80	HK-KT23UW(B)WS	0.2 kW	3000 r/min
			HK-KT43UW(B)WS	0.4 kW	3000 r/min
			HK-KT7M3W(B)WS	0.75 kW	3000 r/min
			HK-KT103W(B)WS	1.0 kW	3000 r/min
		90 x 90	HK-KT63UW(B)WS	0.6 kW	3000 r/min
			HK-KT7M3UW(B)WS	0.75 kW	3000 r/min
			HK-KT103UW(B)WS	1.0 kW	3000 r/min
			HK-KT153W(B)WS	1.5 kW	3000 r/min
			HK-KT203W(B)WS	2.0 kW	3000 r/min
			HK-KT202W(B)WS	2.0 kW	2000 r/min
	HK-KT_4_W_WS	60 x 60	HK-KT434W(B)WS	0.4 kW	3000 r/min
			HK-KT634W(B)WS	0.6 kW	3000 r/min
		80 x 80	HK-KT7M34W(B)WS	0.75 kW	3000 r/min
			HK-KT1034W(B)WS	1.0 kW	3000 r/min
		90 x 90	HK-KT634UW(B)WS	0.6 kW	3000 r/min
			HK-KT1034UW(B)WS	1.0 kW	3000 r/min
			HK-KT1534W(B)WS	1.5 kW	3000 r/min
			HK-KT2034W(B)WS	2.0 kW	3000 r/min
			HK-KT2024W(B)WS	2.0 kW	2000 r/min

Product List

Rotary servo motors

Item		Model		Rated output	Rated speed	Reduction ratio
HK-KT series With a gear reducer for general industrial machines B: With an electromagnetic brake	HK-KT_G_	HK-KT053(B)G1	1/5	0.05 kW	3000 r/min	1/5
		HK-KT053(B)G1	1/12	0.05 kW	3000 r/min	1/12
		HK-KT053(B)G1	1/20	0.05 kW	3000 r/min	1/20
		HK-KT13(B)G1	1/5	0.1 kW	3000 r/min	1/5
		HK-KT13(B)G1	1/12	0.1 kW	3000 r/min	1/12
		HK-KT13(B)G1	1/20	0.1 kW	3000 r/min	1/20
		HK-KT23(B)G1	1/5	0.2 kW	3000 r/min	1/5
		HK-KT23(B)G1	1/12	0.2 kW	3000 r/min	1/12
		HK-KT23(B)G1	1/20	0.2 kW	3000 r/min	1/20
		HK-KT43(B)G1	1/5	0.4 kW	3000 r/min	1/5
		HK-KT43(B)G1	1/12	0.4 kW	3000 r/min	1/12
		HK-KT43(B)G1	1/20	0.4 kW	3000 r/min	1/20
		HK-KT7M3(B)G1	1/5	0.75 kW	3000 r/min	1/5
		HK-KT7M3(B)G1	1/12	0.75 kW	3000 r/min	1/12
		HK-KT7M3(B)G1	1/20	0.75 kW	3000 r/min	1/20
HK-KT series With a flange-output type gear reducer for high precision applications, flange mounting B: With an electromagnetic brake	HK-KT_G_	HK-KT053(B)G5	1/5 (40 x 40)	0.05 kW	3000 r/min	1/5 (flange dimensions: 40 mm x 40 mm)
		HK-KT053(B)G5	1/5 (60 x 60)	0.05 kW	3000 r/min	1/5 (flange dimensions: 60 mm x 60 mm)
		HK-KT053(B)G5	1/9	0.05 kW	3000 r/min	1/9
		HK-KT053(B)G5	1/11	0.05 kW	3000 r/min	1/11
		HK-KT053(B)G5	1/21	0.05 kW	3000 r/min	1/21
		HK-KT053(B)G5	1/33	0.05 kW	3000 r/min	1/33
		HK-KT053(B)G5	1/45	0.05 kW	3000 r/min	1/45
		HK-KT13(B)G5	1/5 (40 x 40)	0.1 kW	3000 r/min	1/5 (flange dimensions: 40 mm x 40 mm)
		HK-KT13(B)G5	1/5 (60 x 60)	0.1 kW	3000 r/min	1/5 (flange dimensions: 60 mm x 60 mm)
		HK-KT13(B)G5	1/11	0.1 kW	3000 r/min	1/11
		HK-KT13(B)G5	1/21	0.1 kW	3000 r/min	1/21
		HK-KT13(B)G5	1/33	0.1 kW	3000 r/min	1/33
		HK-KT13(B)G5	1/45	0.1 kW	3000 r/min	1/45
		HK-KT23(B)G5	1/5	0.2 kW	3000 r/min	1/5
		HK-KT23(B)G5	1/11	0.2 kW	3000 r/min	1/11
		HK-KT23(B)G5	1/21	0.2 kW	3000 r/min	1/21
		HK-KT23(B)G5	1/33	0.2 kW	3000 r/min	1/33
		HK-KT23(B)G5	1/45	0.2 kW	3000 r/min	1/45
		HK-KT43(B)G5	1/5	0.4 kW	3000 r/min	1/5
		HK-KT43(B)G5	1/11	0.4 kW	3000 r/min	1/11
		HK-KT43(B)G5	1/21	0.4 kW	3000 r/min	1/21
		HK-KT43(B)G5	1/33	0.4 kW	3000 r/min	1/33
		HK-KT43(B)G5	1/45	0.4 kW	3000 r/min	1/45
		HK-KT7M3(B)G5	1/5	0.75 kW	3000 r/min	1/5
		HK-KT7M3(B)G5	1/11	0.75 kW	3000 r/min	1/11
		HK-KT7M3(B)G5	1/21	0.75 kW	3000 r/min	1/21
		HK-KT7M3(B)G5	1/33	0.75 kW	3000 r/min	1/33
		HK-KT7M3(B)G5	1/45	0.75 kW	3000 r/min	1/45

Rotary servo motors

Item		Model		Rated output	Rated speed	Reduction ratio
HK-KT series With a shaft-output type gear reducer for high precision applications, flange mounting B: With an electromagnetic brake	HK-KT_G_	HK-KT053(B)G7	1/5 (40 x 40)	0.05 kW	3000 r/min	1/5 (flange dimensions: 40 mm x 40 mm)
		HK-KT053(B)G7	1/5 (60 x 60)	0.05 kW	3000 r/min	1/5 (flange dimensions: 60 mm x 60 mm)
		HK-KT053(B)G7	1/9	0.05 kW	3000 r/min	1/9
		HK-KT053(B)G7	1/11	0.05 kW	3000 r/min	1/11
		HK-KT053(B)G7	1/21	0.05 kW	3000 r/min	1/21
		HK-KT053(B)G7	1/33	0.05 kW	3000 r/min	1/33
		HK-KT053(B)G7	1/45	0.05 kW	3000 r/min	1/45
		HK-KT13(B)G7	1/5 (40 x 40)	0.1 kW	3000 r/min	1/5 (flange dimensions: 40 mm x 40 mm)
		HK-KT13(B)G7	1/5 (60 x 60)	0.1 kW	3000 r/min	1/5 (flange dimensions: 60 mm x 60 mm)
		HK-KT13(B)G7	1/11	0.1 kW	3000 r/min	1/11
		HK-KT13(B)G7	1/21	0.1 kW	3000 r/min	1/21
		HK-KT13(B)G7	1/33	0.1 kW	3000 r/min	1/33
		HK-KT13(B)G7	1/45	0.1 kW	3000 r/min	1/45
		HK-KT23(B)G7	1/5	0.2 kW	3000 r/min	1/5
		HK-KT23(B)G7	1/11	0.2 kW	3000 r/min	1/11
		HK-KT23(B)G7	1/21	0.2 kW	3000 r/min	1/21
		HK-KT23(B)G7	1/33	0.2 kW	3000 r/min	1/33
		HK-KT23(B)G7	1/45	0.2 kW	3000 r/min	1/45
		HK-KT43(B)G7	1/5	0.4 kW	3000 r/min	1/5
		HK-KT43(B)G7	1/11	0.4 kW	3000 r/min	1/11
		HK-KT43(B)G7	1/21	0.4 kW	3000 r/min	1/21
		HK-KT43(B)G7	1/33	0.4 kW	3000 r/min	1/33
		HK-KT43(B)G7	1/45	0.4 kW	3000 r/min	1/45
		HK-KT7M3(B)G7	1/5	0.75 kW	3000 r/min	1/5
		HK-KT7M3(B)G7	1/11	0.75 kW	3000 r/min	1/11
		HK-KT7M3(B)G7	1/21	0.75 kW	3000 r/min	1/21
		HK-KT7M3(B)G7	1/33	0.75 kW	3000 r/min	1/33
		HK-KT7M3(B)G7	1/45	0.75 kW	3000 r/min	1/45

Product List

Rotary servo motors

Item		Flange size [mm]	Model	Rated output	Rated speed
HK-MT series B: With an electromagnetic brake	HK-MT_W	40 x 40	HK-MT053W(B)	0.05 kW	3000 r/min
			HK-MT13W(B)	0.1 kW	3000 r/min
			HK-MT1M3W(B)	0.15 kW	3000 r/min
		60 x 60	HK-MT23W(B)	0.2 kW	3000 r/min
			HK-MT43W(B)	0.4 kW	3000 r/min
			HK-MT63W(B)	0.6 kW	3000 r/min
		80 x 80	HK-MT7M3W(B)	0.75 kW	3000 r/min
			HK-MT103W(B)	1.0 kW	3000 r/min
	HK-MT_VW	40 x 40	HK-MT053VW(B)	0.05 kW	3000 r/min
			HK-MT13VW(B)	0.1 kW	3000 r/min
			HK-MT1M3VW(B)	0.15 kW	3000 r/min
		60 x 60	HK-MT23VW(B)	0.2 kW	3000 r/min
			HK-MT43VW(B)	0.4 kW	3000 r/min
			HK-MT63VW(B)	0.6 kW	3000 r/min
		80 x 80	HK-MT7M3VW(B)	0.75 kW	3000 r/min
			HK-MT103VW(B)	1.0 kW	3000 r/min
Servo motors with functional safety HK-MT series B: With an electromagnetic brake	HK-MT_W_WS	40 x 40	HK-MT053W(B)WS	0.05 kW	3000 r/min
			HK-MT13W(B)WS	0.1 kW	3000 r/min
			HK-MT1M3W(B)WS	0.15 kW	3000 r/min
		60 x 60	HK-MT23W(B)WS	0.2 kW	3000 r/min
			HK-MT43W(B)WS	0.4 kW	3000 r/min
			HK-MT63W(B)WS	0.6 kW	3000 r/min
		80 x 80	HK-MT7M3W(B)WS	0.75 kW	3000 r/min
			HK-MT103W(B)WS	1.0 kW	3000 r/min
	HK-MT_VW_WS	40 x 40	HK-MT053VW(B)WS	0.05 kW	3000 r/min
			HK-MT13VW(B)WS	0.1 kW	3000 r/min
			HK-MT1M3VW(B)WS	0.15 kW	3000 r/min
		60 x 60	HK-MT23VW(B)WS	0.2 kW	3000 r/min
			HK-MT43VW(B)WS	0.4 kW	3000 r/min
			HK-MT63VW(B)WS	0.6 kW	3000 r/min
		80 x 80	HK-MT7M3VW(B)WS	0.75 kW	3000 r/min
			HK-MT103VW(B)WS	1.0 kW	3000 r/min

Rotary servo motors

Item		Flange size [mm]	Model	Rated output	Rated speed
HK-ST series B: With an electromagnetic brake	HK-ST_W	130 x 130	HK-ST52W(B)	0.5 kW	2000 r/min
			HK-ST102W(B)	1.0 kW	2000 r/min
			HK-ST172W(B)	1.75 kW	2000 r/min
			HK-ST202AW(B)	2.0 kW	2000 r/min
			HK-ST302W(B)	3.0 kW	2000 r/min
			HK-ST353W(B)	3.5 kW	3000 r/min
			HK-ST503W(B)	5.0 kW	3000 r/min
		176 x 176	HK-ST7M2UW(B)	0.75 kW	2000 r/min
			HK-ST172UW(B)	1.75 kW	2000 r/min
			HK-ST202W(B)	2.0 kW	2000 r/min
			HK-ST352W(B)	3.5 kW	2000 r/min
			HK-ST502W(B)	5.0 kW	2000 r/min
			HK-ST702W(B)	7.0 kW	2000 r/min
	HK-ST_4_W	130 x 130	HK-ST524W(B)	0.5 kW	2000 r/min
			HK-ST1024W(B)	1.0 kW	2000 r/min
			HK-ST1724W(B)	1.75 kW	2000 r/min
			HK-ST2024AW(B)	2.0 kW	2000 r/min
			HK-ST3024W(B)	3.0 kW	2000 r/min
			HK-ST3534W(B)	3.5 kW	3000 r/min
			HK-ST5034W(B)	5.0 kW	3000 r/min
		176 x 176	HK-ST2024W(B)	2.0 kW	2000 r/min
			HK-ST3524W(B)	3.5 kW	2000 r/min
			HK-ST5024W(B)	5.0 kW	2000 r/min
			HK-ST7024W(B)	7.0 kW	2000 r/min
Servo motors with functional safety HK-ST series B: With an electromagnetic brake	HK-ST_W_WS	130 x 130	HK-ST52W(B)WS	0.5 kW	2000 r/min
			HK-ST102W(B)WS	1.0 kW	2000 r/min
			HK-ST172W(B)WS	1.75 kW	2000 r/min
			HK-ST202AW(B)WS	2.0 kW	2000 r/min
			HK-ST302W(B)WS	3.0 kW	2000 r/min
			HK-ST353W(B)WS	3.5 kW	3000 r/min
			HK-ST503W(B)WS	5.0 kW	3000 r/min
		176 x 176	HK-ST7M2UW(B)WS	0.75 kW	2000 r/min
			HK-ST172UW(B)WS	1.75 kW	2000 r/min
			HK-ST202W(B)WS	2.0 kW	2000 r/min
			HK-ST352W(B)WS	3.5 kW	2000 r/min
			HK-ST502W(B)WS	5.0 kW	2000 r/min
			HK-ST702W(B)WS	7.0 kW	2000 r/min
	HK-ST_4_W_WS	130 x 130	HK-ST524W(B)WS	0.5 kW	2000 r/min
			HK-ST1024W(B)WS	1.0 kW	2000 r/min
			HK-ST1724W(B)WS	1.75 kW	2000 r/min
			HK-ST2024AW(B)WS	2.0 kW	2000 r/min
			HK-ST3024W(B)WS	3.0 kW	2000 r/min
			HK-ST3534W(B)WS	3.5 kW	3000 r/min
			HK-ST5034W(B)WS	5.0 kW	3000 r/min
		176 x 176	HK-ST2024W(B)WS	2.0 kW	2000 r/min
			HK-ST3524W(B)WS	3.5 kW	2000 r/min
			HK-ST5024W(B)WS	5.0 kW	2000 r/min
			HK-ST7024W(B)WS	7.0 kW	2000 r/min

Rotary servo motors

Item		Model	Rated output	Rated speed	Reduction ratio
HK-ST series With a gear reducer for general industrial machines B: With an electromagnetic brake G1: Flange mounting G1H: Foot mounting	HK-ST_G_	HK-ST52(B)G1(H) 1/6	0.5 kW	2000 r/min	1/6
		HK-ST52(B)G1(H) 1/11	0.5 kW	2000 r/min	1/11
		HK-ST52(B)G1(H) 1/17	0.5 kW	2000 r/min	1/17
		HK-ST52(B)G1(H) 1/29	0.5 kW	2000 r/min	1/29
		HK-ST52(B)G1(H) 1/35	0.5 kW	2000 r/min	1/35
		HK-ST52(B)G1(H) 1/43	0.5 kW	2000 r/min	1/43
		HK-ST52(B)G1(H) 1/59	0.5 kW	2000 r/min	1/59
		HK-ST102(B)G1(H) 1/6	1.0 kW	2000 r/min	1/6
		HK-ST102(B)G1(H) 1/11	1.0 kW	2000 r/min	1/11
		HK-ST102(B)G1(H) 1/17	1.0 kW	2000 r/min	1/17
		HK-ST102(B)G1(H) 1/29	1.0 kW	2000 r/min	1/29
		HK-ST102(B)G1(H) 1/35	1.0 kW	2000 r/min	1/35
		HK-ST102(B)G1(H) 1/43	1.0 kW	2000 r/min	1/43
		HK-ST102(B)G1(H) 1/59	1.0 kW	2000 r/min	1/59
		HK-ST152(B)G1(H) 1/6	1.5 kW	2000 r/min	1/6
		HK-ST152(B)G1(H) 1/11	1.5 kW	2000 r/min	1/11
		HK-ST152(B)G1(H) 1/17	1.5 kW	2000 r/min	1/17
		HK-ST152(B)G1(H) 1/29	1.5 kW	2000 r/min	1/29
		HK-ST152(B)G1(H) 1/35	1.5 kW	2000 r/min	1/35
		HK-ST152(B)G1(H) 1/43	1.5 kW	2000 r/min	1/43
		HK-ST152(B)G1(H) 1/59	1.5 kW	2000 r/min	1/59
		HK-ST202(B)G1(H) 1/6	2.0 kW	2000 r/min	1/6
		HK-ST202(B)G1(H) 1/11	2.0 kW	2000 r/min	1/11
		HK-ST202(B)G1(H) 1/17	2.0 kW	2000 r/min	1/17
		HK-ST202(B)G1(H) 1/29	2.0 kW	2000 r/min	1/29
		HK-ST202(B)G1(H) 1/35	2.0 kW	2000 r/min	1/35
		HK-ST202(B)G1(H) 1/43	2.0 kW	2000 r/min	1/43
		HK-ST202(B)G1(H) 1/59	2.0 kW	2000 r/min	1/59
		HK-ST352(B)G1(H) 1/6	3.5 kW	2000 r/min	1/6
		HK-ST352(B)G1(H) 1/11	3.5 kW	2000 r/min	1/11
		HK-ST352(B)G1(H) 1/17	3.5 kW	2000 r/min	1/17
		HK-ST352(B)G1(H) 1/29	3.5 kW	2000 r/min	1/29
		HK-ST352(B)G1(H) 1/35	3.5 kW	2000 r/min	1/35
		HK-ST352(B)G1(H) 1/43	3.5 kW	2000 r/min	1/43
		HK-ST352(B)G1(H) 1/59	3.5 kW	2000 r/min	1/59
		HK-ST502(B)G1(H) 1/6	5.0 kW	2000 r/min	1/6
		HK-ST502(B)G1(H) 1/11	5.0 kW	2000 r/min	1/11
		HK-ST502(B)G1(H) 1/17	5.0 kW	2000 r/min	1/17
		HK-ST502(B)G1(H) 1/29	5.0 kW	2000 r/min	1/29
		HK-ST502(B)G1(H) 1/35	5.0 kW	2000 r/min	1/35
		HK-ST502(B)G1(H) 1/43	5.0 kW	2000 r/min	1/43
		HK-ST502(B)G1(H) 1/59	5.0 kW	2000 r/min	1/59
		HK-ST702(B)G1(H) 1/6	7.0 kW	2000 r/min	1/6
		HK-ST702(B)G1(H) 1/11	7.0 kW	2000 r/min	1/11
		HK-ST702(B)G1(H) 1/17	7.0 kW	2000 r/min	1/17
		HK-ST702(B)G1(H) 1/29	7.0 kW	2000 r/min	1/29
		HK-ST702(B)G1(H) 1/35	7.0 kW	2000 r/min	1/35
		HK-ST702(B)G1(H) 1/43	7.0 kW	2000 r/min	1/43
		HK-ST702(B)G1(H) 1/59	7.0 kW	2000 r/min	1/59

Rotary servo motors

Item		Model	Rated output	Rated speed	Reduction ratio
HK-ST series With a gear reducer for general industrial machines B: With an electromagnetic brake G1: Flange mounting G1H: Foot mounting	HK-ST_4_G_	HK-ST524(B)G1(H) 1/6	0.5 kW	2000 r/min	1/6
		HK-ST524(B)G1(H) 1/11	0.5 kW	2000 r/min	1/11
		HK-ST524(B)G1(H) 1/17	0.5 kW	2000 r/min	1/17
		HK-ST524(B)G1(H) 1/29	0.5 kW	2000 r/min	1/29
		HK-ST524(B)G1(H) 1/35	0.5 kW	2000 r/min	1/35
		HK-ST524(B)G1(H) 1/43	0.5 kW	2000 r/min	1/43
		HK-ST524(B)G1(H) 1/59	0.5 kW	2000 r/min	1/59
		HK-ST1024(B)G1(H) 1/6	1.0 kW	2000 r/min	1/6
		HK-ST1024(B)G1(H) 1/11	1.0 kW	2000 r/min	1/11
		HK-ST1024(B)G1(H) 1/17	1.0 kW	2000 r/min	1/17
		HK-ST1024(B)G1(H) 1/29	1.0 kW	2000 r/min	1/29
		HK-ST1024(B)G1(H) 1/35	1.0 kW	2000 r/min	1/35
		HK-ST1024(B)G1(H) 1/43	1.0 kW	2000 r/min	1/43
		HK-ST1024(B)G1(H) 1/59	1.0 kW	2000 r/min	1/59
		HK-ST1524(B)G1(H) 1/6	1.5 kW	2000 r/min	1/6
		HK-ST1524(B)G1(H) 1/11	1.5 kW	2000 r/min	1/11
		HK-ST1524(B)G1(H) 1/17	1.5 kW	2000 r/min	1/17
		HK-ST1524(B)G1(H) 1/29	1.5 kW	2000 r/min	1/29
		HK-ST1524(B)G1(H) 1/35	1.5 kW	2000 r/min	1/35
		HK-ST1524(B)G1(H) 1/43	1.5 kW	2000 r/min	1/43
		HK-ST1524(B)G1(H) 1/59	1.5 kW	2000 r/min	1/59
		HK-ST2024(B)G1(H) 1/6	2.0 kW	2000 r/min	1/6
		HK-ST2024(B)G1(H) 1/11	2.0 kW	2000 r/min	1/11
		HK-ST2024(B)G1(H) 1/17	2.0 kW	2000 r/min	1/17
		HK-ST2024(B)G1(H) 1/29	2.0 kW	2000 r/min	1/29
		HK-ST2024(B)G1(H) 1/35	2.0 kW	2000 r/min	1/35
		HK-ST2024(B)G1(H) 1/43	2.0 kW	2000 r/min	1/43
		HK-ST2024(B)G1(H) 1/59	2.0 kW	2000 r/min	1/59
		HK-ST3524(B)G1(H) 1/6	3.5 kW	2000 r/min	1/6
		HK-ST3524(B)G1(H) 1/11	3.5 kW	2000 r/min	1/11
		HK-ST3524(B)G1(H) 1/17	3.5 kW	2000 r/min	1/17
		HK-ST3524(B)G1(H) 1/29	3.5 kW	2000 r/min	1/29
		HK-ST3524(B)G1(H) 1/35	3.5 kW	2000 r/min	1/35
		HK-ST3524(B)G1(H) 1/43	3.5 kW	2000 r/min	1/43
		HK-ST3524(B)G1(H) 1/59	3.5 kW	2000 r/min	1/59
		HK-ST5024(B)G1(H) 1/6	5.0 kW	2000 r/min	1/6
		HK-ST5024(B)G1(H) 1/11	5.0 kW	2000 r/min	1/11
		HK-ST5024(B)G1(H) 1/17	5.0 kW	2000 r/min	1/17
		HK-ST5024(B)G1(H) 1/29	5.0 kW	2000 r/min	1/29
		HK-ST5024(B)G1(H) 1/35	5.0 kW	2000 r/min	1/35
		HK-ST5024(B)G1(H) 1/43	5.0 kW	2000 r/min	1/43
		HK-ST5024(B)G1(H) 1/59	5.0 kW	2000 r/min	1/59
		HK-ST7024(B)G1(H) 1/6	7.0 kW	2000 r/min	1/6
		HK-ST7024(B)G1(H) 1/11	7.0 kW	2000 r/min	1/11
		HK-ST7024(B)G1(H) 1/17	7.0 kW	2000 r/min	1/17
		HK-ST7024(B)G1(H) 1/29	7.0 kW	2000 r/min	1/29
		HK-ST7024(B)G1(H) 1/35	7.0 kW	2000 r/min	1/35
		HK-ST7024(B)G1(H) 1/43	7.0 kW	2000 r/min	1/43
		HK-ST7024(B)G1(H) 1/59	7.0 kW	2000 r/min	1/59

Product List

Rotary servo motors

Item		Model		Rated output	Rated speed	Reduction ratio
HK-ST series With a flange-output type gear reducer for high precision applications, flange mounting B: With an electromagnetic brake	HK-ST_G_	HK-ST52(B)G5	1/5	0.5 kW	2000 r/min	1/5
		HK-ST52(B)G5	1/11	0.5 kW	2000 r/min	1/11
		HK-ST52(B)G5	1/21	0.5 kW	2000 r/min	1/21
		HK-ST52(B)G5	1/33	0.5 kW	2000 r/min	1/33
		HK-ST52(B)G5	1/45	0.5 kW	2000 r/min	1/45
		HK-ST102(B)G5	1/5	1.0 kW	2000 r/min	1/5
		HK-ST102(B)G5	1/11	1.0 kW	2000 r/min	1/11
		HK-ST102(B)G5	1/21	1.0 kW	2000 r/min	1/21
		HK-ST102(B)G5	1/33	1.0 kW	2000 r/min	1/33
		HK-ST102(B)G5	1/45	1.0 kW	2000 r/min	1/45
		HK-ST152(B)G5	1/5	1.5 kW	2000 r/min	1/5
		HK-ST152(B)G5	1/11	1.5 kW	2000 r/min	1/11
		HK-ST152(B)G5	1/21	1.5 kW	2000 r/min	1/21
		HK-ST152(B)G5	1/33	1.5 kW	2000 r/min	1/33
		HK-ST152(B)G5	1/45	1.5 kW	2000 r/min	1/45
		HK-ST202(B)G5	1/5	2.0 kW	2000 r/min	1/5
		HK-ST202(B)G5	1/11	2.0 kW	2000 r/min	1/11
		HK-ST202(B)G5	1/21	2.0 kW	2000 r/min	1/21
		HK-ST202(B)G5	1/33	2.0 kW	2000 r/min	1/33
		HK-ST202(B)G5	1/45	2.0 kW	2000 r/min	1/45
		HK-ST352(B)G5	1/5	3.5 kW	2000 r/min	1/5
		HK-ST352(B)G5	1/11	3.5 kW	2000 r/min	1/11
		HK-ST352(B)G5	1/21	3.5 kW	2000 r/min	1/21
		HK-ST502(B)G5	1/5	5.0 kW	2000 r/min	1/5
		HK-ST502(B)G5	1/11	5.0 kW	2000 r/min	1/11
		HK-ST702(B)G5	1/5	7.0 kW	2000 r/min	1/5
	HK-ST_4_G_	HK-ST524(B)G5	1/5	0.5 kW	2000 r/min	1/5
		HK-ST524(B)G5	1/11	0.5 kW	2000 r/min	1/11
		HK-ST524(B)G5	1/21	0.5 kW	2000 r/min	1/21
		HK-ST524(B)G5	1/33	0.5 kW	2000 r/min	1/33
		HK-ST524(B)G5	1/45	0.5 kW	2000 r/min	1/45
		HK-ST1024(B)G5	1/5	1.0 kW	2000 r/min	1/5
		HK-ST1024(B)G5	1/11	1.0 kW	2000 r/min	1/11
		HK-ST1024(B)G5	1/21	1.0 kW	2000 r/min	1/21
		HK-ST1024(B)G5	1/33	1.0 kW	2000 r/min	1/33
		HK-ST1024(B)G5	1/45	1.0 kW	2000 r/min	1/45
		HK-ST1524(B)G5	1/5	1.5 kW	2000 r/min	1/5
		HK-ST1524(B)G5	1/11	1.5 kW	2000 r/min	1/11
		HK-ST1524(B)G5	1/21	1.5 kW	2000 r/min	1/21
		HK-ST1524(B)G5	1/33	1.5 kW	2000 r/min	1/33
		HK-ST1524(B)G5	1/45	1.5 kW	2000 r/min	1/45
		HK-ST2024(B)G5	1/5	2.0 kW	2000 r/min	1/5
		HK-ST2024(B)G5	1/11	2.0 kW	2000 r/min	1/11
		HK-ST2024(B)G5	1/21	2.0 kW	2000 r/min	1/21
		HK-ST2024(B)G5	1/33	2.0 kW	2000 r/min	1/33
		HK-ST2024(B)G5	1/45	2.0 kW	2000 r/min	1/45
		HK-ST3524(B)G5	1/5	3.5 kW	2000 r/min	1/5
		HK-ST3524(B)G5	1/11	3.5 kW	2000 r/min	1/11
		HK-ST3524(B)G5	1/21	3.5 kW	2000 r/min	1/21
		HK-ST5024(B)G5	1/5	5.0 kW	2000 r/min	1/5
		HK-ST5024(B)G5	1/11	5.0 kW	2000 r/min	1/11
		HK-ST7024(B)G5	1/5	7.0 kW	2000 r/min	1/5

Rotary servo motors

Item		Model		Rated output	Rated speed	Reduction ratio
HK-ST series With a shaft-output type gear reducer for high precision applications, flange mounting B: With an electromagnetic brake	HK-ST_G_	HK-ST52(B)G7	1/5	0.5 kW	2000 r/min	1/5
		HK-ST52(B)G7	1/11	0.5 kW	2000 r/min	1/11
		HK-ST52(B)G7	1/21	0.5 kW	2000 r/min	1/21
		HK-ST52(B)G7	1/33	0.5 kW	2000 r/min	1/33
		HK-ST52(B)G7	1/45	0.5 kW	2000 r/min	1/45
		HK-ST102(B)G7	1/5	1.0 kW	2000 r/min	1/5
		HK-ST102(B)G7	1/11	1.0 kW	2000 r/min	1/11
		HK-ST102(B)G7	1/21	1.0 kW	2000 r/min	1/21
		HK-ST102(B)G7	1/33	1.0 kW	2000 r/min	1/33
		HK-ST102(B)G7	1/45	1.0 kW	2000 r/min	1/45
		HK-ST152(B)G7	1/5	1.5 kW	2000 r/min	1/5
		HK-ST152(B)G7	1/11	1.5 kW	2000 r/min	1/11
		HK-ST152(B)G7	1/21	1.5 kW	2000 r/min	1/21
		HK-ST152(B)G7	1/33	1.5 kW	2000 r/min	1/33
		HK-ST152(B)G7	1/45	1.5 kW	2000 r/min	1/45
		HK-ST202(B)G7	1/5	2.0 kW	2000 r/min	1/5
		HK-ST202(B)G7	1/11	2.0 kW	2000 r/min	1/11
		HK-ST202(B)G7	1/21	2.0 kW	2000 r/min	1/21
		HK-ST202(B)G7	1/33	2.0 kW	2000 r/min	1/33
		HK-ST202(B)G7	1/45	2.0 kW	2000 r/min	1/45
		HK-ST352(B)G7	1/5	3.5 kW	2000 r/min	1/5
		HK-ST352(B)G7	1/11	3.5 kW	2000 r/min	1/11
		HK-ST352(B)G7	1/21	3.5 kW	2000 r/min	1/21
		HK-ST502(B)G7	1/5	5.0 kW	2000 r/min	1/5
		HK-ST502(B)G7	1/11	5.0 kW	2000 r/min	1/11
		HK-ST702(B)G7	1/5	7.0 kW	2000 r/min	1/5
	HK-ST_4_G_	HK-ST524(B)G7	1/5	0.5 kW	2000 r/min	1/5
		HK-ST524(B)G7	1/11	0.5 kW	2000 r/min	1/11
		HK-ST524(B)G7	1/21	0.5 kW	2000 r/min	1/21
		HK-ST524(B)G7	1/33	0.5 kW	2000 r/min	1/33
		HK-ST524(B)G7	1/45	0.5 kW	2000 r/min	1/45
		HK-ST1024(B)G7	1/5	1.0 kW	2000 r/min	1/5
		HK-ST1024(B)G7	1/11	1.0 kW	2000 r/min	1/11
		HK-ST1024(B)G7	1/21	1.0 kW	2000 r/min	1/21
		HK-ST1024(B)G7	1/33	1.0 kW	2000 r/min	1/33
		HK-ST1024(B)G7	1/45	1.0 kW	2000 r/min	1/45
		HK-ST1524(B)G7	1/5	1.5 kW	2000 r/min	1/5
		HK-ST1524(B)G7	1/11	1.5 kW	2000 r/min	1/11
		HK-ST1524(B)G7	1/21	1.5 kW	2000 r/min	1/21
		HK-ST1524(B)G7	1/33	1.5 kW	2000 r/min	1/33
		HK-ST1524(B)G7	1/45	1.5 kW	2000 r/min	1/45
		HK-ST2024(B)G7	1/5	2.0 kW	2000 r/min	1/5
		HK-ST2024(B)G7	1/11	2.0 kW	2000 r/min	1/11
		HK-ST2024(B)G7	1/21	2.0 kW	2000 r/min	1/21
		HK-ST2024(B)G7	1/33	2.0 kW	2000 r/min	1/33
		HK-ST2024(B)G7	1/45	2.0 kW	2000 r/min	1/45
		HK-ST3524(B)G7	1/5	3.5 kW	2000 r/min	1/5
		HK-ST3524(B)G7	1/11	3.5 kW	2000 r/min	1/11
		HK-ST3524(B)G7	1/21	3.5 kW	2000 r/min	1/21
		HK-ST5024(B)G7	1/5	5.0 kW	2000 r/min	1/5
		HK-ST5024(B)G7	1/11	5.0 kW	2000 r/min	1/11
		HK-ST7024(B)G7	1/5	7.0 kW	2000 r/min	1/5

Product List

Rotary servo motors

Item		Flange size [mm]	Model	Rated output	Rated speed
HK-RT series B: With an electromagnetic brake	HK-RT_W	90 x 90	HK-RT103W(B)	1.0 kW	3000 r/min
			HK-RT153W(B)	1.5 kW	3000 r/min
			HK-RT203W(B)	2.0 kW	3000 r/min
		130 x 130	HK-RT353W(B)	3.5 kW	3000 r/min
			HK-RT503W(B)	5.0 kW	3000 r/min
			HK-RT703W(B)	7.0 kW	3000 r/min
	HK-RT_4W	90 x 90	HK-RT1034W(B)	1.0 kW	3000 r/min
			HK-RT1534W(B)	1.5 kW	3000 r/min
			HK-RT2034W(B)	2.0 kW	3000 r/min
		130 x 130	HK-RT3534W(B)	3.5 kW	3000 r/min
			HK-RT5034W(B)	5.0 kW	3000 r/min
			HK-RT7034W(B)	7.0 kW	3000 r/min
Servo motors with functional safety HK-RT series B: With an electromagnetic brake	HK-RT_W_WS	90 x 90	HK-RT103W(B)WS	1.0 kW	3000 r/min
			HK-RT153W(B)WS	1.5 kW	3000 r/min
			HK-RT203W(B)WS	2.0 kW	3000 r/min
		130 x 130	HK-RT353W(B)WS	3.5 kW	3000 r/min
			HK-RT503W(B)WS	5.0 kW	3000 r/min
			HK-RT703W(B)WS	7.0 kW	3000 r/min
	HK-RT_4W_WS	90 x 90	HK-RT1034W(B)WS	1.0 kW	3000 r/min
			HK-RT1534W(B)WS	1.5 kW	3000 r/min
			HK-RT2034W(B)WS	2.0 kW	3000 r/min
		130 x 130	HK-RT3534W(B)WS	3.5 kW	3000 r/min
			HK-RT5034W(B)WS	5.0 kW	3000 r/min
			HK-RT7034W(B)WS	7.0 kW	3000 r/min
HK-JT series B: With an electromagnetic brake	HK-JT_J	220 x 220	HK-JT701M(B)J	7.0 kW	1500 r/min
			HK-JT11K1M(B)J	11 kW	1500 r/min
			HK-JT15K1M(B)J	15 kW	1500 r/min
		250 x 250	HK-JT15K1J	15 kW	1000 r/min
			HK-JT22K1MJ	22 kW	1500 r/min
	HK-JT_4_J	220 x 220	HK-JT701M4(B)J	7.0 kW	1500 r/min
			HK-JT11K1M4(B)J	11 kW	1500 r/min
			HK-JT15K1M4(B)J	15 kW	1500 r/min
		250 x 250	HK-JT22K1M4J	22 kW	1500 r/min
Servo motors with functional safety HK-JT series B: With an electromagnetic brake	HK-JT_JWS	220 x 220	HK-JT701M(B)JWS	7.0 kW	1500 r/min
			HK-JT11K1M(B)JWS	11 kW	1500 r/min
			HK-JT15K1M(B)JWS	15 kW	1500 r/min
		250 x 250	HK-JT22K1MJWS	22 kW	1500 r/min
	HK-JT_4_JWS	220 x 220	HK-JT701M4(B)JWS	7.0 kW	1500 r/min
			HK-JT11K1M4(B)JWS	11 kW	1500 r/min
			HK-JT15K1M4(B)JWS	15 kW	1500 r/min
		250 x 250	HK-JT22K1M4JWS	22 kW	1500 r/min

Linear servo motors

Item	Model	Continuous thrust	Maximum thrust	Maximum speed	Length
LM-H3 series primary side (coil)	LM-H3P2A-07P-BSS0	70 N	175 N	3.0 m/s	-
	LM-H3P3A-12P-CSS0	120 N	300 N	3.0 m/s	-
	LM-H3P3B-24P-CSS0	240 N	600 N	3.0 m/s	-
	LM-H3P3C-36P-CSS0	360 N	900 N	3.0 m/s	-
	LM-H3P3D-48P-CSS0	480 N	1200 N	3.0 m/s	-
	LM-H3P7A-24P-ASS0	240 N	600 N	3.0 m/s	-
	LM-H3P7B-48P-ASS0	480 N	1200 N	3.0 m/s	-
	LM-H3P7C-72P-ASS0	720 N	1800 N	3.0 m/s	-
	LM-H3P7D-96P-ASS0	960 N	2400 N	3.0 m/s	-
LM-H3 series secondary side (magnet)	LM-H3S20-288-BSS0	-	-	-	288 mm
	LM-H3S20-384-BSS0	-	-	-	384 mm
	LM-H3S20-480-BSS0	-	-	-	480 mm
	LM-H3S20-768-BSS0	-	-	-	768 mm
	LM-H3S30-288-CSS0	-	-	-	288 mm
	LM-H3S30-384-CSS0	-	-	-	384 mm
	LM-H3S30-480-CSS0	-	-	-	480 mm
	LM-H3S30-768-CSS0	-	-	-	768 mm
	LM-H3S70-288-ASS0	-	-	-	288 mm
	LM-H3S70-384-ASS0	-	-	-	384 mm
	LM-H3S70-480-ASS0	-	-	-	480 mm
	LM-H3S70-768-ASS0	-	-	-	768 mm
LM-AJ series primary side (coil)	LM-AJP1B-07K-JSS0	68.1 N	214.7 N	6.5 m/s	-
	LM-AJP1D-14K-JSS0	136.2 N	429.4 N	6.5 m/s	-
	LM-AJP2B-12S-JSS0	117.0 N	369.0 N	4.0 m/s	-
	LM-AJP2D-23T-JSS0	234.0 N	738.1 N	5.0 m/s	-
	LM-AJP3B-17N-JSS0	174.5 N	550.2 N	2.5 m/s	-
	LM-AJP3D-35R-JSS0	348.9 N	1100.4 N	3.5 m/s	-
	LM-AJP4B-22M-JSS0	223.4 N	704.5 N	2.0 m/s	-
	LM-AJP4D-45N-JSS0	446.8 N	1409.1 N	2.5 m/s	-
LM-AJ series secondary side (magnet)	LM-AJS10-080-JSS0	-	-	-	80 mm
	LM-AJS10-200-JSS0	-	-	-	200 mm
	LM-AJS10-400-JSS0	-	-	-	400 mm
	LM-AJS20-080-JSS0	-	-	-	80 mm
	LM-AJS20-200-JSS0	-	-	-	200 mm
	LM-AJS20-400-JSS0	-	-	-	400 mm
	LM-AJS30-080-JSS0	-	-	-	80 mm
	LM-AJS30-200-JSS0	-	-	-	200 mm
	LM-AJS30-400-JSS0	-	-	-	400 mm
	LM-AJS40-080-JSS0	-	-		80 mm
	LM-AJS40-200-JSS0	-	-	-	200 mm
	LM-AJS40-400-JSS0	-	-	-	400 mm
LM-F series primary side (coil)	LM-FP2B-06M-1SS0	300 N (natural cooling)/ 600 N (force cooling)	1800 N	2.0 m/s	-
	LM-FP2D-12M-1SS0	600 N (natural cooling)/ 1200 N (force cooling)	3600 N	2.0 m/s	-
	LM-FP2F-18M-1SS0	900 N (natural cooling)/ 1800 N (force cooling)	5400 N	2.0 m/s	-
	LM-FP4B-12M-1SS0	600 N (natural cooling)/ 1200 N (force cooling)	3600 N	2.0 m/s	-
	LM-FP4D-24M-1SS0	1200 N (natural cooling)/ 2400 N (force cooling)	7200 N	2.0 m/s	-
LM-F series secondary side (magnet)	LM-FS20-480-1SS0	-	-	-	480 mm
	LM-FS20-576-1SS0	-	-	-	576 mm
	LM-FS40-480-1SS0	-	-	-	480 mm
	LM-FS40-576-1SS0	-	-	-	576 mm

Linear servo motors

Item	Model	Continuous thrust	Maximum thrust	Maximum speed	Length
LM-K2 series primary side (coil)	LM-K2P1A-01M-2SS1	120 N	300 N	2.0 m/s	-
	LM-K2P1C-03M-2SS1	360 N	900 N	2.0 m/s	-
	LM-K2P2A-02M-1SS1	240 N	600 N	2.0 m/s	-
	LM-K2P2C-07M-1SS1	720 N	1800 N	2.0 m/s	-
	LM-K2P2E-12M-1SS1	1200 N	3000 N	2.0 m/s	-
	LM-K2P3C-14M-1SS1	1440 N	3600 N	2.0 m/s	-
	LM-K2P3E-24M-1SS1	2400 N	6000 N	2.0 m/s	-
LM-K2 series secondary side (magnet)	LM-K2S10-288-2SS1	-	-	-	288 mm
	LM-K2S10-384-2SS1	-	-	-	384 mm
	LM-K2S10-480-2SS1	-	-	-	480 mm
	LM-K2S10-768-2SS1	-	-	-	768 mm
	LM-K2S20-288-1SS1	-	-	-	288 mm
	LM-K2S20-384-1SS1	-	-	-	384 mm
	LM-K2S20-480-1SS1	-	-	-	480 mm
	LM-K2S20-768-1SS1	-	-	-	768 mm
	LM-K2S30-288-1SS1	-	-	-	288 mm
	LM-K2S30-384-1SS1	-	-	-	384 mm
	LM-K2S30-480-1SS1	-	-	-	480 mm
	LM-K2S30-768-1SS1	-	-	-	768 mm
LM-U2 series primary side (coil)	LM-U2PAB-05M-0SS0	50 N	150 N	2.0 m/s	-
	LM-U2PAD-10M-0SS0	100 N	300 N	2.0 m/s	-
	LM-U2PAF-15M-0SS0	150 N	450 N	2.0 m/s	-
	LM-U2PBB-07M-1SS0	75 N	225 N	2.0 m/s	-
	LM-U2PBD-15M-1SS0	150 N	450 N	2.0 m/s	-
	LM-U2PBF-22M-1SS0	225 N	675 N	2.0 m/s	-
	LM-U2P2B-40M-2SS0	400 N	1600 N	2.0 m/s	-
	LM-U2P2C-60M-2SS0	600 N	2400 N	2.0 m/s	-
	LM-U2P2D-80M-2SS0	800 N	3200 N	2.0 m/s	-
LM-U2 series secondary side (magnet)	LM-U2SA0-240-0SS0	-	-	-	240 mm
	LM-U2SA0-300-0SS0	-	-	-	300 mm
	LM-U2SA0-420-0SS0	-	-	-	420 mm
	LM-U2SB0-240-1SS1	-	-	-	240 mm
	LM-U2SB0-300-1SS1	-	-	-	300 mm
	LM-U2SB0-420-1SS1	-	-	-	420 mm
	LM-U2S20-300-2SS1	-	-	-	300 mm
	LM-U2S20-480-2SS1	-	-	-	480 mm
LM-AU series primary side (coil)	LM-AUP3A-03V-JSS0	28 N	122 N	4.5 m/s	-
	LM-AUP3B-06V-JSS0	57 N	274 N	4.5 m/s	-
	LM-AUP3C-09V-JSS0	85 N	411 N	4.5 m/s	-
	LM-AUP3D-11R-JSS0	113 N	549 N	3.5 m/s	-
	LM-AUP4A-04R-JSS0	44 N	280 N	3.5 m/s	-
	LM-AUP4B-09R-JSS0	88 N	561 N	3.5 m/s	-
	LM-AUP4C-13P-JSS0	132 N	842 N	3.0 m/s	-
	LM-AUP4D-18M-JSS0	176 N	970 N	2.0 m/s	-
	LM-AUP4F-26P-JSS0	264 N	1684 N	3.0 m/s	-
	LM-AUP4H-35M-JSS0	350 N	1764 N	2.0 m/s	-
LM-AU series secondary side (magnet)	LM-AUS30-120-JSS0	-	-	-	120 mm
	LM-AUS30-180-JSS0	-	-	-	180 mm
	LM-AUS30-240-JSS0	-	-	-	240 mm
	LM-AUS30-300-JSS0	-	-	-	300 mm
	LM-AUS30-600-JSS0	-	-	-	600 mm
	LM-AUS40-120-JSS0	-	-	-	120 mm
	LM-AUS40-180-JSS0	-	-	-	180 mm
	LM-AUS40-240-JSS0	-	-	-	240 mm
	LM-AUS40-300-JSS0	-	-	-	300 mm
	LM-AUS40-600-JSS0	-	-	-	600 mm

Direct drive motors

Item	Model	Rated torque	Maximum torque	Rated speed
TM-RG2M series	TM-RG2M002C30	2.2 N•m	8.8 N•m	300 r/min
	TM-RG2M004E30	4.5 N•m	13.5 N•m	300 r/min
	TM-RG2M009G30	9 N•m	27 N•m	300 r/min
TM-RU2M series	TM-RU2M002C30	2.2 N•m	8.8 N•m	300 r/min
	TM-RU2M004E30	4.5 N•m	13.5 N•m	300 r/min
	TM-RU2M009G30	9 N•m	27 N•m	300 r/min
TM-RFM series	TM-RFM002C20	2 N•m	6 N•m	200 r/min
	TM-RFM004C20	4 N•m	12 N•m	200 r/min
	TM-RFM006C20	6 N•m	18 N•m	200 r/min
	TM-RFM006E20	6 N•m	18 N•m	200 r/min
	TM-RFM012E20	12 N•m	36 N•m	200 r/min
	TM-RFM018E20	18 N•m	54 N•m	200 r/min
	TM-RFM012G20	12 N•m	36 N•m	200 r/min
	TM-RFM048G20	48 N•m	144 N•m	200 r/min
	TM-RFM072G20	72 N•m	216 N•m	200 r/min
	TM-RFM040J10	40 N•m	120 N•m	100 r/min
	TM-RFM120J10	120 N•m	360 N•m	100 r/min
	TM-RFM240J10	240 N•m	720 N•m	100 r/min

Cables for rotary servo motors

Item	Model	Length	Bending life	IP rating	Application
Motor cable (dual cable type/ direct connection type for 10 m or shorter)	MR-AEPB2CBL2M-A1-H	2 m	Long bending life	IP65	HK-KT series HK-MT series HK-RT103(4)WB, 153(4)WB, 203(4)WB Load-side lead With electromagnetic brake wires
	MR-AEPB2CBL5M-A1-H	5 m	Long bending life	IP65	
	MR-AEPB2CBL10M-A1-H	10 m	Long bending life	IP65	
	MR-AEPB2CBL2M-A1-L	2 m	Standard	IP65	
	MR-AEPB2CBL5M-A1-L	5 m	Standard	IP65	
	MR-AEPB2CBL10M-A1-L	10 m	Standard	IP65	
	MR-AEPB2CBL2M-A2-H	2 m	Long bending life	IP65	HK-KT series HK-MT series HK-RT103(4)WB, 153(4)WB, 203(4)WB Opposite to load-side lead With electromagnetic brake wires
	MR-AEPB2CBL5M-A2-H	5 m	Long bending life	IP65	
	MR-AEPB2CBL10M-A2-H	10 m	Long bending life	IP65	
	MR-AEPB2CBL2M-A2-L	2 m	Standard	IP65	
	MR-AEPB2CBL5M-A2-L	5 m	Standard	IP65	
	MR-AEPB2CBL10M-A2-L	10 m	Standard	IP65	
	MR-AEPB2CBL2M-A5-H	2 m	Long bending life	IP65	HK-KT series HK-MT series HK-RT103(4)WB, 153(4)WB, 203(4)WB Vertical lead With electromagnetic brake wires
	MR-AEPB2CBL5M-A5-H	5 m	Long bending life	IP65	
	MR-AEPB2CBL10M-A5-H	10 m	Long bending life	IP65	
	MR-AEPB2CBL2M-A5-L	2 m	Standard	IP65	
	MR-AEPB2CBL5M-A5-L	5 m	Standard	IP65	
	MR-AEPB2CBL10M-A5-L	10 m	Standard	IP65	
	MR-AEP2CBL2M-A1-H	2 m	Long bending life	IP65	HK-KT series HK-MT series HK-RT103(4)W, 153(4)W, 203(4)W Load-side lead Without electromagnetic brake wires
	MR-AEP2CBL5M-A1-H	5 m	Long bending life	IP65	
	MR-AEP2CBL10M-A1-H	10 m	Long bending life	IP65	
	MR-AEP2CBL2M-A1-L	2 m	Standard	IP65	
	MR-AEP2CBL5M-A1-L	5 m	Standard	IP65	
	MR-AEP2CBL10M-A1-L	10 m	Standard	IP65	
	MR-AEP2CBL2M-A2-H	2 m	Long bending life	IP65	HK-KT series HK-MT series HK-RT103(4)W, 153(4)W, 203(4)W Opposite to load-side lead Without electromagnetic brake wires
	MR-AEP2CBL5M-A2-H	5 m	Long bending life	IP65	
	MR-AEP2CBL10M-A2-H	10 m	Long bending life	IP65	
	MR-AEP2CBL2M-A2-L	2 m	Standard	IP65	
	MR-AEP2CBL5M-A2-L	5 m	Standard	IP65	
	MR-AEP2CBL10M-A2-L	10 m	Standard	IP65	
	MR-AEP2CBL2M-A5-H	2 m	Long bending life	IP65	HK-KT series HK-MT series HK-RT103(4)W, 153(4)W, 203(4)W Vertical lead Without electromagnetic brake wires
	MR-AEP2CBL5M-A5-H	5 m	Long bending life	IP65	
	MR-AEP2CBL10M-A5-H	10 m	Long bending life	IP65	
	MR-AEP2CBL2M-A5-L	2 m	Standard	IP65	
	MR-AEP2CBL5M-A5-L	5 m	Standard	IP65	
	MR-AEP2CBL10M-A5-L	10 m	Standard	IP65	

Cables for rotary servo motors

Item	Model	Length	Bending life	IP rating	Application
Motor cable (Note 1) (dual cable type/ junction type for over 10 m)	MR-AEPB2J10CBL03M-A1-L	0.3 m	Standard	IP20	HK-KT series HK-MT series HK-RT103(4)WB, 153(4)WB, 203(4)WB Load-side lead With electromagnetic brake wires
	MR-AEPB2J10CBL03M-A2-L	0.3 m	Standard	IP20	HK-KT series HK-MT series HK-RT103(4)WB, 153(4)WB, 203(4)WB Opposite to load-side lead With electromagnetic brake wires
	MR-AEPB2J10CBL03M-A5-L	0.3 m	Standard	IP20	HK-KT series HK-MT series HK-RT103(4)WB, 153(4)WB, 203(4)WB Vertical lead With electromagnetic brake wires
	MR-AEP2J10CBL03M-A1-L	0.3 m	Standard	IP20	HK-KT series HK-MT series HK-RT103(4)W, 153(4)W, 203(4)W Load-side lead Without electromagnetic brake wires
	MR-AEP2J10CBL03M-A2-L	0.3 m	Standard	IP20	HK-KT series HK-MT series HK-RT103(4)W, 153(4)W, 203(4)W Opposite to load-side lead Without electromagnetic brake wires
	MR-AEP2J10CBL03M-A5-L	0.3 m	Standard	IP20	HK-KT series HK-MT series HK-RT103(4)W, 153(4)W, 203(4)W Vertical lead Without electromagnetic brake wires
Encoder cable (Note 2)	MR-AEKCBL20M-H	20 m	Long bending life	IP20	HK-KT series HK-MT series HK-RT103(4)W, 153(4)W, 203(4)W
	MR-AEKCBL30M-H	30 m	Long bending life	IP20	
	MR-AEKCBL40M-H	40 m	Long bending life	IP20	
	MR-AEKCBL50M-H	50 m	Long bending life	IP20	
	MR-AEKCBL20M-L	20 m	Standard	IP20	
	MR-AEKCBL30M-L	30 m	Standard	IP20	

Notes:
1. Use this cable in combination with MR-AEKCBL_M-H, MR-AEKCBL_M-L, or MR-ECNM.
2. Use this cable in combination with MR-AEPB2J10CBL03M-_-L or MR-AEP2J10CBL03M-_-L.

Cables for rotary servo motors

Item	Model	Length	Bending life	IP rating	Application
Motor cable (Note 1) (dual cable type/ junction type for over 10 m)	MR-AEPB2J20CBL03M-A1-L	0.3 m	Standard	IP65	HK-KT series HK-MT series HK-RT103(4)WB, 153(4)WB, 203(4)WB Load-side lead With electromagnetic brake wires
	MR-AEPB2J20CBL03M-A2-L	0.3 m	Standard	IP65	HK-KT series HK-MT series HK-RT103(4)WB, 153(4)WB, 203(4)WB Opposite to load-side lead With electromagnetic brake wires
	MR-AEPB2J20CBL03M-A5-L	0.3 m	Standard	IP65	HK-KT series HK-MT series HK-RT103(4)WB, 153(4)WB, 203(4)WB Vertical lead With electromagnetic brake wires
	MR-AEP2J20CBL03M-A1-L	0.3 m	Standard	IP65	HK-KT series HK-MT series HK-RT103(4)W, 153(4)W, 203(4)W Load-side lead Without electromagnetic brake wires
	MR-AEP2J20CBL03M-A2-L	0.3 m	Standard	IP65	HK-KT series HK-MT series HK-RT103(4)W, 153(4)W, 203(4)W Opposite to load-side lead Without electromagnetic brake wires
	MR-AEP2J20CBL03M-A5-L	0.3 m	Standard	IP65	HK-KT series HK-MT series HK-RT103(4)W, 153(4)W, 203(4)W Vertical lead Without electromagnetic brake wires

Notes:

1. Use this cable in combination with MR-AENSCBL_M-H, MR-AENSCBL_M-L, or MR-J3SCNS.

Connector sets for rotary servo motors

Item	Model	Description		IP rating	Application
Encoder cable	MR-J3ENSCBL2M-H	2 m	Long bending life	IP67	HK-ST series HK-RT353(4)W, 503(4)W, 703(4)W HK-JT701M(4)J, 11K1M(4)J, 15K1M(4)J
	MR-J3ENSCBL5M-H	5 m	Long bending life	IP67	
	MR-J3ENSCBL10M-H	10 m	Long bending life	IP67	
	MR-J3ENSCBL2M-L	2 m	Standard	IP67	
	MR-J3ENSCBL5M-L	5 m	Standard	IP67	
	MR-J3ENSCBL10M-L	10 m	Standard	IP67	
	MR-AENSCBL20M-H (Note 1)	20 m	Long bending life	IP67	HK-KT series HK-MT series HK-ST series HK-RT series HK-JT701M(4)J, 11K1M(4)J, 15K1M(4)J
	MR-AENSCBL30M-H (Note 1)	30 m	Long bending life	IP67	
	MR-AENSCBL40M-H (Note 1)	40 m	Long bending life	IP67	
	MR-AENSCBL50M-H (Note 1)	50 m	Long bending life	IP67	
	MR-AENSCBL20M-L (Note 1)	20 m	Standard	IP67	
	MR-AENSCBL30M-L (Note 1)	30 m	Standard	IP67	
	MR-AENECBL2M-H-MTH	2 m	Long bending life	IP67	HK-JT15K1J, 22K1M(4)J
	MR-AENECBL5M-H-MTH	5 m	Long bending life	IP67	
	MR-AENECBL10M-H-MTH	10 m	Long bending life	IP67	
	MR-AENECBL20M-H-MTH	20 m	Long bending life	IP67	
	MR-AENECBL30M-H-MTH	30 m	Long bending life	IP67	
	MR-AENECBL40M-H-MTH	40 m	Long bending life	IP67	
	MR-AENECBL50M-H-MTH	50 m	Long bending life	IP67	
Motor cable (single cable type/ direct connection type for 10 m or shorter)	MR-AEPB1CBL2M-A1-H	2 m	Long bending life	IP65	HK-KT series HK-MT series HK-RT103(4)WB, 153(4)WB, 203(4)WB Load-side lead With electromagnetic brake wires
	MR-AEPB1CBL5M-A1-H	5 m	Long bending life	IP65	
	MR-AEPB1CBL10M-A1-H	10 m	Long bending life	IP65	
	MR-AEPB1CBL2M-A1-L	2 m	Standard	IP65	
	MR-AEPB1CBL5M-A1-L	5 m	Standard	IP65	
	MR-AEPB1CBL10M-A1-L	10 m	Standard	IP65	
	MR-AEPB1CBL2M-A2-H	2 m	Long bending life	IP65	HK-KT series HK-MT series HK-RT103(4)WB, 153(4)WB, 203(4)WB Opposite to load-side lead With electromagnetic brake wires
	MR-AEPB1CBL5M-A2-H	5 m	Long bending life	IP65	
	MR-AEPB1CBL10M-A2-H	10 m	Long bending life	IP65	
	MR-AEPB1CBL2M-A2-L	2 m	Standard	IP65	
	MR-AEPB1CBL5M-A2-L	5 m	Standard	IP65	
	MR-AEPB1CBL10M-A2-L	10 m	Standard	IP65	
	MR-AEPB1CBL2M-A5-H	2 m	Long bending life	IP65	HK-KT series HK-MT series HK-RT103(4)WB, 153(4)WB, 203(4)WB Vertical lead With electromagnetic brake wires
	MR-AEPB1CBL5M-A5-H	5 m	Long bending life	IP65	
	MR-AEPB1CBL10M-A5-H	10 m	Long bending life	IP65	
	MR-AEPB1CBL2M-A5-L	2 m	Standard	IP65	
	MR-AEPB1CBL5M-A5-L	5 m	Standard	IP65	
	MR-AEPB1CBL10M-A5-L	10 m	Standard	IP65	
	MR-AEP1CBL2M-A1-H	2 m	Long bending life	IP65	HK-KT series HK-MT series HK-RT103(4)W, 153(4)W, 203(4)W Load-side lead Without electromagnetic brake wires
	MR-AEP1CBL5M-A1-H	5 m	Long bending life	IP65	
	MR-AEP1CBL10M-A1-H	10 m	Long bending life	IP65	
	MR-AEP1CBL2M-A1-L	2 m	Standard	IP65	
	MR-AEP1CBL5M-A1-L	5 m	Standard	IP65	
	MR-AEP1CBL10M-A1-L	10 m	Standard	IP65	
	MR-AEP1CBL2M-A2-H	2 m	Long bending life	IP65	HK-KT series HK-MT series HK-RT103(4)W, 153(4)W, 203(4)W Opposite to load-side lead Without electromagnetic brake wires
	MR-AEP1CBL5M-A2-H	5 m	Long bending life	IP65	
	MR-AEP1CBL10M-A2-H	10 m	Long bending life	IP65	
	MR-AEP1CBL2M-A2-L	2 m	Standard	IP65	
	MR-AEP1CBL5M-A2-L	5 m	Standard	IP65	
	MR-AEP1CBL10M-A2-L	10 m	Standard	IP65	
	MR-AEP1CBL2M-A5-H	2 m	Long bending life	IP65	HK-KT series HK-MT series HK-RT103(4)W, 153(4)W, 203(4)W Vertical lead Without electromagnetic brake wires
	MR-AEP1CBL5M-A5-H	5 m	Long bending life	IP65	
	MR-AEP1CBL10M-A5-H	10 m	Long bending life	IP65	
	MR-AEP1CBL2M-A5-L	2 m	Standard	IP65	
	MR-AEP1CBL5M-A5-L	5 m	Standard	IP65	
	MR-AEP1CBL10M-A5-L	10 m	Standard	IP65	
Encoder cable	MR-EKCBL2M-H	2 m	Long bending life	IP20	Connecting a load-side encoder
	MR-EKCBL5M-H	5 m	Long bending life	IP20	
Junction cable for fully closed loop control	MR-J4FCCBL03M	0.3 m	Standard	-	Branching a load-side encoder

Notes:

1. When using this cable for HK-KT/HK-MT/HK-RT (1.0 kW to 2.0 kW), use it in combination with MR-AEPB2J20CBL03M-_-L or MR-AEP2J20CBL03M-_-L.

Connector sets for rotary servo motors

Item	Model	Description	IP rating	Application
Encoder connector set	MR-ECNM (Note 1)	Encoder connector × 1 Servo amplifier connector × 1	IP20	HK-KT series HK-MT series HK-RT103(4)W, 153(4)W, 203(4)W Connecting a load-side encoder
	MR-J3SCNS (Note 2)	Junction connector or encoder connector × 1 Servo amplifier connector × 1	IP67	HK-KT series HK-MT series HK-ST series HK-RT series HK-JT701M(4)J, 11K1M(4)J, 15K1M(4)J (straight type) (one-touch connection type)
	MR-ENCNS2	Encoder connector × 1 Servo amplifier connector × 1	IP67	HK-ST series HK-RT353(4)W, 503(4)W, 703(4)W HK-JT701M(4)J, 11K1M(4)J, 15K1M(4)J (straight type) (screw type)
	MR-J3SCNSA	Encoder connector × 1 Servo amplifier connector × 1	IP67	HK-ST series HK-RT353(4)W, 503(4)W, 703(4)W HK-JT701M(4)J, 11K1M(4)J, 15K1M(4)J (angle type) (one-touch connection type)
	MR-ENCNS2A	Encoder connector × 1 Servo amplifier connector × 1	IP67	HK-ST series HK-RT353(4)W, 503(4)W, 703(4)W HK-JT701M(4)J, 11K1M(4)J, 15K1M(4)J (angle type) (screw type)
	MR-ENECNS	Encoder connector × 1 Servo amplifier connector × 1	IP67	HK-JT15K1J, 22K1M(4)J
Power connector set	MR-APWCNS4	Power connector × 1	IP67	HK-ST52(4)(W), 102(4)(W), 172(4)W, 202(4)AW, 302(4)W, 353(4)W, 503(4)W (Note 3) (one-touch connection type)
	MR-APWCNS5	Power connector × 1	IP67	HK-ST7M2UW, 172UW, 202(4)(W), 352(4)(W), 502(4)(W), 702(4)(W) HK-RT353(4)W, 503(4)W, 703(4)W (one-touch connection type)
	MR-APWCNS3	Power connector × 1	IP67	HK-JT701M(4)J, 11K1M(4)J, 15K1M(4)J (one-touch connection type)

Notes:

1. When using this connector set for HK-KT series/HK-MT series/HK-RT (1.0 kW to 2.0 kW) series, use it in combination with MR-AEPB2J10CBL03M-_-L or MR-AEP2J10CBL03M-_-L.
2. When using this connector set for HK-KT series/HK-MT series/HK-RT (1.0 kW to 2.0 kW) series, use it in combination with MR-AEPB2J20CBL03M-_-L or MR-AEP2J20CBL03M-_-L.
3. When using HK-ST503W for a machine that is required to comply with UL/CSA standards, do not use MR-APWCNS4. Use a cable (SC-PWC403C_M-SBLL or SC-PWC403C_M-SBLH) manufactured by Mitsubishi Electric System & Service Co., Ltd., and fabricate an extension cable with wires of AWG 10. For details of SC-PWC403C_M-SBLL and SC-PWC403C_M-SBLH, please contact Mitsubishi Electric System & Service Co., Ltd. OVERSEAS SERVICE SECTION. (Email: osb.webmaster@melsc.jp)

Connector sets for rotary servo motors

Item	Model	Description	IP rating	Application
Electromagnetic brake connector set	MR-BKCNS1	Electromagnetic brake connector × 1	IP67	HK-ST series HK-RT353(4)WB, 503(4)WB, 703(4)WB (straight type) (one-touch connection type)
	MR-BKCNS2	Electromagnetic brake connector × 1	IP67	HK-ST series HK-RT353(4)WB, 503(4)WB, 703(4)WB (straight type) (screw type)
	MR-BKCNS1A	Electromagnetic brake connector × 1	IP67	HK-ST series HK-RT353(4)WB, 503(4)WB, 703(4)WB (angle type) (one-touch connection type)
	MR-BKCNS2A	Electromagnetic brake connector × 1	IP67	HK-ST series HK-RT353(4)WB, 503(4)WB, 703(4)WB (angle type) (screw type)
	MR-BKCN	Electromagnetic brake connector × 1	IP67	HK-JT701M(4)BJ, 11K1M(4)BJ, 15K1M(4)BJ (straight type)
Cooling fan power connector set	MR-PWCNF	Power connector × 1	IP67	HK-JT15K1J, 22K1M(4)J
Encoder connector set	MR-J3CN2	Servo amplifier connector × 1	-	Connecting a load side encoder
Connector set	MR-J3THMCN2	Junction connector × 2 Servo amplifier connector × 1	-	Branching a load-side encoder

Cables and connector sets for linear servo motors

Item	Model	Description		IP rating	Application
Encoder cable	MR-EKCBL2M-H	2 m	Long bending life	IP20	Connecting a linear encoder
	MR-EKCBL5M-H	5 m	Long bending life	IP20	
Junction cable for linear servo motors	MR-J4THCBL03M	0.3 m	Standard	-	Branching a thermistor
Encoder connector set	MR-ECNM	Junction connector × 1 Servo amplifier connector × 1		IP20	Connecting a linear encoder
	MR-J3CN2	Servo amplifier connector × 1		-	Connecting a linear encoder or a thermistor
Connector set	MR-J3THMCN2	Junction connector × 2 Servo amplifier connector × 1		-	Branching a thermistor

Connector sets for direct drive motors

Item	Model	Description	IP rating	Application
Encoder connector set	MR-J3DDCNS	Encoder connector or absolute position storage unit connector × 1 Servo amplifier connector × 1	IP67	TM-RG2M series TM-RU2M series TM-RFM series (For connecting a direct drive motor and a servo amplifier, or an absolute position storage unit and a servo amplifier)
	MR-J3DDSPS	Encoder connector × 1 Absolute position storage unit connector × 1	IP67	TM-RG2M series TM-RU2M series TM-RFM series (For connecting a direct drive motor and an absolute position storage unit)
Power connector set	MR-PWCNF	Power connector × 1	IP67	TM-RG2M series TM-RU2M series TM-RFM_C20 TM-RFM_E20
	MR-PWCNS4	Power connector × 1	IP67	TM-RFM_G20
	MR-PWCNS5	Power connector × 1	IP67	TM-RFM040J10, TM-RFM120J10
	MR-PWCNS3	Power connector × 1	IP67	TM-RFM240J10

Connectors for servo amplifiers/drive units

Item	Model	Description	IP rating	Application (Note 1)
Connector set	MR-CCN1	Servo amplifier connector × 1	-	MR-J5-_G_/MR-J5-_B_
	MR-J2CMP2	Servo amplifier connector × 1	-	MR-J5W_-_G/MR-J5W_-_B
	MR-ECN1	Servo amplifier connector × 20	-	
	MR-ADCN3	Drive unit connector × 1	-	MR-J5D_-_G4
	MR-J3CN1	Servo amplifier connector × 1	-	MR-J5-_A_
	MR-CVCN24S	Power regeneration converter unit connector × 1	-	MR-CV_

SSCNET III cables/SSCNET III connector set

Item	Model	Length	Bending life	Application
SSCNET III cable (standard cord inside cabinet) compatible with SSCNET III/H	MR-J3BUS015M	0.15 m	Standard	MR-J5-_B_ /MR-J5W_-_B
	MR-J3BUS03M	0.3 m	Standard	MR-J5-_B_ /MR-J5W_-_B
	MR-J3BUS05M	0.5 m	Standard	MR-J5-_B_ /MR-J5W_-_B
	MR-J3BUS1M	1 m	Standard	MR-J5-_B_ /MR-J5W_-_B
	MR-J3BUS3M	3 m	Standard	MR-J5-_B_ /MR-J5W_-_B
SSCNET III cable (standard cable outside cabinet) compatible with SSCNET III/H	MR-J3BUS5M-A	5 m	Standard	MR-J5-_B_ /MR-J5W_-_B
	MR-J3BUS10M-A	10 m	Standard	MR-J5-_B_ /MR-J5W_-_B
	MR-J3BUS20M-A	20 m	Standard	MR-J5-_B_ /MR-J5W_-_B
SSCNET III cable (long distance cable) compatible with SSCNET III/H	MR-J3BUS30M-B	30 m	Long bending life	MR-J5-_B_ /MR-J5W_-_B
	MR-J3BUS40M-B	40 m	Long bending life	MR-J5-_B_ /MR-J5W_-_B
	MR-J3BUS50M-B	50 m	Long bending life	MR-J5-_B_ /MR-J5W_-_B
SSCNET III connector set compatible with SSCNET III/H	MR-J3BCN1	-	-	MR-J5-_B_ /MR-J5W_-_B

Bus bars

Item	Model	Length	Application (Note 1)
Bus bar	MR-DCBAR077-B02	-	Connecting between power regeneration converter unit and drive unit, and between drive units
	MR-DCBAR092-B02	-	
	MR-DCBAR097-B02	-	Connecting between power regeneration converter unit and drive unit
	MR-DCBAR112-B02	-	
	MR-DCBAR099-B03	-	
	MR-DCBAR114-B03	-	
Adjustment bar (Note 2)	MR-DCBAR024-B05	-	-

Notes:

1. Note that options/peripheral equipment necessary for servo amplifiers with special specifications are the same as those for standard servo amplifiers. Refer to the servo amplifiers with the same rated output.
2. When an even number of MR-J5D_-G4 drive units is connected to the power regeneration converter unit, use the adjustment bars. Each of the bar models in the table includes a set of two bus bars.

Junction terminal blocks/Junction terminal block cables

Item	Model	Length	Application (Note 1)
Junction terminal block (26 pins)	MR-TB26A	-	MR-J5W_-_G/MR-J5W_-_B
Junction terminal block (50 pins)	MR-TB50	-	MR-J5-_A_
Junction terminal block cable	MR-J2HBUS05M	0.5 m	Connecting MR-J5-_G_/MR-J5-_B_ and PS7DW-20V14B-F
	MR-J2HBUS1M	1 m	
	MR-J2HBUS5M	5 m	
	MR-TBNATBL05M	0.5 m	Connecting MR-J5W_-_G/MR-J5W_-_B and MR-TB26A
	MR-TBNATBL1M	1 m	
	MR-J2M-CN1TBL05M	0.5 m	Connecting MR-J5-_A_ and MR-TB50
	MR-J2M-CN1TBL1M	1 m	

Batteries/Battery cases/Battery cables

Item	Model	Length	Application (Note 1)
Battery	MR-BAT6V1SET	-	MR-J5-_G_/MR-J5-_B_/MR-J5-_A_
	MR-BAT6V1SET-A	-	
	MR-BAT6V1	-	MR-BAT6V1SET, MR-BAT6V1SET-A, MR-BT6VCASE
Battery case	MR-BT6VCASE	-	MR-J5-_G_/MR-J5W_-_G/MR-J5-_B_/MR-J5W_-_B/MR-J5-_A
Battery cable	MR-BT6V1CBL03M	0.3 m	Connecting MR-J5-_G_/MR-J5W_-_G/MR-J5-_B_/MR-J5W_-_B/MR-J5-_A with MR-BT6VCASE
	MR-BT6V1CBL1M	1 m	
Junction battery cable	MR-BT6V2CBL03M	0.3 m	MR-J5-_G_/MR-J5W_-_G/MR-J5-_B_/MR-J5W_-_B/MR-J5-_A
	MR-BT6V2CBL1M	1 m	

Regenerative options

Item	Model	Permissible regenerative power	Resistance value	Application (Note 1)
Regenerative option (200 V)	MR-RB032	30 W	40 Ω	MR-J5-10G/B/A to 60G/B/A
	MR-RB12	100 W	40 Ω	MR-J5-20G/B/A to 60G/B/A
	MR-RB14	100 W	26 Ω	MR-J5-70G/B/A, 100G/B/A MR-J5W2-22G/B, 44G/B MR-J5W3-222G/B, 444G/B
	MR-RB30	300 W	13 Ω	MR-J5-200G/B/A
	MR-RB3N	300 W	9 Ω	MR-J5-350G/B/A MR-J5W2-77G/B, 1010G/B
	MR-RB31	300 W	6.7 Ω	MR-J5-500G/B/A
	MR-RB3Z	300 W	5.5 Ω	MR-J5-700G/B/A
	MR-RB34	300 W	26 Ω	MR-J5-70G/B/A, 100G/B/A MR-J5W3-222G/B, 444G/B
	MR-RB50	500 W	13 Ω	MR-J5-200G/B/A
	MR-RB5N	500 W	9 Ω	MR-J5-350G/B/A
	MR-RB51	500 W	6.7 Ω	MR-J5-500G/B/A
	MR-RB5Z	500 W	5.5 Ω	MR-J5-700G/B/A
	MR-RB5R	500 (800) W	3.2 Ω	MR-J5-12KG/B/A
	MR-RB9F	850 (1300) W	3 Ω	MR-J5-17KG/B/A
	MR-RB9T	850 (1300) W	2.5 Ω	MR-J5-25KG/B/A
Regenerative option (400 V)	MR-RB1H-4	100 W	82 Ω	MR-J5-60G4/B4/A4, 100G4/B4/A4
	MR-RB3M-4	300 W	120 Ω	MR-J5-60G4/B4/A4, 100G4/B4/A4
	MR-RB3G-4	300 W	47 Ω	MR-J5-200G4/B4/A4
	MR-RB3Y-4	300 W	36 Ω	MR-J5-350G4/B4/A4
	MR-RB34-4	300 W	26 Ω	MR-J5-500G4/B4/A4
	MR-RB3U-4	300 W	22 Ω	MR-J5-700G4/B4/A4
	MR-RB5G-4	500 W	47 Ω	MR-J5-200G4/B4/A4
	MR-RB5Y-4	500 W	36 Ω	MR-J5-350G4/B4/A4
	MR-RB54-4	500 W	26 Ω	MR-J5-500G4/B4/A4
	MR-RB5U-4	500 W	22 Ω	MR-J5-700G4/B4/A4
	MR-RB5K-4	500 (800) W	10 Ω	MR-J5-12KG4/B4/A4
	MR-RB6K-4	850 (1300) W	10 Ω	MR-J5-17KG4/B4/A4, 25KG4/B4/A4

Notes:

1. Note that options/peripheral equipment necessary for servo amplifiers with special specifications are the same as those for standard servo amplifiers. Refer to the servo amplifiers with the same rated output.

Peripheral units

Item	Model	Application (Note 1)
Safety logic unit	MR-J3-D05	MR-J5-_G_/MR-J5W_-_G/MR-J5D_-_G4/MR-J5-_B_/MR-J5W_-_B/MR-J5-_A_
Absolute position storage unit	MR-BTAS01	MR-J5-_G/MR-J5W_-_G/MR-J5-_B/MR-J5W_-_B/MR-J5-_A
Replacement fan unit	MR-J5-FAN1	MR-J5-70G/B/A, 100G/B/A
	MR-J5-FAN6	MR-J5-200G_/B_/A_, 350G_/B_/A_
	MR-J5-FAN3	MR-J5-500G/B/A
	MR-J5-FAN4	MR-J5-700G/B/A
	MR-J5-FAN7	MR-J5-500G4/B4/A4, 700G4/B4/A4
	MR-J5-FAN8	MR-J5-12KG_/B_/A_, 17KG_/B_/A_
	MR-J5-FAN9	MR-J5-25KG_/B_/A_
	MR-J5W-FAN1	MR-J5W2-44G/B
	MR-J5W-FAN3	MR-J5W2-77G/B, 1010G/B
	MR-J5W-FAN2	MR-J5W3-222G/B, 444G/B
	MR-J5D-FAN1	MR-J5D1-500G4, 700G4 MR-J5D2-200G4, 350G4 MR-J5D3-200G4
	MR-J5D-FAN2	MR-J5D2-500G4, 700G4
Dynamic brake (200 V)	DBU-11K	MR-J5-12KG/B/A
	DBU-15K	MR-J5-17KG/B/A
	DBU-22K-R1	MR-J5-25KG/B/A
Dynamic brake (400 V)	DBU-11K-4	MR-J5-12KG4/B4/A4
	DBU-22K-4	MR-J5-17KG4/B4/A4, 25KG4/B4/A4
Panel through attachment	MR-J4ACN15K	MR-J5-12KG_/B_/A_, 17KG_/B_/A_
	MR-J3ACN	MR-J5-25KG_/B_/A_
AC reactor	MR-AL-11K4	MR-CV11K4
	MR-AL-18K4	MR-CV18K4
	MR-AL-30K4	MR-CV30K4
	MR-AL-37K4	MR-CV37K4
	MR-AL-45K4	MR-CV45K4
	MR-AL-55K4	MR-CV55K4
	MR-AL-75K4	MR-CV75K4

Notes:
1. Note that options/peripheral equipment necessary for servo amplifiers with special specifications are the same as those for standard servo amplifiers. Refer to the servo amplifiers with the same rated output.

Peripheral cables/connector sets

Item	Model	Length	Application (Note 1)
Personal computer communication cable (USB cable)	MR-J3USBCBL3M	3 m	MR-J5-_G_/MR-J5W_-_G/MR-J5D_-_G4/ MR-J5-_B_/MR-J5W_-_B/MR-J5-_A_
Monitor cable	MR-ACN6CBL1M	1 m	MR-J5-_G_/MR-J5-_A_
	MR-J3CN6CBL1M	1 m	MR-J5W_-_G
Analog monitor and A/B/Z-phase pulse output cable	MR-AHSCN7CBL2M10M	10 m/ 2 m	MR-J5-_G_-HS
STO cable	MR-D05UDL3M-B	3 m	Connecting MR-J3-D05 or a safety control device with MR-J5-_G_/MR-J5W_-_G/MR-J5D_-_G4/MR-J5-_B_/MR-J5W_-_B/MR-J5-_A_
Protection coordination cable	MR-ACDL02M	0.2 m	Connecting between power regeneration converter unit and drive unit
	MR-ACDL05M	0.5 m	
	MR-ADDL02M	0.2 m	Connecting between drive units
Daisy chain power connector	MR-J5CNP12-J1	-	MR-J5-10G/B/A to MR-J5-100G/B/A MR-J5W2-22G/B, MR-J5W2-44G/B MR-J5W3-222G/B, and MR-J5W3-444G/B
	MR-J5CNP12-J2	-	MR-J5-200G/B/A MR-J5W2-77G/B, 1010G/B

Peripheral attachments

Item	Model	Description	Application (Note 1)
Cabinet-mounting attachment	J5-CHP07-10P	Components (1 pc.) Attachment × 1 Flat head screw (M4 × 10) × 1 Packing quantity: 10 pcs./packing	MR-J5-10G_/B_/A_ to 350G_/B_/A_ MR-J5W_-_G/B MR-CM3K
Grounding terminal attachment	J5-CHP08	Attachment × 1 Cable clamp × 2 Screw (M4 × 12) × 4	MR-J5-10G_/B_/A_ to 350G_/B_/A_
Shield clamp attachment	MR-ASCHP06	Attachment × 1 Cable clamp × 2 Flat head screw (M4) × 2	MR-J5-500G4/B4/A4, 700G4/B4/A4
Mounting attachment (Power regeneration converter unit attachment)	MR-ADCACN090	Attachment × 1	MR-CV11K4, 18K4
	MR-ADCACN150	Attachment × 1	MR-CV30K4 to 45K4
	MR-ADCACN300	Attachment × 1	MR-CV55K4 to 75K4
Mounting attachment (Drive unit attachment)	MR-ADACN060	Attachment × 1	MR-J5D1-100G4 to 700G4, MR-J5D2-100G4 to 350G4, MR-J5D3-100G4, 200G4
	MR-ADACN075	Attachment × 1	MR-J5D2-500G4, 700G4
Side protection cover	MR-J5DCASE01	Side protection cover × 1	MR-J5D_-_G4

Notes:

1. Note that options/peripheral equipment necessary for servo amplifiers with special specifications are the same as those for standard servo amplifiers. Refer to the servo amplifiers with the same rated output.

Engineering software

Item	Model	Description
MELSOFT iQ Works	SW2DND-IQWK-EC	FA engineering software (site license (Note 2))
MELSOFT GX Works3	SW1DND-GXW3-EC	Programmable controller engineering software (including motion control setting) (site license (Note 2))
MELSOFT MT Works2	SW1DND-MTW2-EC	Motion controller engineering software (site license (Note 2))
MELSOFT MR Configurator2 (Note1)	SW1DND-MRC2-EC	Servo engineering software (site license (Note 2))

Notes:

1. MR Configurator2 can be obtained by either of the following:
   • Purchase MR Configurator2 alone.
   • Purchase GX Works3 or MT Works2: MR Configurator2 is included in GX Works3 and MT Works2 with software version 1.34L or later.
2. Anyone can use the product as long as that person belongs to the business office (including overseas offices) of the corporation that purchased the product, or to the same public vocational training facility or other educational institution as the corporation.

For your safety

- To use the products given in this catalog safely, read the User's Manuals and the appended document prior to use.
- In this catalog, the safety instruction levels are classified into "WARNING" and "CAUTION".

⚠WARNING	Indicates that incorrect handling may cause hazardous conditions, resulting in death or severe injury.
⚠CAUTION	Indicates that incorrect handling may cause hazardous conditions, resulting in medium or slight injury.

Note that the CAUTION level may lead to a serious consequence depending on conditions.
Please follow the instructions of both levels because they are important to personnel safety.
In the following precautions, a term of servo amplifier includes a combination of a drive unit and a converter unit.

Safety instructions

⚠WARNING

[Wiring]

- To prevent an electric shock, turn off the servo amplifier power and wait for 15 minutes or more before starting wiring and/or inspection. For the drive unit, wait for 20 minutes or more before starting wiring and/or inspection.
- To prevent an electric shock, ground the servo amplifier.
- To prevent an electric shock, any person who is involved in wiring should be fully competent to do the work.
- To prevent an electric shock, mount the servo amplifier and the servo motor before wiring.
- To prevent an electric shock, connect the grounding wire to the cabinet protective earth (PE) terminal via the servo amplifier protective earth (PE) terminal.
- To prevent an electric shock, do not touch the conductive parts.
- To prevent an electric shock and burn injury, do not operate the servo amplifier and the servo motor with wet hands.

[Operation]

- To prevent an electric shock and burn injury, do not operate the servo amplifier and the servo motor with wet hands.

[Maintenance]

- To prevent an electric shock, any person who is involved in wiring should be fully competent to do the work.
- To prevent an electric shock and burn injury, do not operate the servo amplifier and the servo motor with wet hands.

⚠CAUTION

[Transportation/installation]

- To prevent injury, transport the products correctly according to their mass.
- To prevent injury, do not touch the sharp edges of the servo motor, shaft keyway, or others with bare hands when handling the servo motor.
- For the linear servo motor, attraction force is generated between the permanent magnet on the secondary side and the magnetic materials. To prevent injury to fingers and other body parts due to the attraction force between the secondary side and the magnetic material side, take special care in handling the linear servo motor.

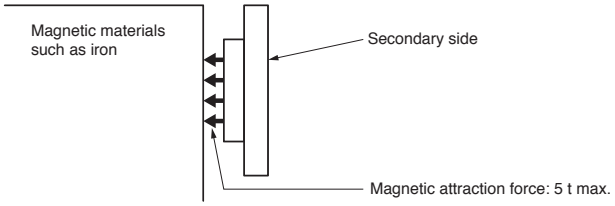

[Operation]

- To prevent injury, do not touch the rotor of the servo motor during operation.

[Disposal of linear servo motors]

- To prevent burn injury, do not touch the secondary side after the demagnetization of the secondary side by heating over 300 ˚C until it becomes cool enough.

For proper use

- To use the products given in this catalog properly, read the User's Manuals and the appended document prior to use.
- In this catalog, instructions for incorrect handling which may cause physical damage, instructions for other functions, and so on are classified into "NOTICES".
- In the following precautions, a term of servo amplifier includes a combination of a drive unit and a converter unit.

ⓘ NOTICES

[Model selection]

- Select a rotary servo motor or a direct drive motor which has the rated torque equal to or higher than the continuous effective torque.
- Select a linear servo motor which has the continuous thrust equal to or higher than the continuous effective load thrust.
- When the linear servo motor is used for vertical axis, it is necessary to have an anti-drop mechanism using springs and counter balances in the machine side.
- For the system where the unbalanced torque occurs, such as a vertical axis, the unbalanced torque of the machine should be kept at 70 % or lower of the rated torque.
- Create operation patterns by considering the settling time (ts) to complete positioning.
- Load to motor inertia ratio or load to mass ratio must be below the recommended ratio. If the ratio is too large, the expected performance may not be achieved, and the dynamic brake may be damaged.

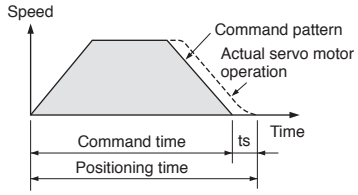

- Use the servo motor with the specified servo amplifier.

[Transportation/installation]

- To prevent a malfunction, do not drop or strike the servo amplifier and servo motor.
- When fumigants that contain halogen materials, such as fluorine, chlorine, bromine, and iodine, are used for disinfecting and protecting wooden packaging from insects, they cause a malfunction when entering our products. Please take necessary precautions to ensure that any residual materials from fumigant do not enter our products, or perform disinfection and pest control using methods other than fumigation, such as heat treatment. Perform disinfection and pest control at timbering stage before packing the products.
- Do not get on or place heavy objects on the servo amplifier or the servo motor.
- The system must withstand high speeds and high acceleration/deceleration.
- To enable high-accuracy positioning, ensure the machine rigidity, and keep the machine resonance point at a high level.
- Install the servo amplifier and the servo motor on incombustible material. Installing them directly or close to combustibles will lead to smoke or a fire. In addition, the servo amplifier must be installed in a metal cabinet.
- The regenerative option becomes hot (the temperature rise of 100 °C or higher) with frequent use. Do not install within combustibles or objects subject to thermal deformation. Make sure that wires do not come into contact with the unit.
- Securely fix the servo motor onto the machine. If attached insecurely, the motor may come off during operation.
- Install electrical and mechanical stoppers at the stroke end.
- Mount the servo amplifier on a perpendicular wall in the correct vertical direction.
- To prevent a malfunction, do not block the intake and exhaust areas of the servo amplifier.
- When installing multiple servo amplifiers in a row in a sealed cabinet, leave space around the servo amplifiers as described in User's Manuals. To ensure the service life and reliability of the servo amplifiers, prevent heat accumulation by keeping space as open as possible toward the top plate.
- Do not disassemble, repair, or modify the product.

[Environment]

- Use the servo amplifier and the servo motor in the designated environment.
- Avoid installing the servo amplifier and the servo motor in areas with oil mist or dust. When installing in such areas, enclose the servo amplifier in a sealed cabinet, and protect the servo motor by furnishing a cover or by taking similar measures.
- In the condition where cutting fluid or lubricating oil are constantly applied, and condensation occurs due to excessive humidity, continuous operation of the servo motor for a long period of time may result in the deterioration on the insulation of the servo motor. Provide measures such as oil proof, dust proof cover, and dew condensation prevention to protect the servo motor.
- To prevent a malfunction or a failure, do not use the servo system products under a strong electric field, magnetic field, or radiation environment.

[Wiring]

- To prevent a fire, use a molded-case circuit breaker or a fuse for the main circuit power supply (L1/L2/L3) of the servo amplifier.
- Connect a magnetic contactor between the power supply and the main circuit power supply (L1/L2/L3) of the servo amplifier so that the main circuit power supply can be shut off when a malfunction or an alarm occurs in the servo amplifier.
- The grounding must be connected to prevent faults such as a position mismatch.
- Do not supply power to the output terminals (U/V/W) of the servo amplifier or the input terminals (U/V/W) of the servo motor. Doing so damages the servo amplifier and the servo motor.
- To prevent abnormal operation and malfunction, connect the servo amplifier power outputs (U/V/W) to the servo motor power inputs (U/V/W) directly. Do not connect a magnetic contactor and others between them.
- The phases (U/V/W) of the servo amplifier power outputs and the phases (U/V/W) of the servo motor power inputs should match with each other.
- Check the wiring and sequence program thoroughly before switching the power on.
- Carefully select the cable clamping method, and make sure that bending stress and the stress of the cable's own weight are not applied on the cable connection section.
- In an application where the servo motor moves, determine the cable bending radius based on the cable bending life and wire type.
- To prevent malfunction, avoid bundling the servo amplifier's power lines (input/output) and signal cables together or running them in parallel to each other. Separate the power lines from the signal cables.
- Do not apply excessive tension on the cable when cabling.

- The minimum bending radius of the SSCNET III cable is 25 mm for MR-J3BUS_M and 50 mm for MR-J3BUS_M-A/-B. If using these cables under the minimum bending radius, performance cannot be guaranteed.
- If the ends of the SSCNET III cable are dirty, the light will be obstructed, causing malfunctions. Keep the ends clean.
- Do not tighten the SSCNET III cable with cable ties, etc.
- Do not look at the light directly when the SSCNET III cable is not connected.
- To prevent heat generation and ignition of wires, use the wires given in this catalog or equivalent products.

[Initial settings]

- For MR-J5-A_, select a control mode from position, speed or torque with [Pr. PA01.0]. Position control mode is set as default. Change the parameter setting value when using the other control modes. For MR-J5_-G_ and MR-J5_-B_, the control mode is set by the controller.
- When using the regenerative option, change [Pr. PA02.0-1]. The regenerative option is disabled as default.

[Operation]

- Do not use a product which is damaged or has missing parts. In that case, replace the product.
- Turn on the stroke limit signals (FLS/RLS), or the stroke end signals (LSP/LSN) in position or speed control mode. The servo motor will not start if the signals are off.
- When a magnetic contactor is installed on the primary side of the servo amplifier, do not perform frequent starts and stops with the magnetic contactor. Doing so may damage the servo amplifier.
- Do not use the dynamic brake to stop in a normal operation as it is the function to stop in emergency.
- Note that the number of operation times of the dynamic brake is limited. For example, when a machine operates at the recommended load to motor inertia ratio or less and decelerates from the rated speed to a stop once in 10 minutes, the estimated number of operation times is 1000.
- If the protective functions of the servo amplifier activate, turn the power off immediately. Remove the cause before turning the power on again.
- The servo amplifier, the regenerative resistor, and the servo motor can be very hot. Take safety measures such as covering them.
  In addition, do not directly touch the servo amplifier, the regenerative resistor, and the servo motor during or right after operation.

[Maintenance]

- When an error occurs, ensure safety by turning the power off, etc., before dealing with the error. Otherwise, it may cause an accident.
- Before wiring or inspection, turn off the power, wait for 15 minutes or more until the charge light turns off, and then check the voltage between P+ and N- with a voltage tester. For the drive unit, turn off the power, wait for 20 minutes or more until the charge light turns off, and then check the voltage between L+ and L- with a voltage tester.
- In a maintenance inspection, make sure that the emergency stop circuit operates properly such that an operation can be stopped immediately and a power can be shut off by the emergency stop switch.

[Use of rotary servo motors and direct drive motors]

- To prevent a malfunction on the encoder, do not apply shocks, e.g. hit with a hammer, when coupling the shaft end of the rotary drive motor.
- When mounting a pulley to the rotary servo motor with a keyed shaft, use the screw hole in the shaft end.
- When removing the pulley, use a pulley remover to protect the shaft from excessive load and impact.
- Do not apply a load exceeding the tolerable load onto the rotary servo motor shaft or the direct drive motor rotor. The shaft or the rotor may break.
- When the rotary servo motor is mounted with the shaft vertical (shaft up), provide measures so that the servo motor is not exposed to oil and water entering from the machine side, gear box, etc.
- Mount the rotary servo motor in the specified direction.
- When the direct drive motor is used in a machine such as vertical axis which generates unbalanced torque, use it in absolute position detection system.
- Do not use the 24 V DC interface power supply for the electromagnetic brake. To prevent malfunction, use the power supply designed exclusively for the electromagnetic brake.
- Do not apply the electromagnetic brake when the servo is on. Doing so may cause the servo amplifier overload or shorten the brake life. Apply the electromagnetic brake when the servo is off.
- Torque may drop due to temperature increase of the rotary servo motor or the direct drive motor. Use the motor within the specified ambient temperature.
- The temperature rise of the rotary servo motors and the direct drive motors varies depending on the installation environment and the operation conditions. Conduct a test run on the servo motors before an actual operation to make sure that no alarm occurs.

[Use of linear encoders]

- When the linear encoder is incorrectly installed, an alarm or a position mismatch may occur. In this case, refer to the following checking points for the linear encoder to check the mounting condition.
- Checking points for the linear encoder
  (a) Check that the gap between the head and scale is proper.
  (b) Check the scale head for rolling and yawing (decrease in rigidity of scale head section).
  (c) Check the scale surface for dust and scratches.
  (d) Check that the vibration and temperature are within the specified range.
  (e) Check that the speed is within the permissible range without overshooting.

[Use of linear servo motors]

- The linear servo system uses powerful magnets on the secondary side. Magnetic force is inversely proportional to the square of the distance from the magnetic material. Therefore, the magnetic force will be significantly stronger as closer to the magnetic material. When mounting the secondary side of linear servo motor, ensure the sufficient distance from the magnetic bodies around it and securely fix those magnetic bodies.
- One who uses a medical device like a pacemaker must keep away from the product and equipment.
- Do not wear metals such as watches, pierced earrings, necklaces, etc.
- Do not put magnetic cards, watches, portable phones, etc. close to the motor.
- Place a caution sign such as "CAUTION! POWERFUL MAGNET" to give warning against the machine.
- Use non-magnetic tools, when installing or working near the linear servo motor.
  e.g., explosion-proof beryllium copper alloy safety tools
  (BEALON manufactured by NGK Insulators, Ltd.)
- If the linear servo motor is used in such an environment where there is magnetic powder, the powder may adhere to the permanent magnets of the secondary side and cause a damage. In that case, take measures to prevent the magnetic powder or pieces from being attracted to the permanent magnets of the secondary side or from going into the gap between primary side and secondary side.
- The linear servo motor is rated IP00. Provide protection measures to prevent dust and oil, etc., as necessary.
- Install the linear servo motor so that the thrust is applied to the center of gravity of the moving part. Failing to do so will cause a moment to occur.
- The cables such as the power cable deriving from the primary side cannot withstand the long-term bending action. Avoid the bending action by fixing the cables to the moving part or others. Also, use the cable that can withstand the long-term bending action for the wiring to the servo amplifier.
- Increase in the temperature of the linear servo motor causes a thrust drop. Use the motor within the specified ambient temperature.

[Disposal of linear servo motors]

- Dispose the primary side as industrial waste.
- Demagnetize the secondary side with a heat of 300 °C or higher, and dispose as industrial waste.
- Do not leave the product unattended.

For safety enhancement

When the MELSERVO-J5 series servo amplifiers, servo motors, options, and peripheral equipment are installed in machines/systems, make sure the machines/systems conform to relevant standards and regulations. The entire system shall observe the following:

(1) For safety circuits, use parts and/or devices whose safety are confirmed or which comply with safety standards for the application.
(2) For details regarding the use of the servo amplifiers and other cautionary information, refer to relevant User's Manuals.
(3) Perform risk assessment on the entire machine/system. Using Certification Body for final safety certification is recommended.

Servo system controller

Warranty

1. Warranty period and coverage

We will repair any failure or defect hereinafter referred to as "failure" in our FA equipment hereinafter referred to as the "Product" arisen during warranty period at no charge due to causes for which we are responsible through the distributor from which you purchased the Product or our service provider. However, we will charge the actual cost of dispatching our engineer for an on-site repair work on request by customer in Japan or overseas countries. We are not responsible for any on-site readjustment and/or trial run that may be required after a defective unit is repaired or replaced.

[Term]

For terms of warranty, please contact your original place of purchase.

[Limitations]

(1) You are requested to conduct an initial failure diagnosis by yourself, as a general rule.
It can also be carried out by us or our service company upon your request and the actual cost will be charged.
However, it will not be charged if we are responsible for the cause of the failure.

(2) This limited warranty applies only when the condition, method, environment, etc. of use are in compliance with the terms and conditions and instructions that are set forth in the instruction manual and user manual for the Product and the caution label affixed to the Product.

(3) Even during the term of warranty, the repair cost will be charged on you in the following cases;
  (i) a failure caused by your improper storing or handling, carelessness or negligence, etc., and a failure caused by your hardware or software problem
  (ii) a failure caused by any alteration, etc. to the Product made on your side without our approval
  (iii) a failure which may be regarded as avoidable, if your equipment in which the Product is incorporated is equipped with a safety device required by applicable laws and has any function or structure considered to be indispensable according to a common sense in the industry
  (iv) a failure which may be regarded as avoidable if consumable parts designated in the instruction manual, etc. are duly maintained and replaced
  (v) any replacement of consumable parts (battery, fan, smoothing capacitor, etc.)
  (vi) a failure caused by external factors such as inevitable accidents, including without limitation fire and abnormal fluctuation of voltage, and acts of God, including without limitation earthquake, lightning and natural disasters
  (vii) a failure generated by an unforeseeable cause with a scientific technology that was not available at the time of the shipment of the Product from our company
  (viii) any other failures which we are not responsible for or which you acknowledge we are not responsible for

2. Term of warranty after the stop of production

(1) We may accept the repair at charge for another seven (7) years after the production of the product is discontinued. The announcement of the stop of production for each model can be seen in our Sales and Service, etc.

(2) Please note that the Product (including its spare parts) cannot be ordered after its stop of production.

3. Service in overseas countries

Our regional FA Center in overseas countries will accept the repair work of the Product. However, the terms and conditions of the repair work may differ depending on each FA Center. Please ask your local FA Center for details.

4. Exclusion of loss in opportunity and secondary loss from warranty liability

Regardless of the gratis warranty term, Mitsubishi shall not be liable for compensation to:

(1) Damages caused by any cause found not to be the responsibility of Mitsubishi.

(2) Loss in opportunity, lost profits incurred to the user by Failures of Mitsubishi products.

(3) Special damages and secondary damages whether foreseeable or not, compensation for accidents, and compensation for damages to products other than Mitsubishi products.

(4) Replacement by the user, maintenance of on-site equipment, start-up test run and other tasks.

5. Change of Product specifications

Specifications listed in our catalogs, manuals or technical documents may be changed without notice.

6. Application and use of the Product

(1) For the use of our servo system controller, its applications should be those that may not result in a serious damage even if any failure or malfunction occurs in the servo system controller, and a backup or fail-safe function should operate on an external system to the servo system controller when any failure or malfunction occurs.

(2) Our servo system controller is designed and manufactured as general purpose product for use at general industries.
Therefore, applications substantially influential on the public interest for such as atomic power plants and other power plants of electric power companies, and also which require a special quality assurance system, including applications for railway companies and government or public offices are not recommended, and we assume no responsibility for any failure caused by these applications when used.
In addition, applications which may be substantially influential to human lives or properties for such as airlines, medical treatments, railway service, incineration and fuel systems, man-operated material handling equipment, entertainment machines, safety machines, etc. are not recommended, and we assume no responsibility for any failure caused by these applications when used.
We will review the acceptability of the abovementioned applications, if you agree not to require a specific quality for a specific application. Please contact us for consultation.

(3) Mitsubishi Electric shall have no responsibility or liability for any problems involving programmable controller trouble and system trouble caused by DoS attacks, unauthorized access, computer viruses, and other cyberattacks.

AC servo

Warranty

1. Warranty period and coverage

We will repair any failure or defect hereinafter referred to as "failure" in our FA equipment hereinafter referred to as the "Product" arisen during warranty period at no charge due to causes for which we are responsible through the distributor from which you purchased the Product or our service provider. However, we will charge the actual cost of dispatching our engineer for an on-site repair work on request by customer in Japan or overseas countries. We are not responsible for any on-site readjustment and/or trial run that may be required after a defective unit is repaired or replaced.

[Term]

For terms of warranty, please contact your original place of purchase.

[Limitations]

(1) You are requested to conduct an initial failure diagnosis by yourself, as a general rule. It can also be carried out by us or our service company upon your request and the actual cost will be charged. However, it will not be charged if we are responsible for the cause of the failure.

(2) This limited warranty applies only when the condition, method, environment, etc. of use are in compliance with the terms and conditions and instructions that are set forth in the instruction manual and user manual for the Product and the caution label affixed to the Product.

(3) Even during the term of warranty, the repair cost will be charged on you in the following cases;

(i) a failure caused by your improper storing or handling, carelessness or negligence, etc., and a failure caused by your hardware or software problem

(ii) a failure caused by any alteration, etc. to the Product made on your side without our approval

(iii) a failure which may be regarded as avoidable, if your equipment in which the Product is incorporated is equipped with a safety device required by applicable laws and has any function or structure considered to be indispensable according to a common sense in the industry

(iv) a failure which may be regarded as avoidable if consumable parts designated in the instruction manual, etc. are duly maintained and replaced

(v) any replacement of consumable parts (battery, fan, smoothing capacitor, etc.)

(vi) a failure caused by external factors such as inevitable accidents, including without limitation fire and abnormal fluctuation of voltage, and acts of God, including without limitation earthquake, lightning and natural disasters

(vii) a failure generated by an unforeseeable cause with a scientific technology that was not available at the time of the shipment of the Product from our company

(viii) any other failures which we are not responsible for or which you acknowledge we are not responsible for

2. Term of warranty after the stop of production

(1) We may accept the repair at charge for another seven (7) years after the production of the product is discontinued. The announcement of the stop of production for each model can be seen in our Sales and Service, etc.

(2) Please note that the Product (including its spare parts) cannot be ordered after its stop of production.

3. Service in overseas countries

Our regional FA Center in overseas countries will accept the repair work of the Product. However, the terms and conditions of the repair work may differ depending on each FA Center. Please ask your local FA Center for details.

4. Exclusion of loss in opportunity and secondary loss from warranty liability

Regardless of the gratis warranty term, Mitsubishi shall not be liable for compensation to:

(1) Damages caused by any cause found not to be the responsibility of Mitsubishi.

(2) Loss in opportunity, lost profits incurred to the user by Failures of Mitsubishi products.

(3) Special damages and secondary damages whether foreseeable or not, compensation for accidents, and compensation for damages to products other than Mitsubishi products.

(4) Replacement by the user, maintenance of on-site equipment, start-up test run and other tasks.

5. Change of Product specifications

Specifications listed in our catalogs, manuals or technical documents may be changed without notice.

6. Application and use of the Product

(1) For the use of our AC Servo, its applications should be those that may not result in a serious damage even if any failure or malfunction occurs in AC Servo, and a backup or fail-safe function should operate on an external system to AC Servo when any failure or malfunction occurs.

(2) Our AC Servo is designed and manufactured as a general purpose product for use at general industries. Therefore, applications substantially influential on the public interest for such as atomic power plants and other power plants of electric power companies, and also which require a special quality assurance system, including applications for railway companies and government or public offices are not recommended, and we assume no responsibility for any failure caused by these applications when used.
In addition, applications which may be substantially influential to human lives or properties for such as airlines, medical treatments, railway service, incineration and fuel systems, man-operated material handling equipment, entertainment machines, safety machines, etc. are not recommended, and we assume no responsibility for any failure caused by these applications when used.
We will review the acceptability of the abovementioned applications, if you agree not to require a specific quality for a specific application. Please contact us for consultation.

(3) Mitsubishi Electric shall have no responsibility or liability for any problems involving programmable controller trouble and system trouble caused by DoS attacks, unauthorized access, computer viruses, and other cyberattacks.

Extensive global support coverage providing expert help whenever needed

■ Global FA centers

EMEA

Europe FA Center
MITSUBISHI ELECTRIC EUROPE B.V. Polish Branch
Tel: +48-12-347-65-00

Germany FA Center
MITSUBISHI ELECTRIC EUROPE B.V. German Branch
Tel: +49-2102-486-0

UK FA Center
MITSUBISHI ELECTRIC EUROPE B.V. UK Branch
Tel: +44-1707-27-8780

Czech Republic FA Center
MITSUBISHI ELECTRIC EUROPE B.V. Czech Branch
Tel: +420-734-402-587

Italy FA Center
MITSUBISHI ELECTRIC EUROPE B.V. Italian Branch
Tel: +39-039-60531

Turkey FA Center
MITSUBISHI ELECTRIC TURKEY Elektrik Urunleri A.S.
Tel: +90-216-969-2500

Asia-Pacific

China

Beijing FA Center
MITSUBISHI ELECTRIC AUTOMATION (CHINA) LTD.
Beijing FA Center
Tel: +86-10-6518-8830

Guangzhou FA Center
MITSUBISHI ELECTRIC AUTOMATION (CHINA) LTD.
Guangzhou FA Center
Tel: +86-20-8923-6730

Shanghai FA Center
MITSUBISHI ELECTRIC AUTOMATION (CHINA) LTD.
Shanghai FA Center
Tel: +86-21-2322-3030

Tianjin FA Center
MITSUBISHI ELECTRIC AUTOMATION (CHINA) LTD.
Tianjin FA Center
Tel: +86-22-2813-1015

Taiwan

Taipei FA Center
MITSUBISHI ELECTRIC AUTOMATION (TAIWAN) CO., LTD.
Tel: +886-2-2299-9917

Korea

Korea FA Center
MITSUBISHI ELECTRIC AUTOMATION KOREA CO., LTD.
Tel: +82-2-3660-9630

Thailand

Thailand FA Center
MITSUBISHI ELECTRIC FACTORY AUTOMATION (THAILAND) CO., LTD.
Tel: +66-2682-6522 to 31

ASEAN

ASEAN FA Center
MITSUBISHI ELECTRIC ASIA PTE. LTD.
Tel: +65-6470-2475

Malaysia

Malaysia FA Center
Malaysia FA Center
Tel: +60-3-7626-5080

Indonesia

Indonesia FA Center
PT. MITSUBISHI ELECTRIC INDONESIA
Cikarang Office
Tel: +62-21-2961-7797

Vietnam

Hanoi FA Center
MITSUBISHI ELECTRIC VIETNAM COMPANY LIMITED
Hanoi Branch Office
Tel: +84-24-3937-8075

Ho Chi Minh FA Center
MITSUBISHI ELECTRIC VIETNAM COMPANY LIMITED
Tel: +84-28-3910-5945

Philippines

Philippines FA Center
MELCO Factory Automation Philippines Inc.
Tel: +63-(0)2-8256-8042

India

India Ahmedabad FA Center
MITSUBISHI ELECTRIC INDIA PVT. LTD.
Ahmedabad Branch
Tel: +91-7965120063

India Bangalore FA Center
MITSUBISHI ELECTRIC INDIA PVT. LTD.
Bangalore Branch
Tel: +91-80-4020-1600

India Chennai FA Center
MITSUBISHI ELECTRIC INDIA PVT. LTD.
Chennai Branch
Tel: +91-4445548772

India Coimbatore FA Center
MITSUBISHI ELECTRIC INDIA PVT. LTD.
Coimbatore Branch
Tel: +91-422-438-5606

India Gurgaon FA Center
MITSUBISHI ELECTRIC INDIA PVT. LTD.
Gurgaon Head Office
Tel: +91-124-463-0300

India Pune FA Center
MITSUBISHI ELECTRIC INDIA PVT. LTD.
Pune Branch
Tel: +91-20-2710-2000

Americas

USA

North America FA Center
MITSUBISHI ELECTRIC AUTOMATION, INC.
Tel: +1-847-478-2100

Mexico

Mexico City FA Center
MITSUBISHI ELECTRIC AUTOMATION, INC.
Mexico Branch
Tel: +52-55-3067-7500

Mexico FA Center
MITSUBISHI ELECTRIC AUTOMATION, INC.
Queretaro Office
Tel: +52-442-153-6014

Mexico Monterrey FA Center
MITSUBISHI ELECTRIC AUTOMATION, INC.
Monterrey Office
Tel: +52-55-3067-7599

Brazil

Brazil FA Center
MITSUBISHI ELECTRIC DO BRASIL COMERCIO E SERVICOS LTDA.
Tel: +55-11-4689-3000

MEMO

List of Instruction Manuals

Relevant manuals are listed below:

Servo System Controller

Manual name	Manual No.
MELSEC iQ-R Motion Module User's Manual (Application for Simple Motion Mode)	IB-0300572ENG
MELSEC iQ-R Motion Module (Simple Motion Mode) Function Block Reference	BCN-B62005-1040ENG
MELSEC iQ-R Motion Module User's Manual (Advanced Synchronous Control for Simple Motion Mode)	IB-0300575ENG
MELSEC iQ-R Motion Module User's Manual (Startup)	IB-0300406ENG
MELSEC iQ-R Motion Module User's Manual (Application)	IB-0300411ENG
MELSEC iQ-R Motion Module User's Manual (Network)	IB-0300426ENG
MELSEC iQ-R Programming Manual (Motion Module Instructions, Standard Functions/Function Blocks)	IB-0300431ENG
MELSEC iQ-R Programming Manual (Motion Control Function Blocks)	IB-0300533ENG
MELSEC iQ-F FX5 Motion Module/Simple Motion Module User's Manual (Startup)	IB-0300251ENG
MELSEC iQ-F FX5 Motion Module/Simple Motion Module User's Manual (Application)	IB-0300253ENG
MELSEC iQ-F FX5 Motion Module/Simple Motion Module User's Manual (Advanced Synchronous Control)	IB-0300255ENG
MELSEC iQ-F FX5 Motion Module User's Manual (CC-Link IE TSN)	IB-0300568ENG
MELSEC iQ-F FX5 Motion Module/Simple Motion Module Function Block Reference	BCN-B62005-719
Motion Control Software SWM-G User's Manual (Startup)	IB-0300562ENG
Motion Control Software SWM-G Operating Manual (SWMOS)	IB-0300563ENG
Motion Control Software SWM-G Operating Manual (EcConfigurator)	IB-0300617ENG
Motion Control Software SWM-G-W Manual	BCN-B62005-1136ENG
Motion Control Board User's Manual (Motion Control)	IB-0300599ENG
Motion Control Board User's Manual (Network)	IB-0300600ENG
Motion Control Board User's Manual (Motion API)	IB-0300601ENG
MELSOFT EM Motion SDK Installation Instructions	BCN-B62008-435
MELSEC iQ-R Motion Controller User's Manual	IB-0300235
MELSEC iQ-R Motion Controller Programming Manual (Common)	IB-0300237
MELSEC iQ-R Motion Controller Programming Manual (Program Design)	IB-0300239
MELSEC iQ-R Motion Controller Programming Manual (Positioning Control)	IB-0300241
MELSEC iQ-R Motion Controller Programming Manual (Advanced Synchronous Control)	IB-0300243
MELSEC iQ-R Motion Controller Programming Manual (Machine Control)	IB-0300309
MELSEC iQ-R Motion Controller Programming Manual (G-Code Control)	IB-0300371
MELSEC iQ-R Simple Motion Module User's Manual (Startup)	IB-0300245ENG
MELSEC iQ-R Simple Motion Module User's Manual (Application)	IB-0300247ENG
MELSEC iQ-R Simple Motion Module User's Manual (Advanced Synchronous Control)	IB-0300249ENG
MELSEC iQ-R Simple Motion Module Function Block Reference	BCN-B62005-691ENG
Q173D(S)CPU/Q172D(S)CPU Motion Controller User's Manual	IB-0300133
Q173D(S)CPU/Q172D(S)CPU Motion Controller Programming Manual (COMMON)	IB-0300134
Q173D(S)CPU/Q172D(S)CPU Motion Controller (SV13/SV22) Programming Manual (Motion SFC)	IB-0300135
Q173D(S)CPU/Q172D(S)CPU Motion Controller (SV13/SV22) Programming Manual (REAL MODE)	IB-0300136
Q173D(S)CPU/Q172D(S)CPU Motion Controller (SV22) Programming Manual (VIRTUAL MODE)	IB-0300137
Q173D(S)CPU/Q172D(S)CPU Motion Controller Programming Manual (Safety Observation)	IB-0300183
Q173DSCPU/Q172DSCPU Motion Controller (SV22) Programming Manual (Advanced Synchronous Control)	IB-0300198
Q170MSCPU User's Manual	IB-0300212
MELSEC-Q QD77MS Simple Motion Module User's Manual (Positioning Control)	IB-0300185
MELSEC-Q/L QD77MS/QD77GF/LD77MS/LD77MH Simple Motion Module User's Manual (Synchronous Control)	IB-0300174

Servo Amplifier

Manual name	Manual No.
MR-J5 User's Manual (Hardware)	SH-030298ENG
MR-J5 User's Manual (Function)	SH-030300ENG
MR-J5 User's Manual (Adjustment)	SH-030306ENG
MR-J5 User's Manual (Troubleshooting)	SH-030312ENG
MR-J5-G/MR-J5W-G User's Manual (Introduction)	SH-030294ENG
MR-J5-G/MR-J5W-G User's Manual (Parameters)	SH-030308ENG
MR-J5-G/MR-J5W-G User's Manual (Communication Function)	SH-030302ENG
MR-J5-G/MR-J5W-G User's Manual (Object Dictionary)	SH-030304ENG
MR-J5-G-N1/MR-J5W-G-N1 User's Manual (Introduction)	SH-030366ENG
MR-J5-G-N1/MR-J5W-G-N1 User's Manual (Communication Function)	SH-030371ENG
MR-J5-G-N1/MR-J5W-G-N1 User's Manual (Object Dictionary)	SH-030376ENG
MR-J5D User's Manual (Hardware)	IB-0300548ENG
MR-J5D-G User's Manual (Introduction)	IB-0300538ENG
MR-J5D-G-N1 User's Manual (Introduction)	IB-0300543ENG
MR-CV Power Regeneration Converter Unit User's Manual	IB-0300553ENG
MR-J5-B/MR-J5W-B User's Manual (Introduction)	IB-0300578ENG
MR-J5-B/MR-J5W-B User's Manual (Parameters)	IB-0300581ENG
MR-J5-A User's Manual (Introduction)	SH-030296ENG
MR-J5-A User's Manual (Parameters)	SH-030310ENG

Servo Motor

Manual name	Manual No.
Rotary Servo Motor User's Manual (For MR-J5)	SH-030314ENG
Linear Servo Motor User's Manual (LM-H3/LM-U2/LM-F/LM-K2)	SH-030316ENG
Linear Servo Motor User's Manual (LM-AJ/LM-AU)	IB-0300518ENG
Direct Drive Motor User's Manual	SH-030318ENG

Others

Manual name	Manual No.
EMC Installation Guidelines	IB-67310
MR-J5 Partner's Encoder User's Manual	SH-030320ENG

Android and Google Play are trademarks of Google LLC.
Apple, iPad, iPad Air, iPad mini, and App Store are trademarks of Apple Inc., registered in the U.S. and other countries.
Microsoft, Windows, Visual C++, Visual Studio, and IntelliSense are trademarks of the Microsoft group of companies.
Celeron, Intel, Intel Atom, Intel Core, and Pentium are trademarks of Intel Corporation and its subsidiaries.
EtherCAT is a registered trademark and patented technology, licensed by Beckhoff Automation GmbH, Germany.
EtherNet/IP is a trademark of ODVA, Inc.
PLCopen and related logos are registered trademarks of PLCopen.
All other company names and product names used in this document are trademarks or registered trademarks of their respective companies.
Trademark symbols such as "™" and "®" might be omitted in this document.

Precautions before use

This publication explains the typical features and functions of the products herein and does not provide restrictions or other information related to usage and module combinations. Before using the products, always read the product user manuals. Mitsubishi Electric will not be held liable for damage caused by factors found not to be the cause of Mitsubishi Electric; opportunity loss or lost profits caused by faults in Mitsubishi Electric products; damage, secondary damage, or accident compensation, whether foreseeable or not, caused by special factors; damage to products other than Mitsubishi Electric products; or any other duties.

⚠ For safe use

- To use the products given in this publication properly, always read the relevant manuals before beginning operation.
- The products have been manufactured as general-purpose parts for general industries, and are not designed or manufactured to be incorporated in a device or system used in purposes related to human life.
- Before using the products for special purposes such as nuclear power, electric power, aerospace, medicine or passenger-carrying vehicles, consult with Mitsubishi Electric.
- The products have been manufactured under strict quality control. However, when installing the products where major accidents or losses could occur if the products fail, install appropriate backup or fail-safe functions in the system.

Creating Solutions Together.





Low-voltage Power Distribution Products



Transformers, Med-voltage Distribution Products



Power Monitoring and Energy Saving Products



Power (UPS) and Environmental Products



Compact and Modular Controllers



Servos, Motors and Inverters



Visualization: HMIs



Edge Computing Products



Numerical Control (NC)



Collaborative and Industrial Robots



Processing machines: EDM, Lasers



SCADA, analytics and simulation software

Mitsubishi Electric's product lineup, from various controllers and drives to energy-saving devices and processing machines, all help you to automate your world. They are underpinned by software, innovative data monitoring, and modelling systems supported by advanced industrial networking and Edgecross IT/OT connectivity. Together with a worldwide partner ecosystem, Mitsubishi Electric factory automation (FA) has everything to make IoT and Digital Manufacturing a reality.

With a complete portfolio and comprehensive capabilities that combine synergies with diverse business units, Mitsubishi Electric provides a one-stop approach to how companies can tackle the shift to clean energy and energy conservation, carbon neutrality and sustainability, which are now a universal requirement of factories, buildings, and social infrastructure.

We at Mitsubishi Electric FA are your solution partners waiting to work with you as you take a step toward the realization of sustainable manufacturing and society through the application of automation.
Let's automate the world together!

Note: not all products are available in all countries

Country/Region	Sales office	
USA	Mitsubishi Electric Automation, Inc. 500 Corporate Woods Parkway, Vernon Hills, IL 60061, U.S.A.	Tel : +1-847-478-2100
Mexico	Mitsubishi Electric Automation, Inc. Mexico Branch Boulevard Miguel de Cervantes Saavedra 301, Torre Norte Piso 5, Int. 502, Ampliacion Granada, Miguel Hidalgo, Ciudad de Mexico, Mexico, C.P.11520	Tel : +52-55-3067-7500
Brazil	Mitsubishi Electric do Brasil Comercio e Servicos Ltda. Avenida Adelino Cardana, 293, 21 andar, Bethaville, Barueri SP, Brazil	Tel : +55-11-4689-3000
Germany	Mitsubishi Electric Europe B.V. German Branch Mitsubishi-Electric-Platz 1, 40882 Ratingen, Germany	Tel : +49-2102-486-0
UK	Mitsubishi Electric Europe B.V. UK Branch Travellers Lane, UK-Hatfield, Hertfordshire, AL10 8XB, U.K.	Tel : +44-1707-28-8780
Italy	Mitsubishi Electric Europe B.V. Italian Branch Campus, Energy Park Via Energy Park 14, Vimercate 20871 (MB) Italy	Tel : +39-039-60531
Spain	Mitsubishi Electric Europe B.V. Spanish Branch Carretera de Rubi, 76-80-Apdo. 420, E-08174 Sant Cugat del Valles (Barcelona), Spain	Tel : +34-935-65-3131
France	Mitsubishi Electric Europe B.V. French Branch 2, rue de l'Union-92565 Rueil-Malmaison Cedex-France	Tel : +33-1-55-68-55-68
Czech Republic	Mitsubishi Electric Europe B.V. Czech Branch, Prague Office Pekarska 621/7, 155 00 Praha 5, Czech Republic	Tel : +420-734-402-587
Poland	Mitsubishi Electric Europe B.V. Polish Branch ul. Krakowska 48, 32-083 Balice, Poland	Tel : +48-12-347-65-00
Sweden	Mitsubishi Electric Europe B.V. (Scandinavia) Hedvig Mollersgata 6, 223 55 Lund, Sweden	Tel : +46-8-625-10-00
Turkey	Mitsubishi Electric Turkey Elektrik Urunleri A.S. Serifali Mah. Kale Sok. No:41 Umraniye / Istanbul, Turkey	Tel : +90-216-969-2500
UAE	Mitsubishi Electric Europe B.V. Dubai Branch Dubai Silicon Oasis, P.O.BOX 341241, Dubai, U.A.E.	Tel : +971-4-3724716
South Africa	Adroit Technologies 20 Waterford Office Park, 189 Witkoppen Road, Fourways, South Africa	Tel : +27-11-658-8100
China	Mitsubishi Electric Automation (China) Ltd. Mitsubishi Electric Automation Center, No.1386 Hongqiao Road, Shanghai, China	Tel : +86-21-2322-3030
Taiwan	Mitsubishi Electric Automation (TAIWAN) Co., Ltd. 6F, No.105, Wugong 3rd Road, Wugu District, New Taipei City 248019, Taiwan	Tel : +886-2-2299-2499
Korea	Mitsubishi Electric Automation Korea Co., Ltd. 7F to 9F, Gangseo Hangang Xi-tower A, 401, Yangcheon-ro, Gangseo-Gu, Seoul, Korea	Tel : +82-2-6103-9474
Singapore	Mitsubishi Electric Asia Pte. Ltd. 307 Alexandra Road, Mitsubishi Electric Building, Singapore 159943	Tel : +65-6473-2486
Thailand	Mitsubishi Electric Factory Automation (Thailand) Co., Ltd. 101, True Digital Park Office, 5th Floor, Sukhumvit Road, Bang Chak, Prakanong, Bangkok, Thailand	Tel : +66-2092-8600
Indonesia	PT. Mitsubishi Electric Indonesia Gedung Jaya 8th Floor, JL. MH. Thamrin No.12, Jakarta Pusat 10340, Indonesia	Tel : +62-21-3192-6461
Vietnam	Mitsubishi Electric Vietnam Company Limited 11th & 12th Floor, Viettel Tower B, 285 Cach Mang Thang Tam Street, Ward 12, District 10, Ho Chi Minh City, Vietnam.	Tel : +84-28-3910-5945
India	Mitsubishi Electric India Pvt. Ltd. Pune Branch ICC-Devi Gaurav Technology Park, Unit no. 402, Fourth Floor, Survey no. 191-192 (P), Opp. Vallabh Nagar Bus Depot, Pune - 411018, Maharashtra, India	Tel : +91-20-4624-2100
Australia	Mitsubishi Electric Australia Pty. Ltd. 348 Victoria Road, P.O. Box 11, Rydalmere, N.S.W 2116, Australia	Tel : +61-2-9684-7777

e-F@ctory

Mitsubishi Electric's e-F@ctory concept utilizes both FA and IT technologies, to reduce the total cost of development, production and maintenance, with the aim of achieving manufacturing that is a "step ahead of the times". It is supported by the e-F@ctory Alliance Partners covering software, devices, and system integration, creating the optimal e-F@ctory architecture to meet the end users needs and investment plans.

e-F@ctory Alliance

MITSUBISHI ELECTRIC CORPORATION

HEAD OFFICE: TOKYO BLDG., 2-7-3, MARUNOUCHI, CHIYODA-KU, TOKYO 100-8310, JAPAN
NAGOYA WORKS: 1-14, YADA-MINAMI 5-CHOME, HIGASHI-KU, NAGOYA 461-8670, JAPAN

L(NA)03179ENG-K 2503 (IP)

New publication, effective March 2025
Specifications are subject to change without notice.